User Guide

sachtler

flowtech® 75 aktiv / 100 mm Tripod

# flowtech® 75 aktiv
# flowtech® 100

## Tripod

Part No. S2051-0006
S2052-0001

EN

www.sachtler.com

**Copyright © 2021**
All rights reserved.
Original Instructions: English

All rights reserved throughout the world. No part of this publication may be stored in a retrieval system, transmitted, copied or reproduced in any way, including, but not limited to, photocopy, photograph, magnetic or other record without the prior agreement and permission in writing of the Videndum Plc.

**Disclaimer**
The information contained in this publication is believed to be correct at the time of printing. Videndum Production Solutions reserves the right to make changes to the information or specifications without obligation to notify any person of such revision or changes. Changes will be incorporated in new versions of the publication.
We are making every effort to ensure that our publications are updated on a regular basis to reflect changes to product specifications and features. Should this publication not contain information on the core functionality of your product, please let us know. You may be able to access the latest revision of this publication from our website.
Videndum Production Solutions Ltd reserves the right to make changes to product design and functionality without notification.

**Trademarks**
All product trademarks and registered trademarks are the property of The Videndum Plc.
All other trademarks and registered trademarks are the property of their respective companies.

**Published by:**

Videndum Production Solutions
Supports Technical Publications Department
Email: publications@videndum.com

**Video tutorials are available, if required please contact support@videndum.com for further details.**

# Contents

**Safety** . . . . . 2
Warning symbols used in these instructions . . . . . 2
Health and Safety . . . . . 2
Mounting and Installation . . . . . 2
About this guide . . . . . 3
Intended use . . . . . 3
Warranty . . . . . 3
**About This Guide** . . . . . 3
**Operating Elements** . . . . . 4
**Installation** . . . . . 6
Setting up the Tripod . . . . . 6
Attach Optional Mid-Level Spreader flowtech75 . . 7
Attach Optional Mid-Level Spreader flowtech100 . 8
Operation of Mid-Level Spreader flowtech100 . . . 8
Attach Optional Ground Spreader flowtech . . . . . 10
Operation of Ground Spreader . . . . . 11
Closing Tripod with Ground Spreader . . . . . 12
Remove Foot from Spreader . . . . . 13
Cleaning. . . . . 13
Using Locks When no Spreader Used . . . . . 14
No Spreader Mode . . . . . 14
Spreader Mode . . . . . 14
Opening Tripod Legs . . . . . 15
Alternative Locking Method . . . . . 17
Close Tripod Legs . . . . . 18
**Accessories** . . . . . 18
Fit Supplied Attachment Mount . . . . . 18
Fit Optional Carry Strap . . . . . 19
Attach Optional Rubber Feet . . . . . 19
Fit Optional Carry Handle . . . . . 20
Fit Optional Rotating Carry Handle . . . . . 20
Operating the Rotating Carry Handle . . . . . 21
**Maintenance** . . . . . 21
Cleaning . . . . . 21
Flush the Tripod . . . . . 21
Hinge Lock Cleaning . . . . . 22
Checking brake force . . . . . 23
Adjusting brake force . . . . . 23
Leg Friction Adjustment . . . . . 24
**Technical Specification** . . . . . 25
75 mm aktiv Tripod . . . . . 25
100 mm Tripod . . . . . 25

# Safety

**Important information on the safe installation and operation of the product. Read this information before operating the product. For your personal safety, read these instructions. Do not operate the product if you do not understand how to use it safely. Save these instructions for future reference.**

## Warning symbols used in these instructions

Safety cautions are used in these instructions. These safety instructions must be followed to avoid possible personal injury and possible damage to the product.

**WARNING!** Where there is a risk of personal injury or injury to others, comments appear supported by the warning triangle symbol.
Where there is a risk of damage to the product, associated equipment, process or surroundings, comments appear supported by the word '**CAUTION**'.

## Health and Safety

**WARNING! Risk of personal injury or injury to others.** All personnel must be fully trained and adhere to correct manual handling techniques and Health & Safety regulations. It is the responsibility of the local organisation to enforce safe working practices at all times.

## Mounting and Installation

**WARNING!** Do not exceed the maximum payload capacity.

**WARNING!** Tripod spike feet can be dangerous, take care when handling. Always place tripod on the ground before releasing quick release levers.

**WARNING! Risk of finger entrapment.** Avoid trapping fingers when operating the tripod.

**WARNING! Trip hazard.** Set the tripod footprint to suit the shooting environment.

**WARNING! Toppling hazard.** Do not leave unattended. Keep out of reach of children.

**WARNING!** When in use always fully lock the tripod quick release levers to prevent the tripod collapsing.

**WARNING!** When releasing the quick release levers, be prepared to support the weight of any attached payload. **The levers are only sufficiently locked when in the fully closed (down) position.**

**CAUTION!** Always hold the payload securely when making adjustments to the tripod height or footprint.

**CAUTION!** Do not place your foot or heavy weight onto the spreader.

**CAUTION!** Always remove the camera before transporting.

## About this guide

This user guide is an important part of the product and is aimed at the personnel who operate and maintain the tripod. It contains information about the tripod and its proper use and serves to safeguard users and their equipment.

## Intended use

This tripod has been designed for professional use in television studios and outside locations for supporting fluid heads and cameras. Any use above and beyond this purpose is deemed improper and will void the warranty.

## Warranty

The product is covered by a one year warranty.

The warranty will be invalidated if:

- The tripod is improperly installed or used in a manner contrary to this user guide.
- The tripod housing is opened by unauthorised personnel.

We reserve the right to make changes to the product based on technological advances.

## Extended warranty

Please register at www.sachtler.com for an extended warranty period.

# Operating Elements

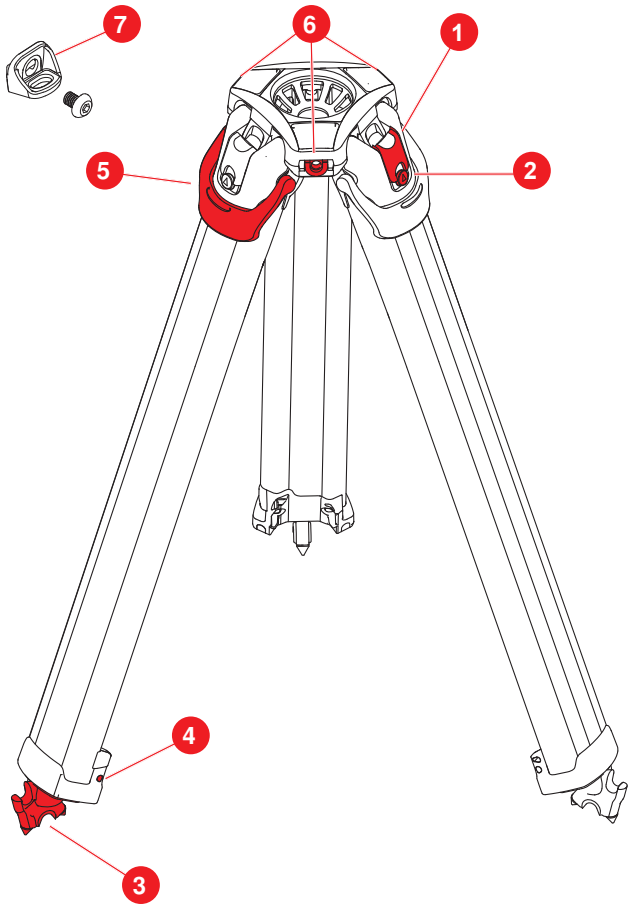


| Pos No. | Description |
|---|---|
| 1 | Hinge Lock Slider |
| 2 | Hinge Lock Button |
| 3 | Double-spiked Foot |
| 4 | Leg Magnetic Clasp |
| 5 | Quick Release Lever |
| 6 | Accessory Dock x 3 |
| 7 | Attachment Mount |

# Optional Accessories

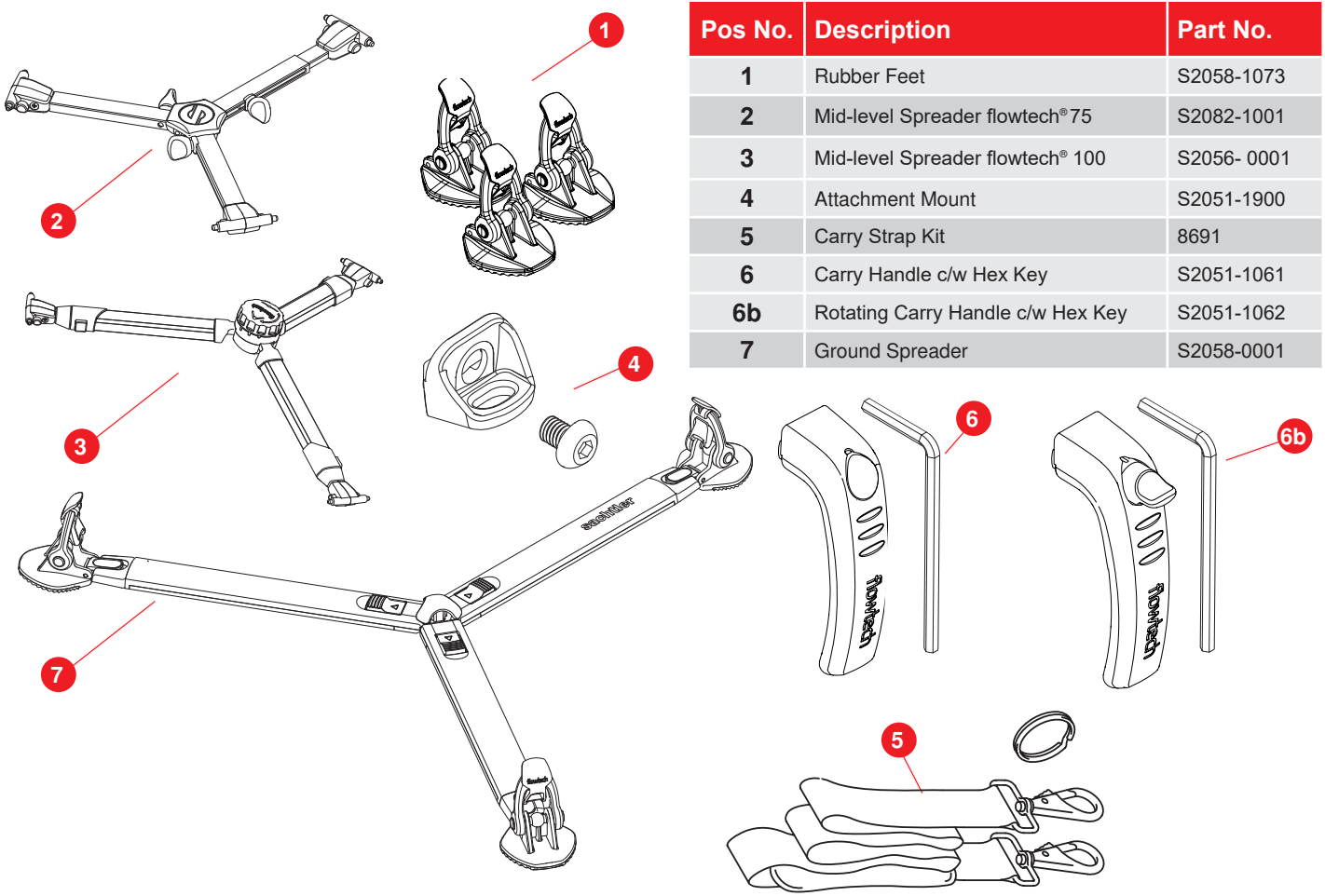


| Pos No. | Description | Part No. |
|---|---|---|
| 1 | Rubber Feet | S2058-1073 |
| 2 | Mid-level Spreader flowtech® 75 | S2082-1001 |
| 3 | Mid-level Spreader flowtech® 100 | S2056- 0001 |
| 4 | Attachment Mount | S2051-1900 |
| 5 | Carry Strap Kit | 8691 |
| 6 | Carry Handle c/w Hex Key | S2051-1061 |
| 6b | Rotating Carry Handle c/w Hex Key | S2051-1062 |
| 7 | Ground Spreader | S2058-0001 |

## Setting up the Tripod

1. The legs are secured using magnetic catches. Pull the legs from the bottom to separate.
   **Note!** If preferred this step may be performed after step 3.
2. Place the tripod on the ground. Lift the quick release levers fully and raise the tripod to the required height.

**WARNING!** Tripod spiked feet can be dangerous. Always place tripod on the ground before releasing quick release levers.

3. With the correct height achieved, lower the quick release levers to lock the legs in position.

**WARNING!** The legs are only sufficiently locked when the locking levers are in the fully closed (down) position.

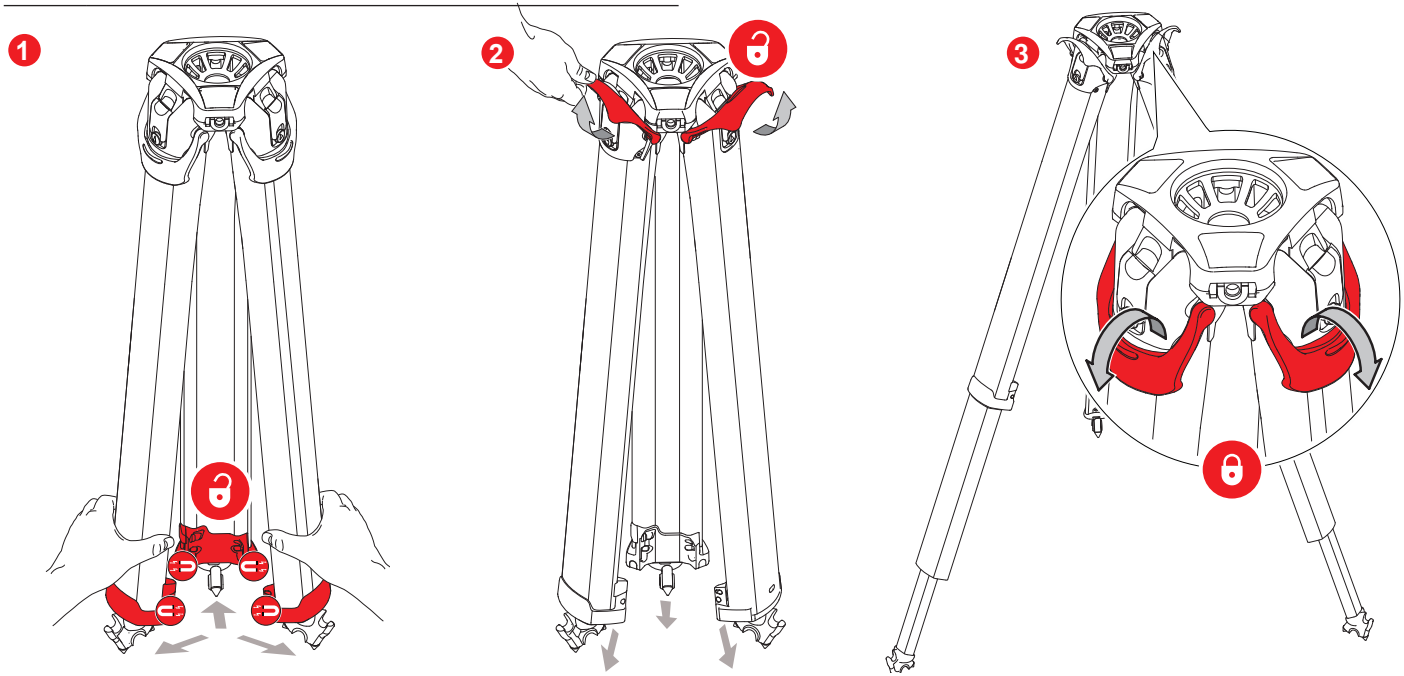

## Attach Optional Mid-Level Spreader flowtech® 75

**CAUTION!** Ensure the latching pins are fully engaged with the locating holes in the tripod. Failure to attach correctly could result in damage to the equipment

The tripod is delivered with the Hinge Lock in the OFF position for use with a spreader.
(See page 10 for lock operation).

1. Hold the spreader between thumb and forefinger and squeeze the release buttons on each side.

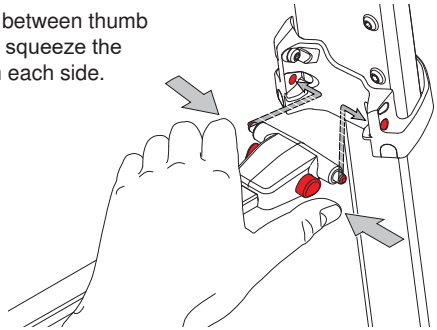

2. Align the latching pins with the locating holes on the tripod leg.
3. Release the buttons to lock the spreader in place.

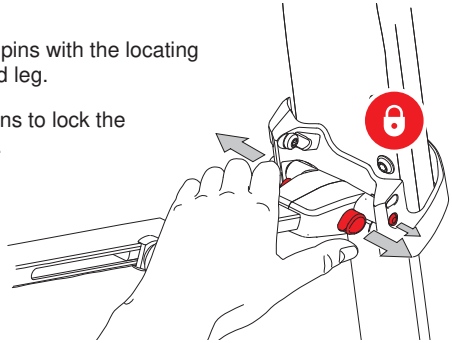

4. Unlock the spreader arms to allow the arms to extend as required.
5. Tighten the spreader locks when the tripod legs are in the correct position.

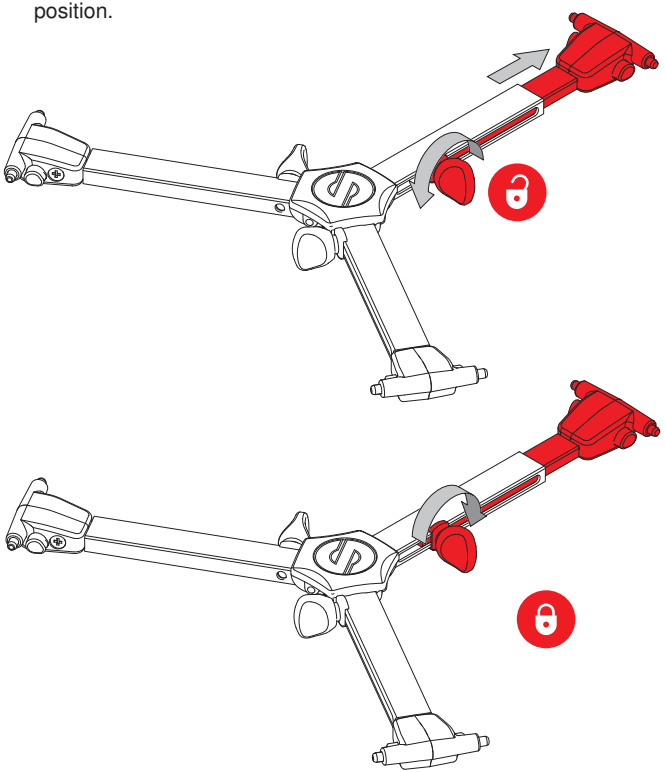

If the spreader will not lay flat when fitted, check the Hinge Lock is in the OFF (spreader mode) position for use with a spreader. (See page 10 for lock operation).

## Attach Optional Mid-Level Spreader flowtech® 100

**CAUTION!** Ensure the latching pins are fully engaged with the locating holes in the tripod. Failure to attach correctly could result in damage to the equipment

The tripod is delivered with the Hinge Lock in the OFF position for use with a spreader.
(See page 10 for lock operation).

1. Hold the spreader between thumb and forefinger and squeeze the release buttons on each side.

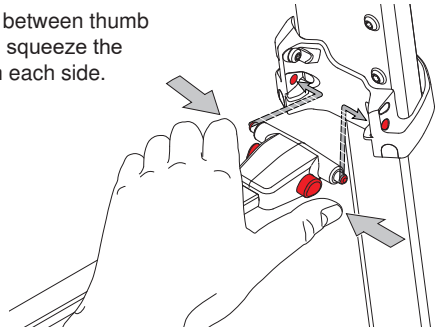

2. Align the latching pins with the locating holes on the tripod leg.
3. Release the buttons to lock the spreader in place.

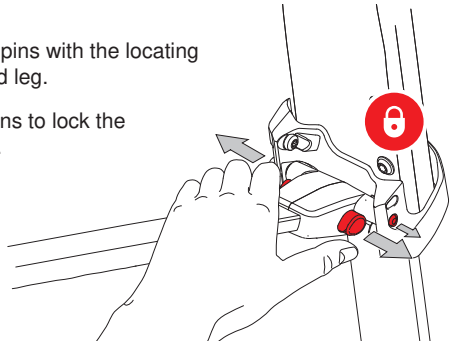

## Operation of Mid-Level Spreader flowtech® 100

1. Press and hold the arm release button (as below).
2. Extend the inner arm to the required length and release the button.

**Visual Distance Markers**

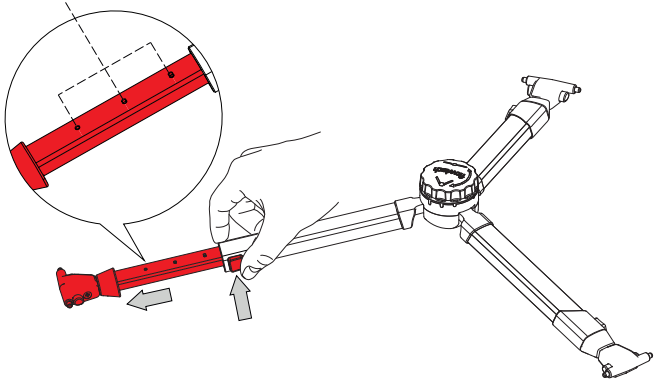

NOTE! The inner arm should not be pushed back against the ratchet mechanism, always hold the release button down whilst extending or retracting the inner arm.

The inner section has three distance markers (as shown above), this helps to visually set the length of the spreader arms.

If the spreader will not go into the selected position, check the Hinge Lock is in the OFF (spreader mode) position for use with a spreader. (See page 10 for lock operation).

The spreader has 4 x locking positions 50, 40, 30 and 0°

1. Rotate the adjustment cap on top of the spreader, anticlockwise to allow the spreader to open to the selected setting.
2. A positive click will be felt as each position is achieved.

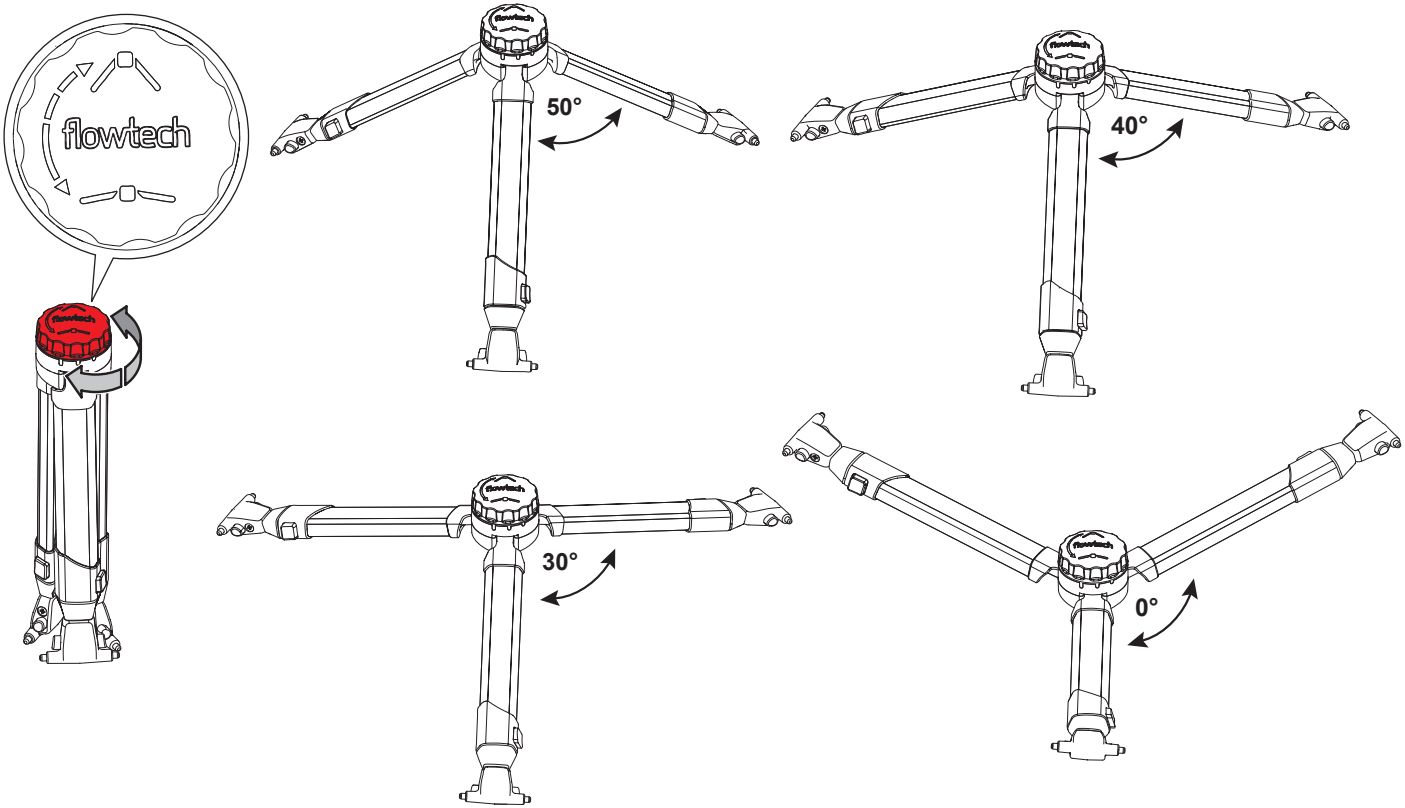

## Attach Optional Ground Spreader flowtech®

**CAUTION!** Ensure the ground spreader legs are all the same length before attempting to fold the tripod with the spreader attached. Failure to observe this procedure could lead to damage of the Ground Spreader

The tripod is delivered with the Hinge Lock in the OFF position for use with a spreader.
(See page 14 for lock operation).

Ground Spreader shown in the stored position

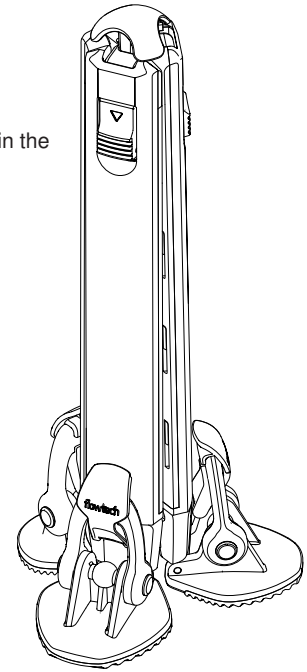


1. Place the spreader flat on the floor.

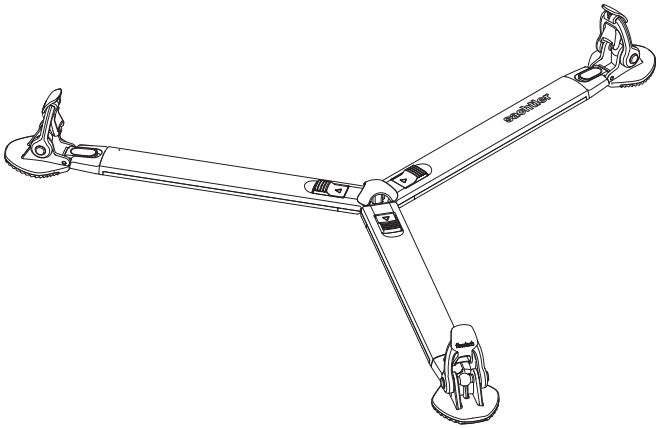


2. Place the tripod foot on the ball of the spreader foot.

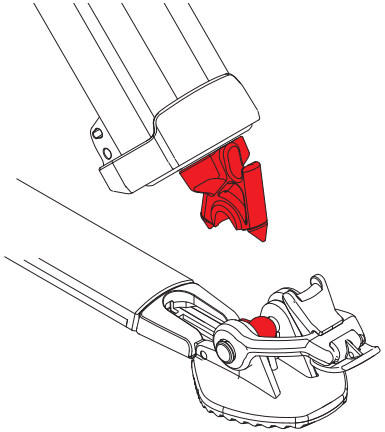

3. Bend the rubber strap 1 and engage the bottom edge of the lever in the tripod recess.

4. Lift the lever 2 upwards towards the tripod until it locks in place. Repeat for all three legs.

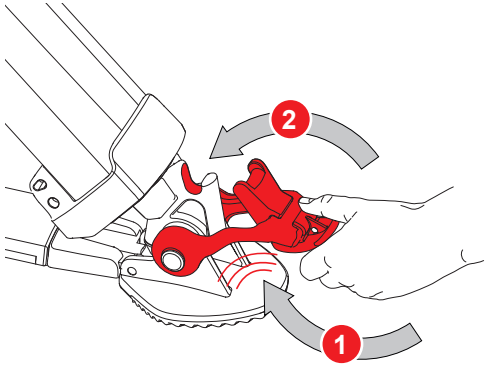


5. Tripod spiked foot secured in the Ground Spreader Foot.

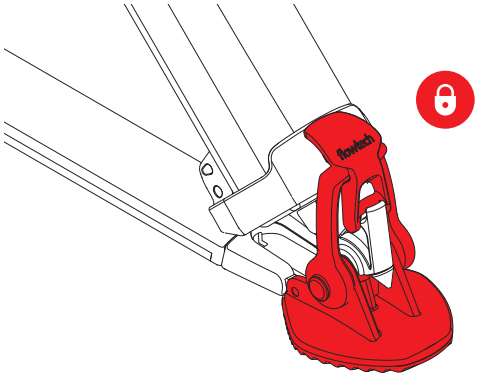


## Operation of Ground Spreader

1. When assembled on the tripod, use your foot to press and hold the arm release button (as below).

2. Extend the inner arm to the required length and release the button. (There are a total of 12 positions).

NOTE! The inner arm should not be forced back against the mechanism, always hold the release button down whilst extending or retracting the inner arm.

The inner section has distance markers (as shown below), this helps to visually set the length of the spreader arms.

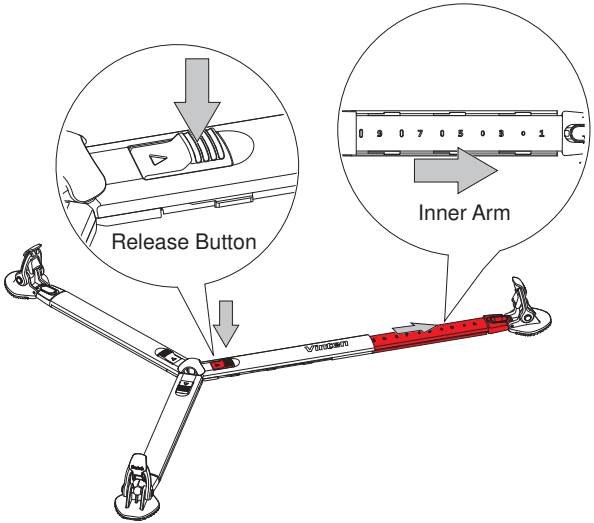


If the spreader will not go into the desired position, check the tripod Hinge Lock is in the OFF (spreader mode) position for use with a spreader. (See page 14 for lock operation).

### Closing Tripod with Ground Spreader Attached

1. To close the tripod legs, ensure all the spreader legs are set at the same distance.
2. Lift the spreader using the centre knob, then close the legs as normal.

**CAUTION!** Ensure the ground spreader legs are all the same length before attempting to fold the tripod with the spreader attached. Failure to observe this procedure could lead to damage of the Ground Spreader

The tripod can be closed with the spreader legs at minimum to maximum extension, as long as they are all set at the same length

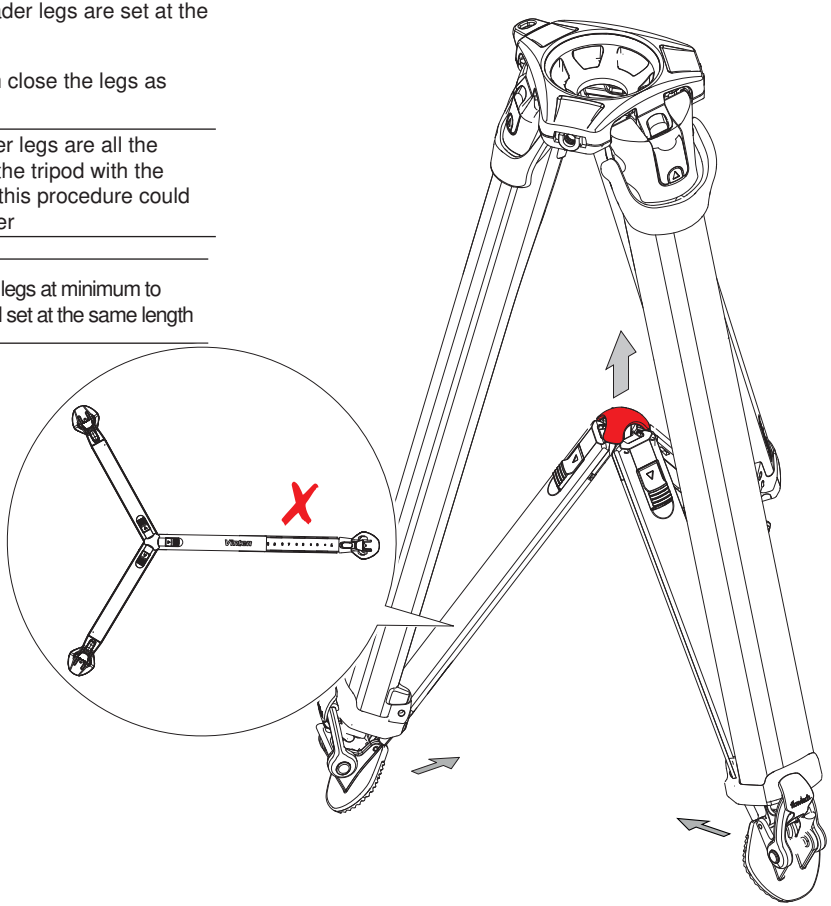

## Remove Foot from Spreader

1. To remove the feet from the spreader, push the foot release button towards the centre of the spreader.
2. Lift the foot from the spreader.
3. Reverse the procedure to re-attach the feet to the spreader

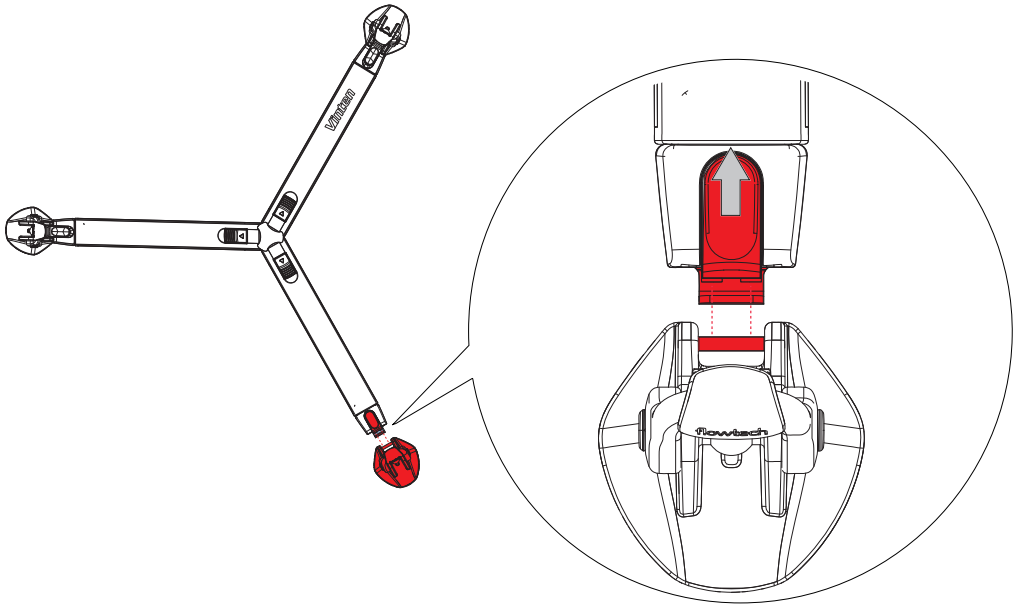


The spreader can be removed from the feet while they are still attached to the tripod

## Cleaning.

After each use, brush off any dirt or debris, if necessary wash down with clean water.

## Using Locks When no Spreader Used

The tripod can be used without a spreader using the three lock positions.

1. The tripod has 3 x lock positions 20°, 46° and 72°.

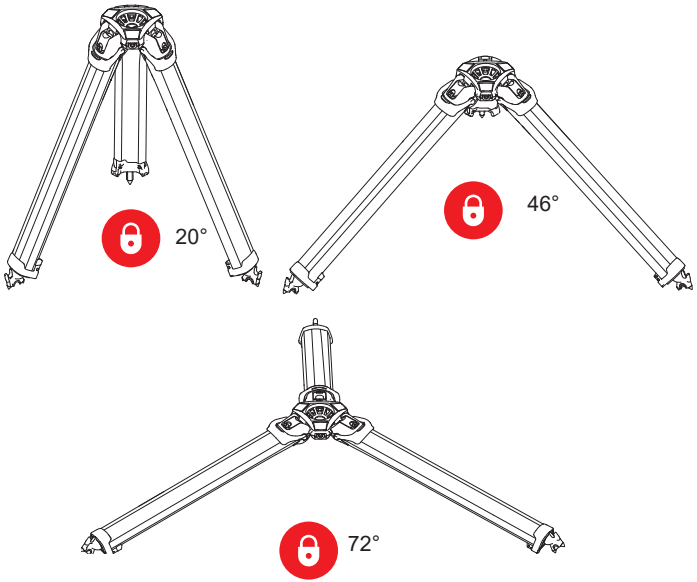


**Caution!** *Risk of damage.* Only use the 72° hinge lock setting with the legs in the fully retracted position. Do not apply excessive load. Do not place load on the leg profiles.

**Caution!** *Risk of damage.* In **No Spreader Mode** (Hinge Lock **ON**) position, ensure that the feet are free to adapt to a new footprint area when raising or lowering the tripod.

### No Spreader Mode

2. With the lock in the raised position the lock is **ON**.

Hinge Lock Slider in the engaged (**ON**) position.
(Leg will stop at pre-set positions)

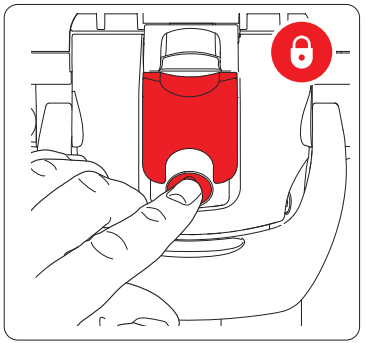

### Spreader Mode

3. With the lock in the lower position the lock is **OFF**.

Hinge Lock Slider in the neutral (**OFF**) position.
(Legs free to move through full movement)

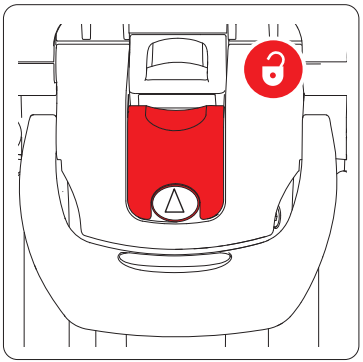

**Caution!** *Risk of damage.* When using with a spreader or dolly, ensure the Hinge Lock Slider is in the **OFF** position.

## Opening Tripod Legs

The first position at 20° is likely to be the most used position.

1. Press the lock button to engage the lock. (No Spreader Mode)
2. Pull the leg outward and it will stop at the 20° lock position.

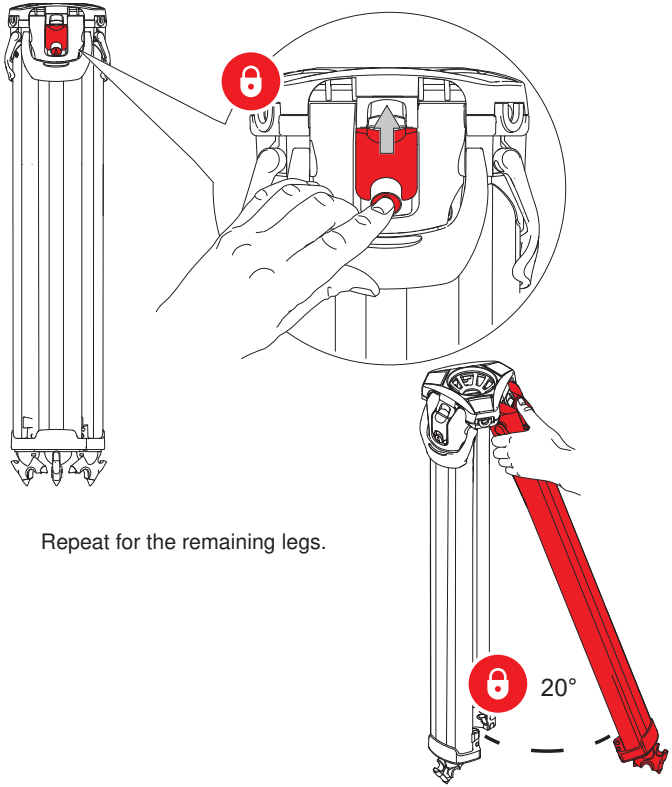


Repeat for the remaining legs.

The angle of each leg can be adjusted independently of the other two legs.

3. To select the 46° or 72° position, disengage the lock.
   a. As a safeguard against accidental collapse the leg must be moved inwards slightly ❶ to relieve the tension on the lock.
   b. Push the lock slider down ❷ and pull the leg outwards ❸.

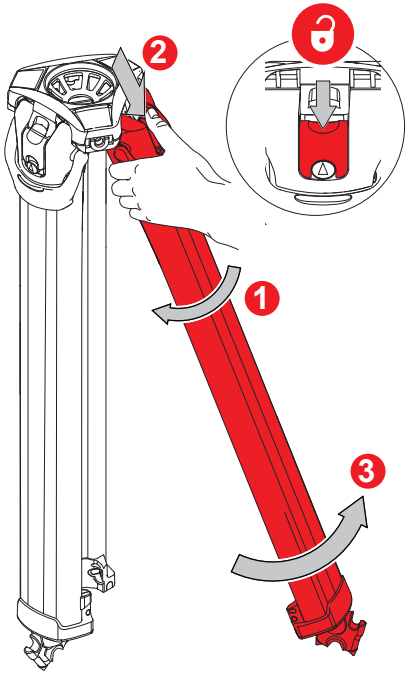

3. Move the leg past the 20° position.
4. Engage the Lock Slider by pushing the Hinge Lock Button.

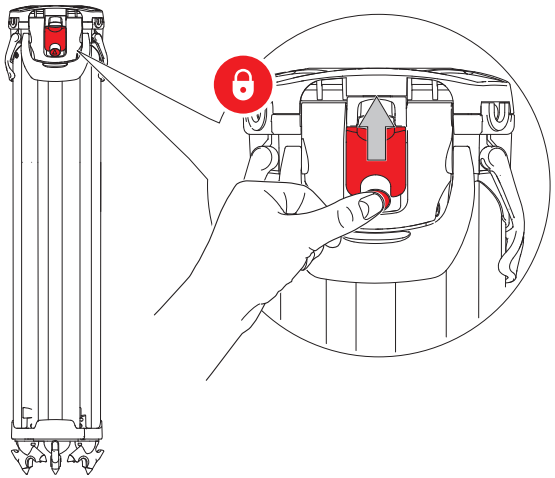

5. Continue pulling the leg until it stops at the 46° lock position.

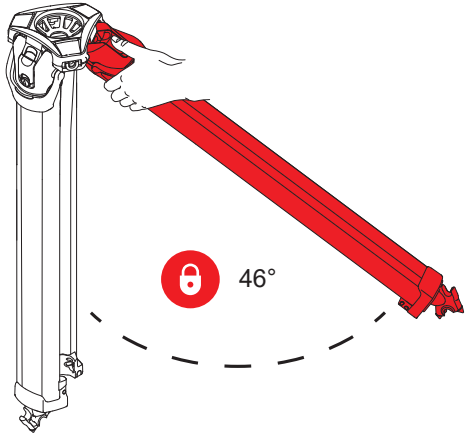


6. Repeat procedure for the 72° position.

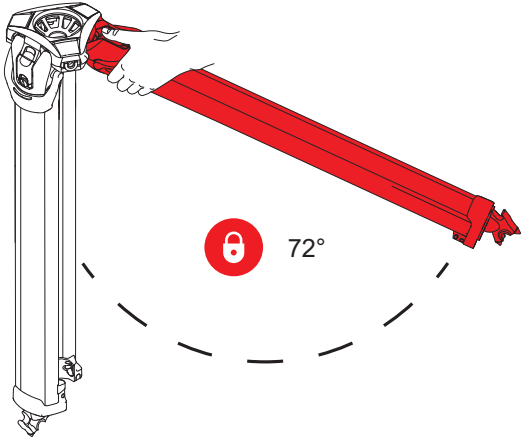


7. Repeat for the remaining legs as required.

### Alternative Locking Method

1. An alternative method would be to release the Hinge Lock, and fully open the leg to 90°

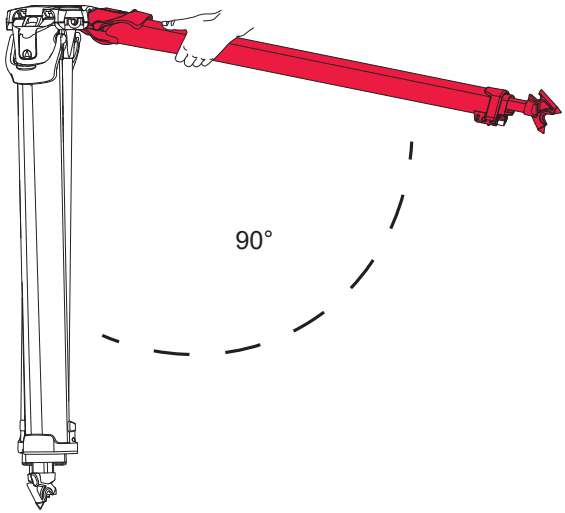


2. Engage the lock.

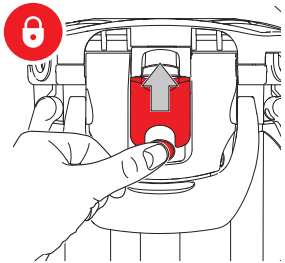

**WARNING! Risk of finger entrapment.** Avoid trapping fingers when operating the tripod.

3. Move the leg towards the body. As the leg passes each lock point, an audible click will be heard, the leg is prevented from opening past this point again without disengaging the lock first.

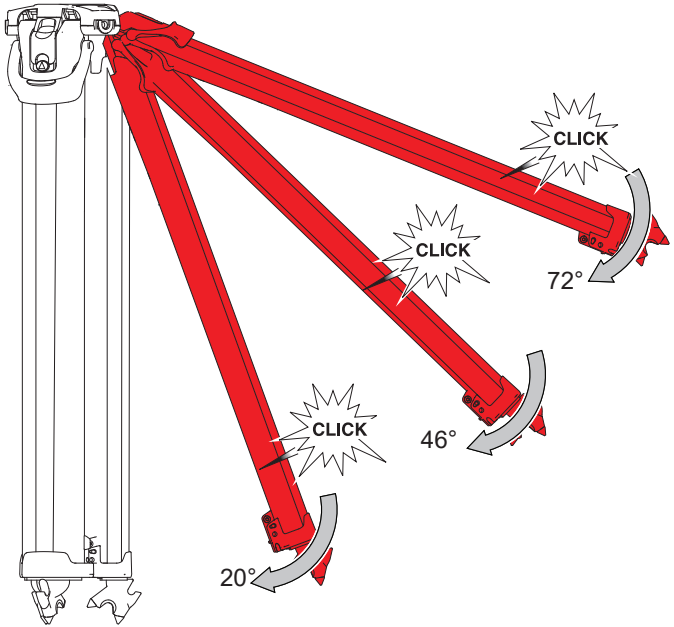

## Close Tripod Legs

1. The legs may be closed with or without the Lock being engaged.
2. Ensure the tripod legs are fully collapsed before moving them inward.

**WARNING! Risk of finger entrapment.** Avoid trapping fingers when closing the tripod.

The tripod is designed to accommodate the Mid-Level Spreader when collapsed.

3. Ensure the magnetic clasps have engaged and the legs are securely held.

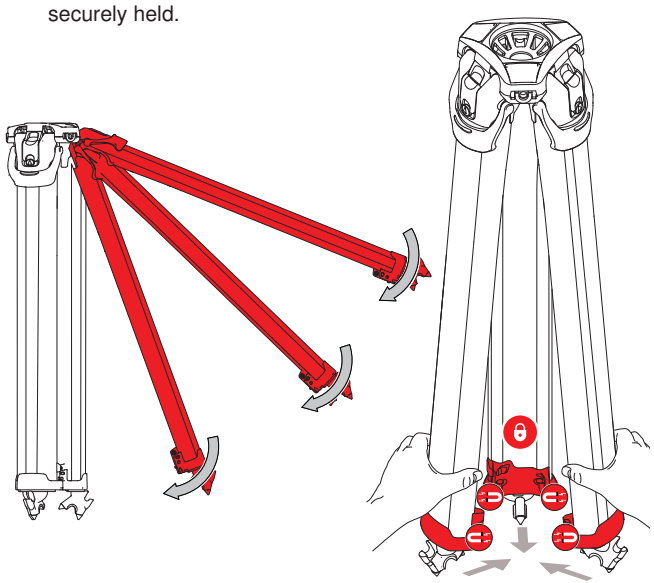



## Fit Supplied Attachment Mount

1. There are three accessory docks. These can be used to dock the supplied attachment mount, optional handle or a Magic Arm etc..
2. Offer the accessory to the docking point on the tripod head.
3. Insert the screw and tighten clockwise using a 5.5mm Hex key, tighten firmly.
4. Follow the same procedure to attach h optional accessories to the remaining mounting points if required.

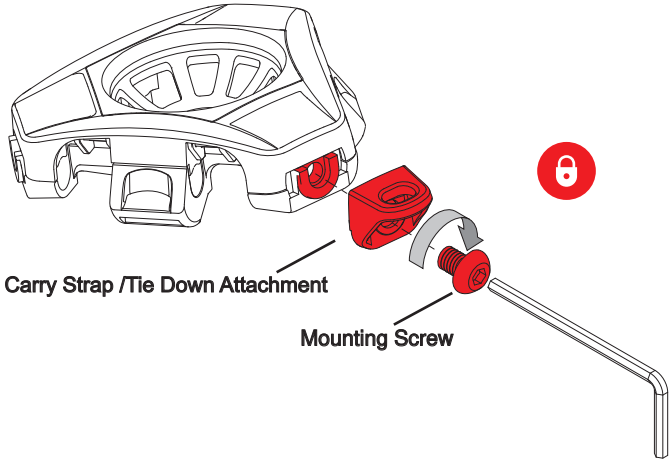

## Fit Optional Carry Strap

1. Fit the attachment mount as previous section: “**Fit Supplied Attachment Mount”.**
2. Fit the split ring to the mounting point at the bottom of the upper section.
3. Attach the strap clasps to the mounting points.

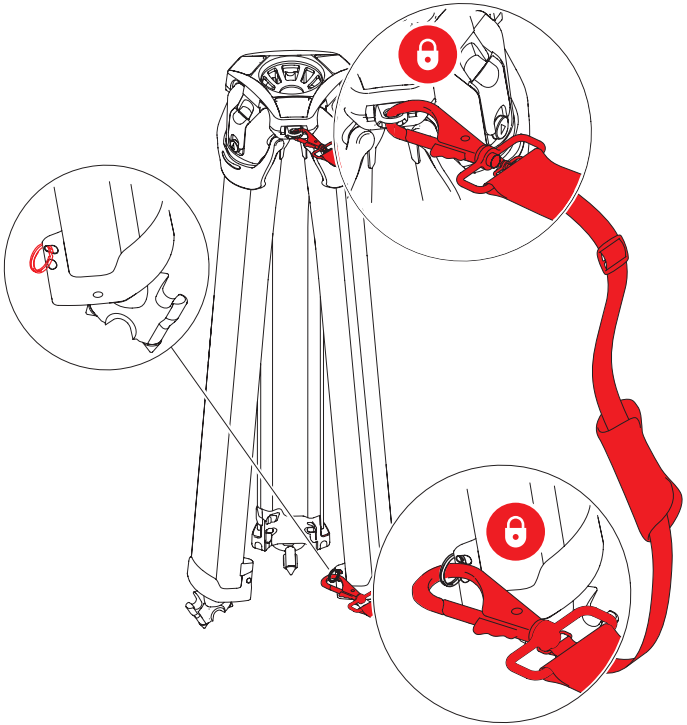

## Attach Optional Rubber Feet

1. Place the rubber foot between the spikes. Check the marking on the foot for the correct orientation. The ‘flowtech’ marking must face outwards.

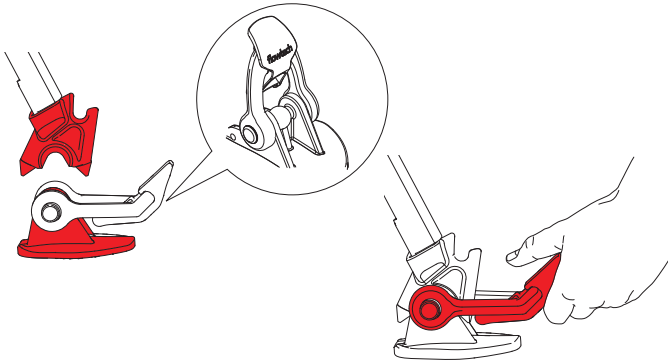

2. Bend the rubber strap 1 and engage the bottom edge of the lever in the tripod recess.
3. Lift the lever 2 upwards towards the tripod until it locks in place.

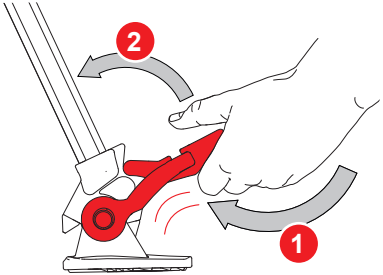


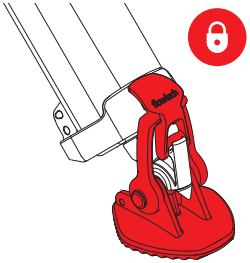

## Fit Optional Carry Handle (S2051-1061)

To attach the handle to one of the accessory docks.

1. Using a small screwdriver, lever the plug from the top of the handle to reveal the mounting screw.

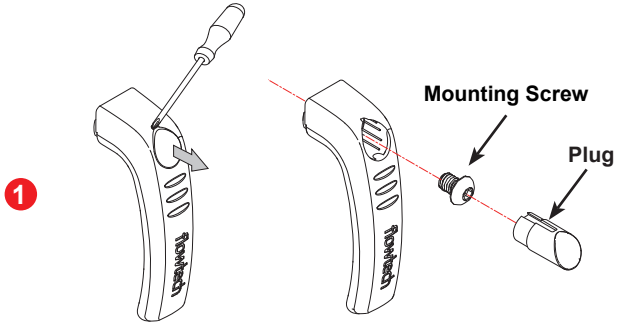


2. Using the supplied Hex key, align the mounting screw in the handle with the accessory dock and tighten clockwise, as shown below. Ensure the handle is secure. Insert the plug back into the handle, ensuring the groove is uppermost and it is firmly pushed home.

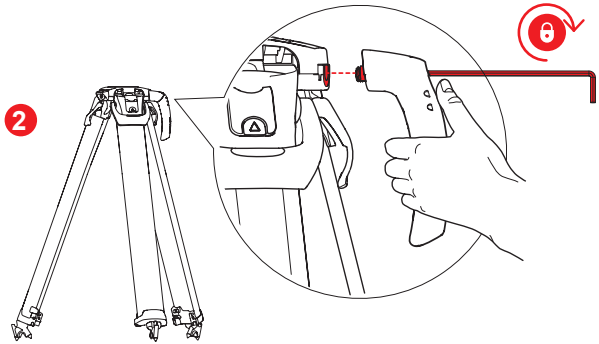


## Fit Optional Rotating Carry Handle (S2051-1062)

To attach the handle to one of the accessory docks.

### Fitting the Rotating Carry Handle

**CAUTION!** Take care to align threads properly whilst fitting to avoid causing damage to parts.

1. Unscrew the Lock Knob and remove from the handle.

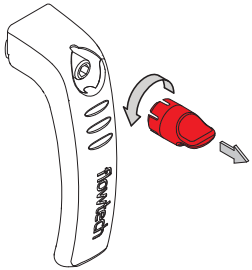

2. Use the supplied Hex key to screw the handle to the tripod mount. Firmly tighten.

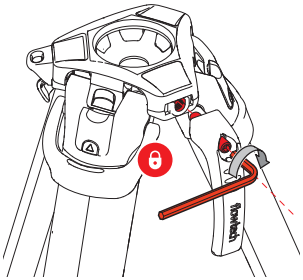

3. Screw the Lock Knob back onto the handle turning clockwise.

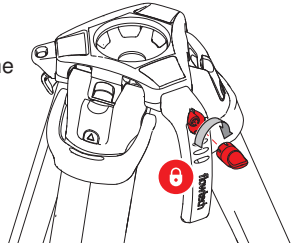

## Operating the Rotating Carry Handle

1. Loosen the Lock Knob, approximately three turns anti-clockwise.

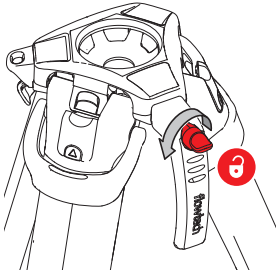

2. Pull the handle away from the tripod (a). Rotate the handle into the horizontal position (b) and release.
   The handle will remain in place under spring pressure.

   The tripod may now be used in the lowest position.

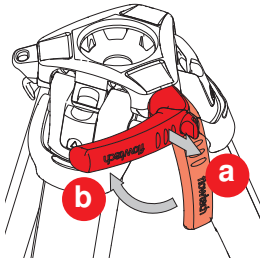


3. To place the handle back into the carry position: Rotate the handle back into the lock position and tighten the Lock Knob.

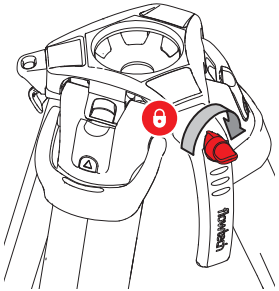



## Cleaning

**Video tutorials are available, if required please contact support@videndumgroup.com for further details.**

**CAUTION!** Do not use solvent or oil based cleaners, abrasives or wire brushes to remove accumulations of dirt as these will damage the protective surfaces. Use clean water only.

During normal use the only cleaning required is a periodic wipe-down with a lint-free cloth. Any dirt that accumulates during storage or periods of non-use may be removed with a vacuum cleaner. Particular attention should be paid to the ball base of the tripod.

Use out-of-doors under adverse conditions will require special attention. Salt spray should be washed off with fresh water at the earliest opportunity. Sand and dirt acts as an abrasive and should be removed using a semi-stiff brush or vacuum cleaner.

If exposed to extreme conditions, sand or grit could enter the tripod. This will require flushing to remove any contaminants.

### Flush the Tripod

1. Place the tripod in a bucket of clean, 30 cm deep water.
2. Release the quick release levers and extend tripod fully.
3. Keeping the feet in the water, collapse and extend the tripod repeatedly, forcing water through the leg sections until the leg moves freely with no sign of sticking or contamination.
4. If required turn the tripod upside down and repeat.
5. Wipe down the outer surface with a clean dry cloth.

## Hinge Lock Cleaning

The Hinge lock is designed so that sand or other debris may be worked out of the hinge lock mechanism.

Repeatedly operate the button and hinge slider, combined with blowing out the debris until the mechanism operates smoothly.

Should this procedure fail to sufficiently clear the debris, follow the instructions below to disassemble the mechanism for cleaning.

1. Pull the leg out to gain access to the M4 lock screw.
2. Using a 2.5mm or 3⁄32” ball ended hex key, remove the M4 lock screw by turning anticlockwise.

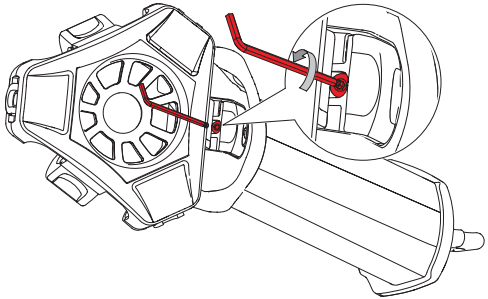

**Caution!** If the screw is dropped in the lock mechanism, do not try to close the leg. Turn the tripod upside down and shake the screw out or retrieve using pliers.

3. With the screw removed raise the leg to the horizontal position and push the hinge slider towards the bowl and lift out.

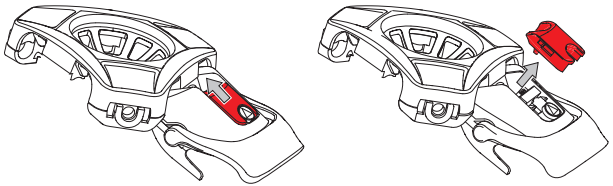

4. Lift out the hinge lock button.

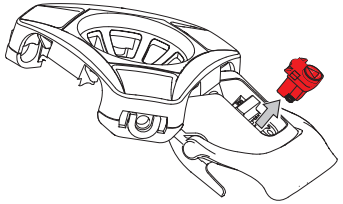

5. Use compressed air and a soft brush to remove any debris.

**WARNING!** When using compressed air, wear suitable safety glasses to avoid injury.

6. Work the hinge lock up and down using the flat edge of a screw driver pushing on the centre of the lock, debris will work its way out the bottom of the mechanism.

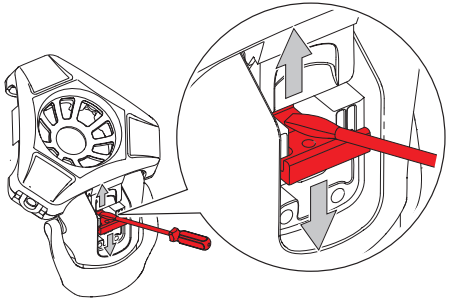

7. Once the lock is clean assembly is a reversal of steps 2 - 4.

**Caution!** When replacing the M4 lock screw, offer it to the thread and turn anticlockwise until you hear a click then tighten clockwise. This will prevent the screw from being cross threaded.

## Checking brake force

Periodically check the effectiveness of the leg brake force and adjust if necessary.

1. Extend the middle and lower sections to 20 cm each.
2. Place a rubber mat or similar on a set of scales to prevent damage and skidding. Stand one leg on a set of scales and apply a vertical downward force.

**WARNING!** Use a non-slip mat to ensure the foot does not slip from the scales when applying downward pressure.
**WARNING!** Finger entrapment. Take care not to trap fingers.

| | flowtech 75 | flowtech 100 |
|---|---|---|
| ✗ | < 20 kg (44 lb) | < 30 kg (66 lb) |
| ✓ | 20 - 30 kg (44 - 66 lb) | 30 - 40 kg (66 - 88 lb) |
| ✗ | > 30 kg (66 lb) | > 40 kg (66 lb) |

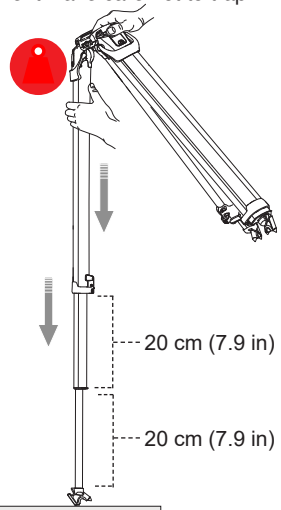


3. With an average downward force of 20 - 30 kg (44 - 66 lb) **flowtech 75** or 30 - 40 kg (66 - 88 lb) **flowtech 100** applied, the leg should remain extended.
4. If the leg starts to collapse before a 20 kg (44 lb) **flowtech 75** or 30 kg (66 lb) **flowtech 100** force is achieved then adjustment is required. **“See Adjusting brake force”**.

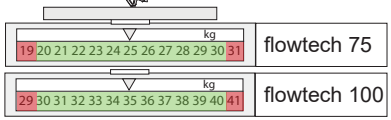

Average slip force

## Adjusting brake force

1. Lift the quick release lever to clear the adjustment screw. Using a 2.5mm or 3⁄32” hex key, turn clockwise to increase the brake force.
2. 10 full turns = 2 kg (4.4 lb) of additional brake force.

**CAUTION!** Do not adjust more than required as this will lead to increased wear and stress on the brake components.

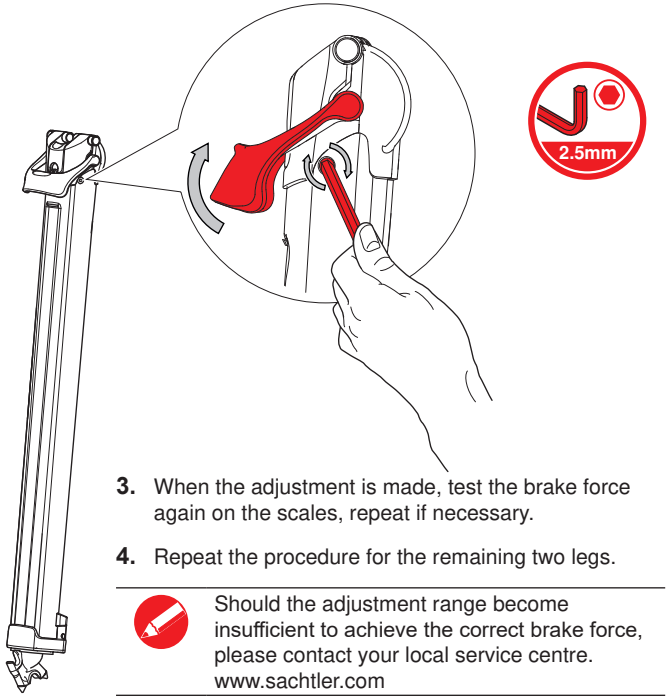


3. When the adjustment is made, test the brake force again on the scales, repeat if necessary.
4. Repeat the procedure for the remaining two legs.

Should the adjustment range become insufficient to achieve the correct brake force, please contact your local service centre. www.sachtler.com

# Maintenance

## Leg Friction Adjustment

1. Should the leg friction require adjustment, open the legs to gain access to the M5 friction screws on the underside of the tripod.
2. The correct torque for these M5 screws is 2.5Nm to 3.5Nm Max.

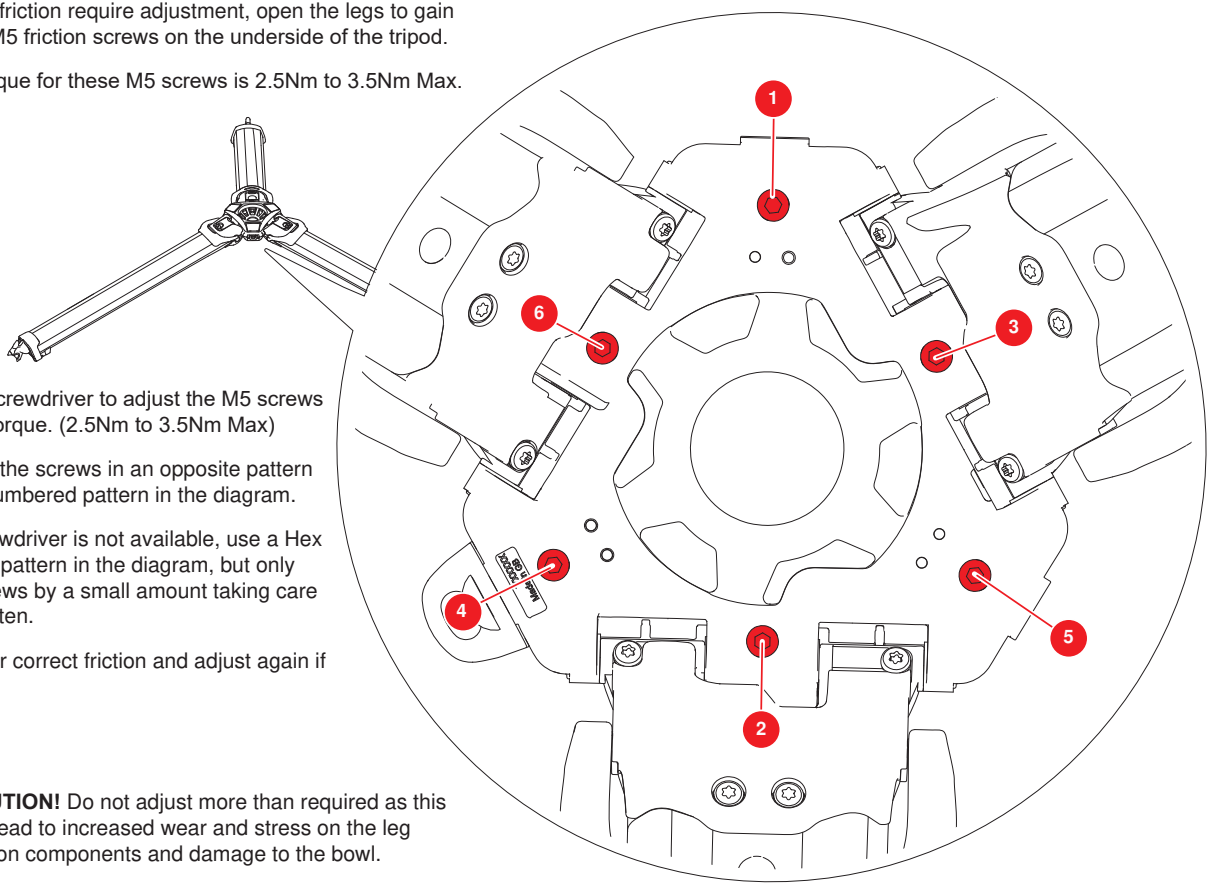


3. Use a torque screwdriver to adjust the M5 screws to the correct torque. (2.5Nm to 3.5Nm Max)
4. Always tighten the screws in an opposite pattern following the numbered pattern in the diagram.
5. If a torque screwdriver is not available, use a Hex Key; follow the pattern in the diagram, but only tighten the screws by a small amount taking care not to over-tighten.
6. Test the legs for correct friction and adjust again if necessary.

**CAUTION!** Do not adjust more than required as this will lead to increased wear and stress on the leg friction components and damage to the bowl.

| | 75 mm aktiv Tripod | 100 mm Tripod |
|---|---|---|
| **Bowl** | 75 mm | 100mm |
| **Maximum payload** | 20 kg (44 lb) | 30 kg (66 lb) |
| **Weight** Tripod Only | 2.9 kg (6.39 lbs) | 3.2 kg (7.01 lbs) |
| **Transport Length** | 68 cm (26.7 in.) Excluding rubber foot. | 68 cm (26.7 in.) Excluding rubber foot. |
| **Operational Temperature** | -40°C to 60°C (-40°F to 140°F) | -40°C to 60°C (-40°F to 140°F) |
| **Maximum Operational Height** (On Hinge Lock) | 153 cm (60.23 in.) | 153 cm (60.23 in.) |
| **Minimum Operational Height** (On Hinge Lock) | 26 cm (10.23 in.) | 26 cm (10.23 in.) |

| | 75 mm aktiv Tripod | 100 mm Tripod |
|---|---|---|
| **Maximum Operational Height** On Mid-Level Spreader | 157 cm (61.81 in.) | 155 cm (61.00 in.) |
| **Minimum Operational Height** On Mid-Level Spreader | 63 cm (24.8 in.) | 52 cm (20.5 in.) |
| **Maximum Operational Height** On Ground Spreader | 158 cm (62 in) | 159 cm (63 in) |
| **Minimum Operational Height** On Ground Spreader | 41 cm (16.4 in) | 43 cm (16.9 in) |
| When used without rubber feet the tripod height will decrease by up to 1.8 cm. | | |
| **Material** | Carbon Fibre | Carbon Fibre |
| **Extensions** | X2 | X2 |

Technical specifications are subject to change without notice.

Publication No. S2051-4983/7

sachtler®

Sachtler
A Videndum plc Brand

www.sachtler.com