September 2026

Installation and Operation Manual

Blackmagicdesign

Blackmagic URSA Cine



Blackmagic URSA Cine 12K

Blackmagic URSA Cine 17K 65



Welcome

Thank you for purchasing your Blackmagic URSA Cine!

After we released our first digital film camera in 2012 we have been privileged to have received some of the best guidance and feedback for a new product! We all grew up admiring the work of the world's leading cinematographers and it's been an honor to spend hours in conversation with these legendary experts on the features we need to add to our cameras. Of course, every individual we speak with has good ideas too!

We have taken all your feedback on board, combined that with everything we have learned along the way and now we introduce Blackmagic URSA Cine!

URSA Cine 12K LF features our second generation wide dynamic range 12K sensor and URSA Cine 17K 65 has our 2.2:1 65mm sensor that is 40% wider! Both models are packed with everything we've ever wanted to add for high end digital cinema acquisition! Your URSA Cine is compact and robust, with a light and sturdy metal chassis and ergonomic controls, Blackmagic Cloud sync, advanced streaming, 10G Ethernet, high speed WiFi, multiple USB ports for accessories, 12 and 24V power outputs and much more. With ultra fast storage using the included Blackmagic Media Module, you can shoot full frame open gate 8K at up to 144fps, 65mm open gate 8K at up to 100fps and even 8K 2.4:1 at up to 224 frames per second and never have to worry about media speed.

We have also added the powerful assist station so camera assistants, focus pullers, sound recordists and crew can use the camera for checking levels, monitoring exposure and the focus scale, plus other helpful tools for easy and fast production.

There are so many tiny improvements and features on URSA Cine, including the types of connectors and their positions, a dovetail compatible baseplate with both lightweight 15mm and 19mm studio rod spacing included and so much more. We are really excited by URSA Cine and hope you use your camera to produce some of the world's most dynamic and creative projects! We are keen to see what creative work you produce and to get your feedback on new features you would like to see us add to URSA Cine!



Grant Petty
CEO Blackmagic Design

Contents

Getting Started 6
Attaching a Lens 6
Attaching a PL Mount Lens 7
Measuring the Lens Mount Depth 8
Attaching an EF Mount Lens 9
Powering your Camera 10
Turning on your Camera 11
URSA Cine Overview 12
Camera Front 12
Camera Left 13
Camera Right 14
Rear Panel 15
Top Panel 17
Underside 18
Recording 19
Choosing the Resolution, Aspect Ratio and Codec 20
Proxy Recording 20
Choosing Frame Rates 20
Record Durations 24
Data Rate Tables 24
Dynamic Range 26
Playback 27
Media Pool 28
Controls 29
Playback 29
Group Select 31
Media Filter 31
Storage 32
Uploading Clips to Blackmagic Cloud 33
Logging into Blackmagic Cloud 33
Setting Cloud Locations 35
Blackmagic Cloud Projects Panel 37
Uploading Clips to a Blackmagic Cloud Project 37
Selectively Uploading Clips to Projects 39
Upload Original 40
Uploading to your Blackmagic Cloud Storage 40
Clip Upload Status Indicators 41
Closing the Media Pool 42
Blackmagic Media Module 42
Transferring Clips to Edit Storage 43
Unloading Blackmagic Media Module 44
Loading Blackmagic Media Module 45
Preparing Media for Recording 46
Blackmagic Media Dock 48
Connecting Power 48
Connecting to your Network 48
Loading and Unloading Blackmagic Media Modules 49
Status LEDs 49
Blackmagic RAW 51
Recording to Blackmagic RAW 52
Blackmagic URSA Cine EVF 55
Assembling and Attaching the EVF 55
Assembling the URSA Cine EVF Mounting Mechanism 55
Attaching the Eyepiece to URSA Cine EVF Rotating Bracket 57
Connecting URSA Cine EVF to your Camera 57
Positioning URSA Cine EVF 58
Adjusting Forwards and Backwards 58
Adjusting the Height 58
Adjusting the Eyepiece 59
Adjusting the Eye Cup and Glass Diopter 59
EVF Buttons and Features 59
Attaching URSA Cine EVF Extension 61
Attaching an Eyepiece Leveller 64
Control Buttons 68
Forward Control Panel 68
Ergonomic Control Panel 71
Status LCD 72
Status LCD Controls 74
Control and Playback Buttons 75
Internal Control Panel 76
Assist Station 78
Using the 1st AC Page 81
Touchscreen Controls 83

LCD Monitor Options 83
ND Filter indicator 91
LUT Indicator 92
Frames Per Second 92
Shutter 94
Iris 96
Duration Display 97
ISO 98
White Balance 99
Power 100
Histogram 101
Record Button 102
Storage Indicators 102
Talkback Controls 104
Audio Meter 104
Focus Zoom 105
Full Screen Mode 106
Playback Menu 107
Looping Playback 108
Settings 109
Record Settings 109
Monitor Settings 119
Audio Settings 127
Setup Settings 131
Presets 161
LUTS 164
Entering Metadata 168
Gyro Stabilization 175
URSA Cine 12K for Live Production 177
Connecting to an ATEM 4 M/E Constellation IP Switcher 178
Connecting to an ATEM Television Studio 4K8 Switcher 181
Camera Video Outputs 182
12G-SDI Outputs 182
URSA Cine Baseplates 183
Attaching the Baseplate 184
Adjusting the Baseplate 184
Attaching the Camera to the Dovetail Plate 185
Interchangeable Lens Mount 186
Removing the PL Mount 187
Blackmagic URSA Cine Mount LPL 187
Blackmagic URSA Cine Mount EF 188
Attaching an EF Lens 190
Blackmagic URSA Cine Mount B4 Kit 191
Attaching the B4 Mount 192
Attaching a B4 Mount Lens 193
Using Servo Zoom Lenses 195
Setting the Back Focus on B4 Lenses 199
Shimming Lens Mounts 203
Blackmagic Camera Setup 204
Setup Settings 206
Transferring Files over a Network 212
SMPTE-2110 Settings 215
Receivers 215
Senders 217
Accessories 220
Blackmagic URSA Cine Studio Viewfinder 220
Mounting and Connecting to Blackmagic URSA Cine 220
Adjusting the Blackmagic URSA Studio Viewfinder 222
Button Features 225
Updating the Internal Software 227
Blackmagic Zoom and Focus Demands 228
Attaching to Tripod Handles 228
Connecting to Your Camera 229
Using Blackmagic Focus Demand 230
Using Blackmagic Zoom Demand 231
Pinout Tables for URSA Cine Connectors 232
Using DaVinci Resolve 234
Project Manager 235
Editing with the Cut Page 235
Adding Clips to the Timeline 238
Video Only and Audio Only Edits 241
Trimming Clips on the Timeline 241
Toolbar 242
Adding Titles 243
Working with Blackmagic RAW Files 244
Color Correcting your Clips with the Color Page 247
Adding a Power Window 251
Using Plugins 253
Mixing Your Audio 254

Adding VFX and Compositing on the Fusion Page 259
Mastering Your Edit 268
Quick Export 268
The Deliver Page 269
Developer Information 270
Camera Control REST API 270
Panel Control API 272
Livestream Control API 273
LUT Control API 279
Clips Control API 283
Monitoring Control API 284
Event Control API 296
System Control API 297
Transport Control API 304
Timeline Control API 312
Media Control API 316
Cloud Control API 319
Slate Control API 323
Preset Control API 333
Audio Control API 335
Lens Control API 342
Video Control API 350
Camera Control API 358
Immersive Control API 362
Color Correction Control API 363
Notification websocket - 1.2.0 368
messages 368
Device Properties 370
Blackmagic Bluetooth Camera Control 385
Blackmagic SDI Camera Control Protocol 387
Example Protocol Packets 396
Blackmagic Tally Control Protocol 397
Help 399
Regulatory Notices 400
Safety Information 402
Warranty 403

Getting Started

Getting started with your Blackmagic URSA Cine is as simple as mounting a lens and powering your camera.

Attaching a Lens

The first step in getting started is to remove the protective dust cap from the lens mount.

Removing the PL Lens Mount Dust Cap

Hold the cap and rotate the PL locking ring counterclockwise to release it, then gently remove the cap from the mount.

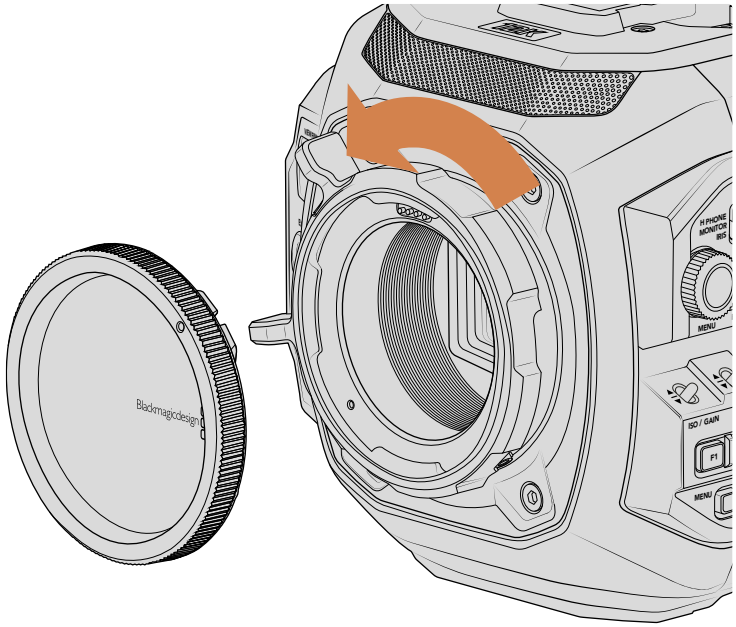

Rotate the locking ring to release the dust cap from the PL mount

NOTE Blackmagic URSA Cine features an interchangeable lens mount capable of accepting EF, PL and LPL mount lenses. For more information on switching between mount types on URSA Cine, refer to the ‘interchangeable lens mount’ section in this manual.

Attaching a PL Mount Lens

PL lenses are easily mounted to your camera by placing the lens against the camera's mount and securing it using the mount's locking ring.

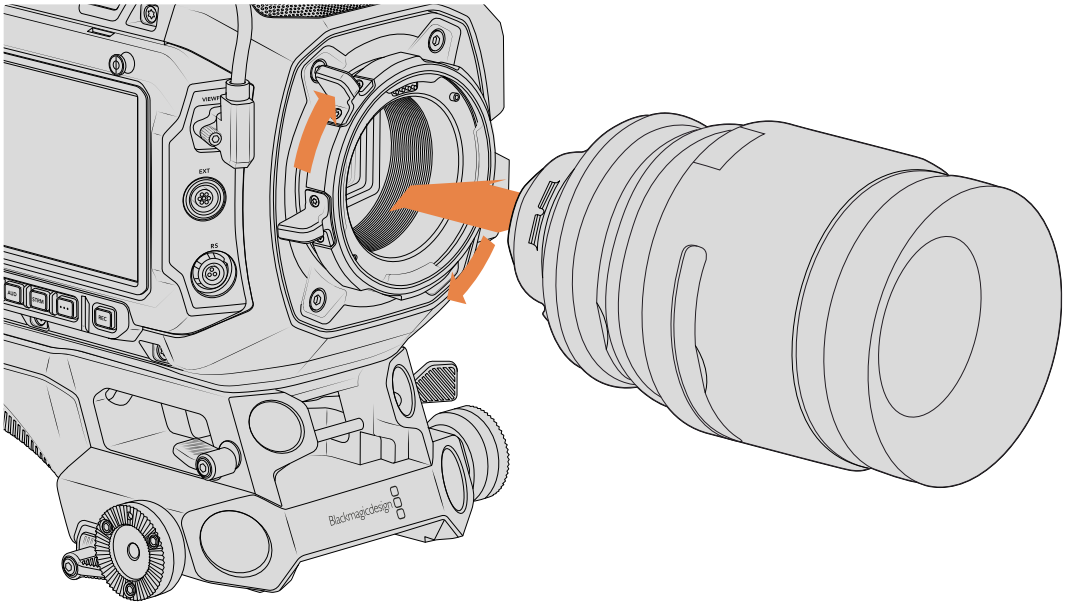

Attaching and removing a PL lens

1. Open your camera's PL locking ring by rotating it counterclockwise until it stops.
2. Align one of the lens' four flange notches with the locating pin on the camera mount. Be sure to align the lens for easy viewing of the lens marks.
3. Tighten the PL locking ring by rotating it clockwise.
4. To remove the lens, rotate the locking ring counterclockwise until it stops, then gently remove the lens by pulling it directly out from the camera body. There is no need to rotate the lens.

NOTE If attaching focus motors, you can power them from URSA Cine's EXT port or the RS port. These ports output 24V power for common lens motors and allows the lens motors to send record run and stop trigger signals to the camera from their respective hand units.

Cooke /i Technology Interface

URSA Cine's PL mount features four pins at the 12 o'clock position that are used to communicate with lenses featuring Cooke's /i Technology interface. The lenses that support this interface include lenses from Angenieux, Arri, Canon, Cooke, Fujinon, Leitz, Sigma and Zeiss. This lets you record lens information in your clips' metadata such as the lens model, focal length, aperture setting, focus distance and other lens specific information. In addition to recording lens information viewable in the 'lens data' metadata slate, this connection is also important for your camera's first AC page that displays live focus and iris scales. These scales are helpful indicators you can place markers on to help with critical focus and exposure. For more information, refer to the 'using the 1st AC page' section of this manual.

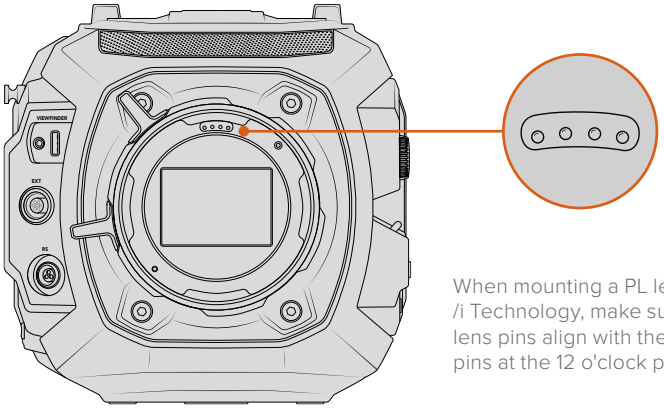

When mounting a PL lens with /i Technology, make sure the lens pins align with the mount pins at the 12 o'clock position

The information that is recorded as metadata via Cooke's /i Technology interface can be very helpful in post production and visual effects. Knowing the lenses used in production and their precise settings can be helpful in the event that the setup needs to be replicated at a later date.

This detailed information can also be utilized by powerful applications such as DaVinci Resolve and Blackmagic Fusion for a wide variety of advanced functions. For example, the recorded metadata can be used to simulate the specific lens in 3D space, or to correct lens distortions.

Measuring the Lens Mount Depth

Some PL and LPL lenses and adapters can protrude quite a long way into the camera's lens mount cavity. When mounting PL and LPL lenses or adapters to your URSA Cine, make sure the protruding rear lens element from the lens's rear mount does not exceed your camera's maximum depth.

Lenses that have a rear assembly exceeding your camera's maximum safe depth can contact the camera's internal filters causing damage.

PL Lens Maximum Safe Depth

Avoid mounting PL lenses with a rear element protrusion deeper than 31.98mm on a correctly shimmed URSA Cine.

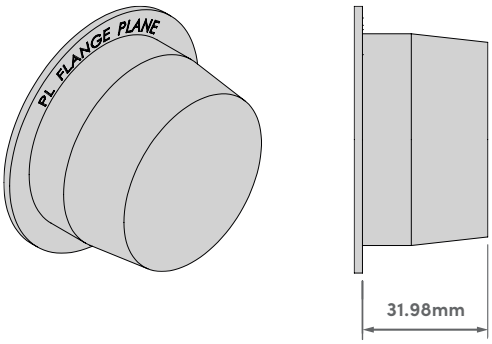

LPL Lens Maximum Safe Depth

Avoid mounting LPL lenses with a rear element protrusion deeper than 24mm on a correctly shimmed URSA Cine.

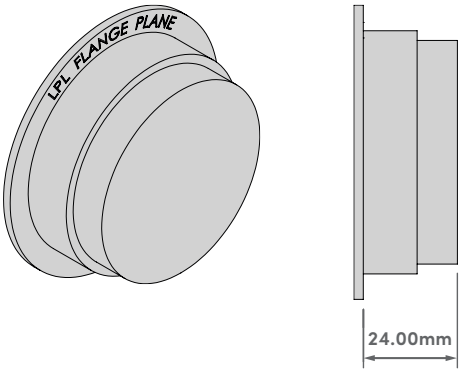

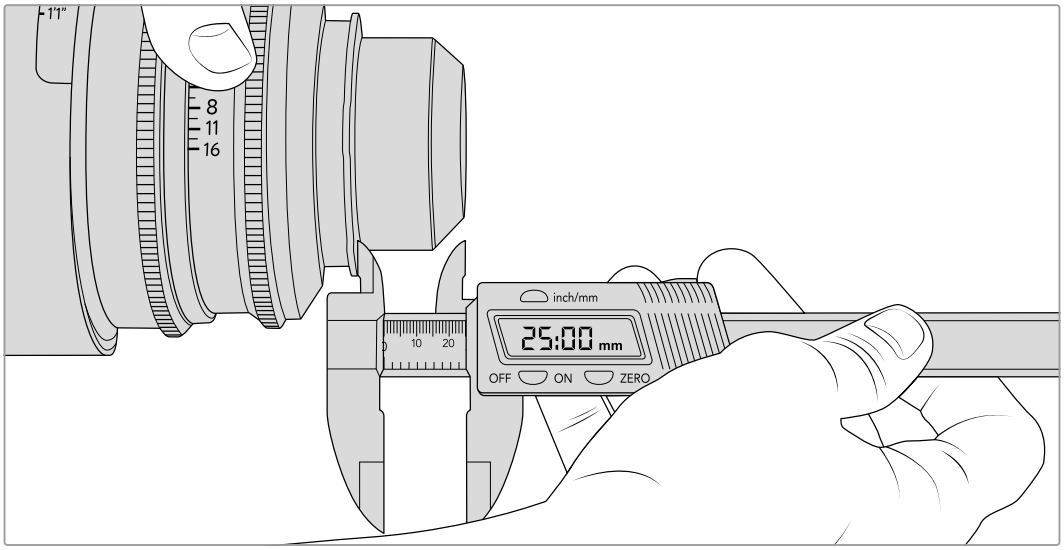

The illustration above shows how to measure the depth from the PL lens mount flange plane to the rear most point of the lens

Attaching an EF Mount Lens

For URSA Cine 12K LF body only models, an EF lens mount is attached. Before attaching an EF mount lens you will first need to remove the dust cap.

Removing the EF Mount Dust Cap

The EF mount dust cap is released by unlocking the mount, pressing the lens release button and turning the dust cap counter clockwise.

1. Rotate the locking ring counter clockwise until it stops.
2. Press the lens release button and rotate the dust cap counter clockwise until the red dot on the cover reaches the 12 o'clock position. This releases the cap and you can now remove it from the mount.

Attaching the Lens

The EF lens is easily attached by placing the lens mount against the camera mount and rotating the lens until it clicks into place. The lens can then be secured to the mount using the EF mount's locking ring.

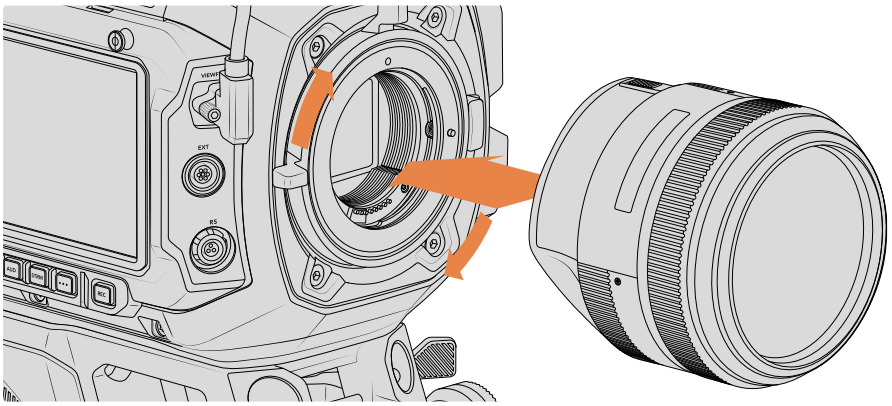

Attaching and removing an EF mount lens

1 To attach the EF lens, align the dot on your lens mount with the dot on the camera mount. Many lenses have a visual indicator, for example a blue, red or white dot.

2 Insert the lens into the mount and rotate clockwise until it locks into place.

3 Tighten the EF mount locking ring by rotating clockwise until it feels secure. Avoid over tightening. This action clamps the lens into place and prevents movement.

4 To remove the lens, unlock the locking ring, hold down the locking button and rotate the lens counterclockwise until its dot or indicator reaches the 12 o'clock position. Gently remove the lens from the mount.

Powering your Camera

Now that you have attached a lens you will need to supply power. The quickest way to power your camera is to connect external power using the supplied power adapter.

To plug in external power:

1 First remove the rubber protective dust cap and store it somewhere safe. Connect the AC to 24V DC adapter plug to your mains power socket using a standard IEC C13 mains power cable.

2 Align the red dot on the adapter's 8 pin connector to the 24V DC power connector on the camera's rear panel and gently push the connector in until you feel it lock into place. To remove, hold the connector's metal sleeve and gently pull away from the camera. This will pull the sleeve back, releasing the connector from the camera.

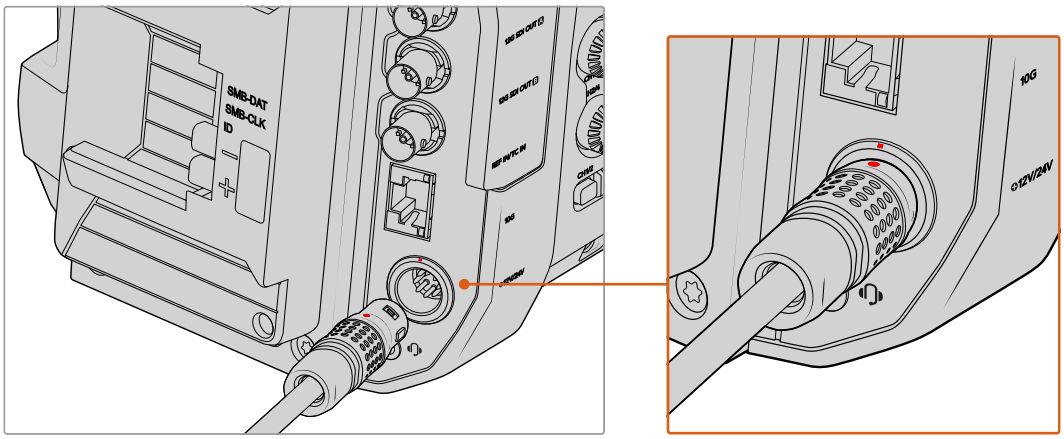

If you have both external and battery power connected, the camera will draw from the external power source. Removing external power while a charged battery is connected will switch your camera to battery power without interruption.

The battery plate included in URSA Cine kits is a B mount plate designed for 24 volt B mount batteries. Operating in the 24 to 34 voltage range is ideal for use with URSA Cine as the higher voltage reduces thermal losses allowing for high frame rate recording and powering multiple accessories from your camera.

NOTE Running URSA Cine cameras at 24V is recommended. If running URSA Cine with 12 to 18 volt power supplies or batteries, frame rates above 60 frames per second will not be available and powering accessories via the RS and EXT outputs is not possible.

Turning on your Camera

To turn on your URSA Cine:

1. Move the switch at the top of your camera to the ‘on’ position. The LED to the right of the switch will illuminate when on.
2. To turn the camera off, move the switch to the ‘off’ position.

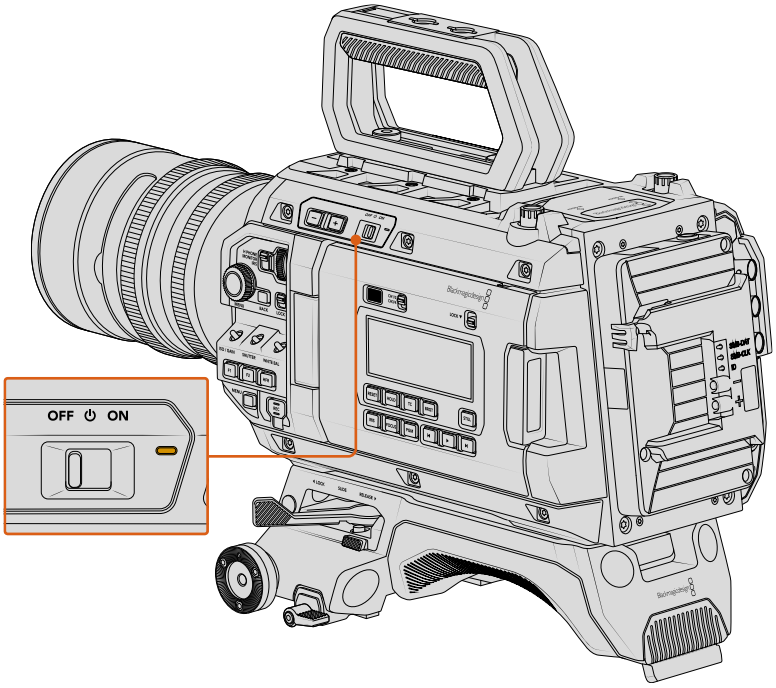

URSA Cine also features a redundant power switch that allows the camera to be turned on and off by briefly holding down the ‘rec’ and ‘forward skip’ buttons on the inside control panel behind the fold out touchscreen. While you wouldn’t normally power your camera using this method, it will allow you to turn the camera on and off while the switch is in the off position which is useful if the switch is obscured.

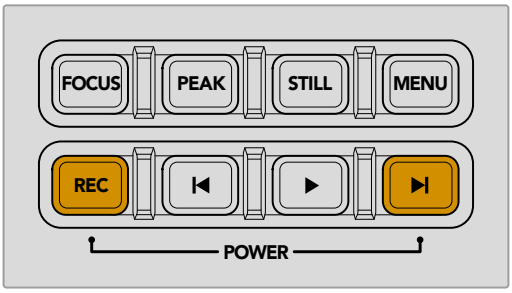

That’s all there is to getting started with your URSA Cine! With the media module already formatted in your camera, you can start recording straight away. Please keep reading this manual for information on how to record clips, play them back and use all the features on your URSA Cine!

URSA Cine Overview

This section of the manual describes all the features on your URSA Cine.

Camera Front

URSA Cine's front panel features a stereo microphone, interchangeable lens mount, lockable viewfinder USB port, plus 7 pin and 3 pin connectors for plugging in lens motors and accessories.

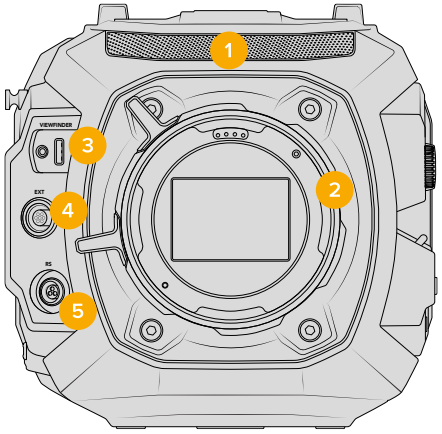

URSA Cine 12K LF

1 Stereo Microphone

Built in high quality stereo microphone. Refer to the 'audio settings' section for information on microphone audio settings.

2 Lens Mount

URSA Cine features an interchangeable lens mount and is shipped with the PL or EF mount already attached. The interchangeable mount allows switching between PL, locking EF, LPL and B4 mounts. Refer to the 'interchangeable lens mount' section for more information.

3 Viewfinder USB-C

This USB-C port provides power and video for Blackmagic URSA Cine EVF and URSA Cine Studio Viewfinder. Control signals are also carried so viewfinder function buttons can control features such as starting or stopping recording. You can also connect Blackmagic PYXIS Monitor for live monitoring plus touchscreen functionality with HUD and menu controls. Some display port monitors with USB-C can also be used.

4 EXT Connector

This 7 pin connector provides power, simple record run stop and serial control communication for working with focus motors, motor drive units and other systems.

5 RS Connector

This 3 pin Fischer connector provides power and allows simple record run stop trigger from focus motor systems, Blackmagic URSA Cine Grips and other standard record trigger buttons.

NOTE When running from 24V+ power supplies or batteries, the EXT and RS connectors provide 24 volt power output at up to 2 amps shared between them.

Camera Left

URSA Cine's left side panel lets you access the control panels and features ergonomic controls for easy access to all of your camera's essential functions. These controls are shared between the forward control panel, the ergonomic control panel located on the outside of the foldout touchscreen monitor, plus an internal control panel on the left side of the camera when the foldout monitor is open.

The Blackmagic Media Module bay is accessible with the foldout monitor open.

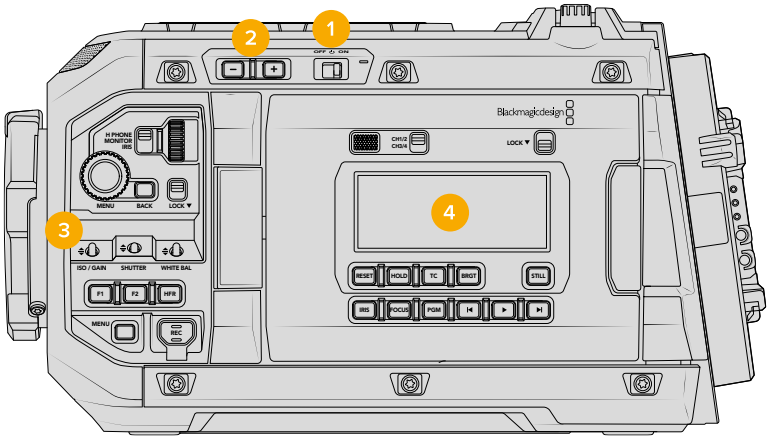

URSA Cine with the foldout touchscreen closed

1 Power Switch

Power switch for turning on the camera on and off.

2 ND Filters

URSA Cine 12K LF has three internal neutral density filters to adjust the amount of light reaching the sensor. Four settings are available, ranging from clear to six stops of light reduction. Simply press the '+' and '-' buttons to move through the available settings. The filters are electronically controlled and will click into place for each setting. For more information see the section 'control buttons' in this manual.

On URSA Cine 17K 65, these buttons are used as assignable function buttons.

3 Forward Control Panel

The forward control panel provides quick access to all of your URSA Cine's essential functions. These controls are located for easy access when shooting on a tripod or on the shoulder and you can use them to adjust settings such as ISO, shutter angle or shutter speed, iris, white balance, frame rate, and more. See the section 'control buttons' for more information.

4 Ergonomic Control Panel

On the outside of the foldout touchscreen monitor, you'll find an LCD status monitor and a variety of controls for fast, powerful monitoring control. Here you can see all of your camera's status information at a glance, as well as controlling a variety of powerful monitoring functions. See the section 'control buttons' for more information.

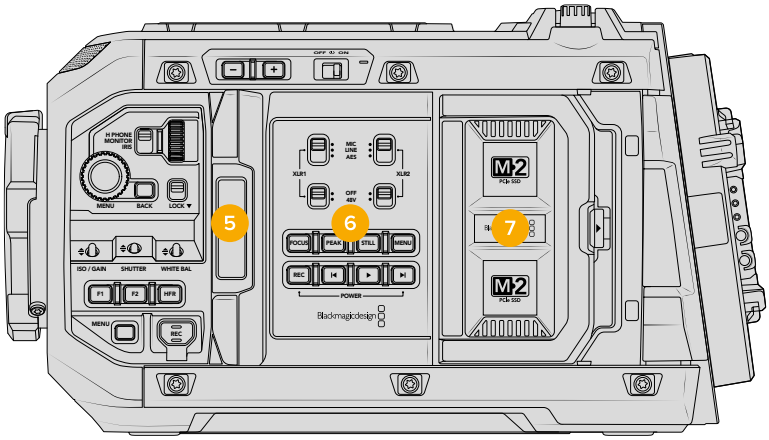

URSA Cine with foldout touchscreen open

5 LCD Touchscreen

The 5” touchscreen can be rotated 360 degrees letting you face the LCD towards the talent, or rotate and fold the screen back against the camera body for fast monitoring and setting changes.

6 Internal Control Panel

When your URSA Cine’s foldout monitor is open, you have access to the internal control panel. Use the controls here to set your audio inputs as well as phantom power settings. You can also access auto focus, focus peaking, still image capture, menu, record and playback controls. See the section ‘control buttons’ for more information.

7 Blackmagic Media Module Bay

Blackmagic Media Module allows you to change the media types you use with URSA Cine cameras. The module bay is where these modules can be mounted as URSA Cine’s internal media. Refer to the ‘Blackmagic Media Module’ section for information on how to load and unload M.2 and CFexpress media modules.

Camera Right

URSA Cine’s right side panel features a dedicated assist station with an LCD touchscreen, audio control knobs, settings and record buttons, a focus tape measure pin and a safety lock switch for preventing accidental settings changes.

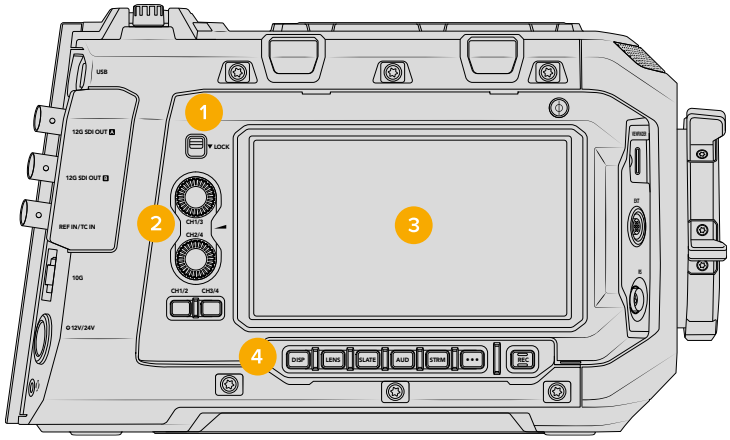

1 Lock Switch

Move the switch down to lock the control panel and up to unlock it. Locking the panel lets you prevent any unintended changes to settings or accidental streaming interruptions.

2 Audio Controls

Rotate the audio control knobs clockwise or counterclockwise to increase or decrease the audio levels. Monitor the audio levels on the audio station LCD touchscreen.

3 LCD Assist Touchscreen

The side panel 5” LCD touchscreen lets you access all the settings for your camera, plus displays your slate or a focus page with indicators to help you gauge perfect focus. This allows multiple people such as camera assistants, sound recordists and other crew members to work quickly with the camera on set.

4 Assist Station Buttons

The buttons on the assist station let you turn the status display on or off, access the focus page, open the slate or menu and more. Detailed information on the assist buttons and how to turn on the streaming overlay is available in the ‘assist station’ section later in this manual.

Rear Panel

The rear panel features two 12G-SDI connectors that let you plug separate SDI video outputs into monitors and other SDI equipment with optional overlays. The BNC reference connector provides the abiliity to lock the camera to external reference and timecode. The 10G Ethernet port is used to connect to a computer or network for transferring files and streaming video. Both 10G Ethernet and 1G Ethernet is supported.

Power is connected via the 8 pin connector with a locking plug to prevent accidental removal and a 3.5mm headphones jack lets you plug in headphones or a smartphone headset for live production talkback when streaming to an ATEM switcher.

The B mount battery plate arrives already attached to your camera, however you can remove and replace with third party plates via rear panel mounting points and a Molex power connector.

1 Battery Mount Plate

Blackmagic URSA Cine and URSA Cine + EVF kits ship with a B-mount battery plate already attached to the rear panel for 24 volt B mount batteries. However, as the rear panel has plate mounting points and a recessed Molex connector, it will accept other battery plates as well. You can attach a Blackmagic URSA Cine Battery Plate Vlock or Blackmagic URSA Cine Battery Plate Gold for mounting 24 volt Helix Max batteries.

There are also third party battery plates such as the 26V Gold Mount Plus Bracket for URSA Cine from Anton Bauer if you need to use other batteries. The connector supplies power to and from the camera as well as some data information and when in use can accept a 12 to 34 Volt input, although the 24 to 34 Volt range is recommended. It can also output a regulated 12 Volts at up to 1.5 Amps.

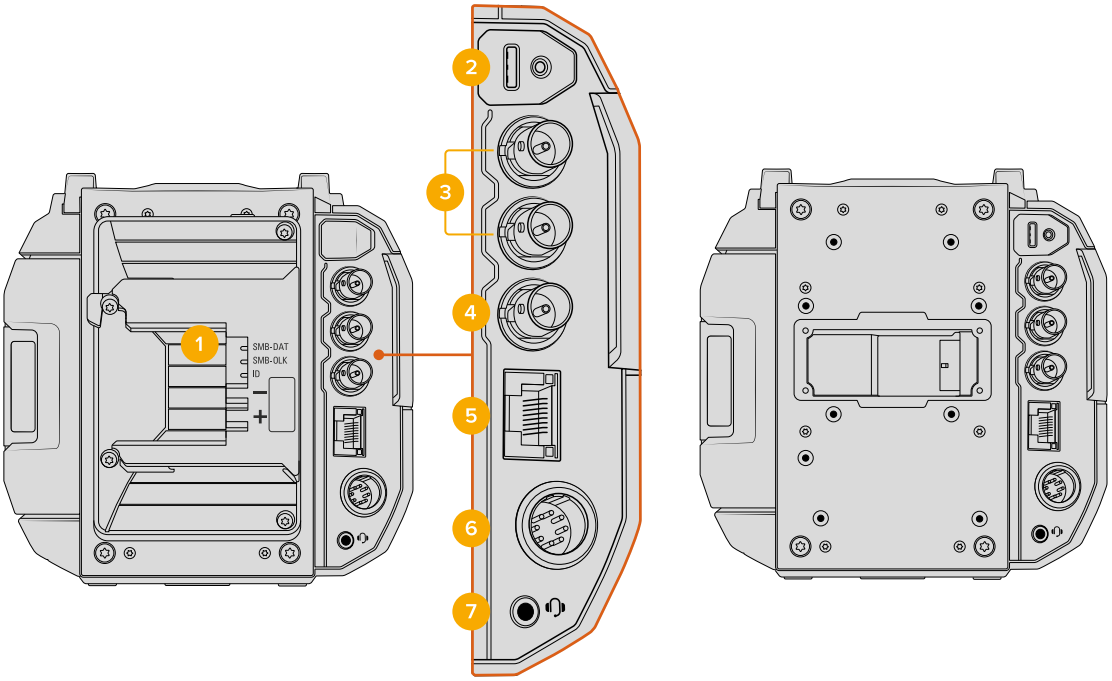

2 Rear USB Port

The lockable USB port on the rear panel is used to connect Blackmagic Focus Demand and Zoom Demand or USB Ethernet adapters. This is useful for live or multicam work if you want to connect the camera to a dedicated control network that is separated from the camera's 10G RJ45 connector.

3 12G-SDI Outputs

Connect the 12G-SDI outputs to SDI equipment such as Blackmagic SmartView monitors, HyperDeck disk recorders and live grading suites. Each SDI output can be set to display separate overlays using your camera's 'monitor' page 'SDI A' and 'SDI B' menu settings.

SDI B becomes an input when your camera's record resolution and codec is set to 4K live SMPTE-2110 or when the 'program' is selected for your reference source on page 3 of the setup menu. This lets you plug an SDI program return feed from a switcher. Press the 'PGM' button on the ergonomic control panel on the left side of the camera to view the program return. If you have an URSA Cine Studio Viewfinder plugged into your camera, you can view the program return by pressing the 'PGM' button on the left side of the screen.

4 Reference and Timecode In

This BNC input automatically recognizes and switches between timecode and reference input signals. Synchronize Blackmagic URSA Cine to a common reference signal, such as tri-level sync. It's worth noting that to use a reference signal through this input, you must set your reference source to 'external' in your URSA Cine's setup menu.

Alternatively you can use this connector to match an external timecode source to sync up multiple cameras, or audio and picture when shooting dual system. This ensures audio and picture, or video from multiple cameras, can be easily synchronized during post production.

When external timecode with a matching frame rate is plugged into this connector the camera will lock to the incoming timecode automatically. The 'EXT' logo will appear next to the timecode counter on URSA Cine's LCDs when external timecode is locked. If you unplug the cable, timecode will remain jammed and the 'EXT' logo will switch to 'INT' to let you know it is now running from URSA Cine's internal timecode clock.

TIP It's worth mentioning that if external timecode is unplugged and the camera is turned off for more than a few minutes, the 'INT' icon will disappear and timecode will need to be rejammed. When URSA Cine is constantly powered, the internal clock is accurate to maintain sync to within a frame for up to 8 hours. If you are jamming all of your cameras, rather than keeping timecode clocks permanently connected, it's recommended to rejam after break times to ensure you maintain constant sync.

5 10G Ethernet Port

You camera's 10G Ethernet port is a very useful connector that can do lots of things. Connect your URSA Cine to a network, or directly to your computer using a standard CAT6 network cable. Your camera is set to DHCP by default, which means your network will assign it an IP address automatically.

Once connected to a network you can access files from your camera's media module using SMB, FTP or via a web browser using web media manager. These three options can be easily enabled in the 'network access' section of the Blackmagic Camera Setup' utility while your camera is connected to your computer via USB. For more information, refer to the 'Blackmagic Camera Setup' section in this manual.

6 24 Volt Power Input

Use the 8 pin DC connector to plug in power from external sources such as the supplied 24v 250W power adapter or very large portable block batteries. While this connector accepts an input range from 12-34 volts for optimal results power supplies in the 24-34 Volts range is recommended.

7 Headphone

The 3.5mm jack output is used for headphone monitoring during recording and playback. You can plug in any set of headphones that uses a 3.5mm TRRS connector, such as iPhone and Android compatible headsets.

Top Panel

The top panel features balanced XLR connectors for plugging in microphones and audio equipment. WiFi antennas are attached to the antenna mounts towards the rear panel on each side of the XLR connectors.

USB ports located towards the right side assist station let you connect accessories, or connect to a computer to update the camera. 1/4" 20 and 3/8" 16 mounting points are provided for attaching the top handle and accessories.

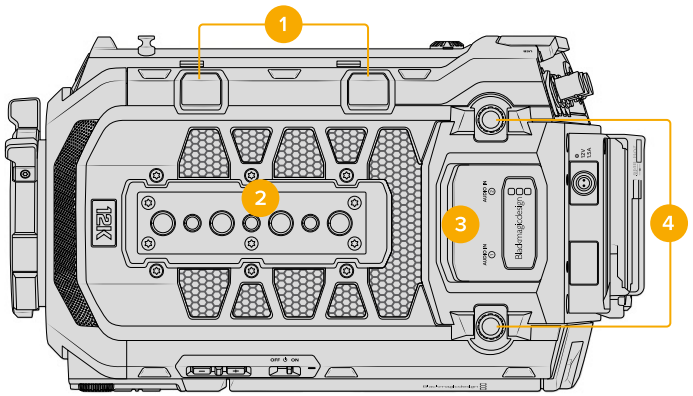

External analog audio can be plugged into the balanced XLR connectors on the top panel

1 USB-C Ports

The USB ports on the top edge of the camera are for expansion. The port closer to the rear panel is used to connect to a computer when updating the camera, or for using cellular data tethering when streaming from URSA Cine. You can also plug in a Blackmagic PYXIS Monitor into one of these top USB ports for clean feed monitoring. Some monitors with single lane USB-C display port can also be used.

2 Top Panel Mounting Points

Your camera's top panel contains seven strong mounting points for attaching the top handle and accessories. The mounting points include three 1/4" 20 and four 3/8" 16 threads. To ensure proper ventilation, take care not to obstruct your camera's fan vents when connecting accessories.

3 XLR Audio In

Use the balanced XLR inputs to plug in external analog audio from professional equipment such as audio mixers, PA systems or external microphones. The XLR connectors supply 48V phantom power so you can use microphones that aren't self powered. Refer to the 'internal control panel' section for more information on phantom power.

4 WiFi Antenna Points

These points are for attaching WiFi antennas to the camera. Please ensure that you use the antennas that were included with your URSA Cine camera.

To attach the antennas:

1. First unscrew the dust caps from each point and keep them somewhere safe.
2. Connect the included WiFi antennas by screwing them onto each point until they feel secured to the camera. Avoid over tightening to prevent stripping their threads.

Underside

The underside features additional mounting points for attaching the 19mm and 15mm URSA Cine baseplates, or for attaching the camera to rigs and gripping equipment.

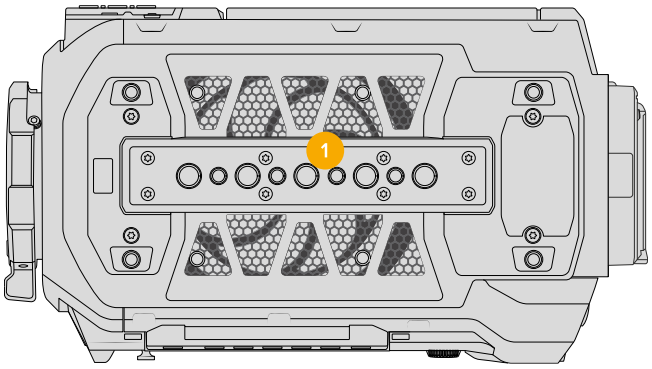

1 Underside Mounting Points

Your camera's underside panel contains nine strong mounting points for attaching the URSA Cine baseplate and accessories. The mounting points include four 1/4" 20 and five 3/8" 16 threads. To ensure proper ventilation, take care not to obstruct your camera's fan vents when connecting accessories.

Recording

Start recording by pressing any of the red record buttons on your camera. Record buttons are located on the forward control panel, the internal control panel behind the fold out touchscreen, the assist station control panel and both LCD touchscreens. A record button is also featured on the URSA Cine EVF. Press the record button again to stop recording.

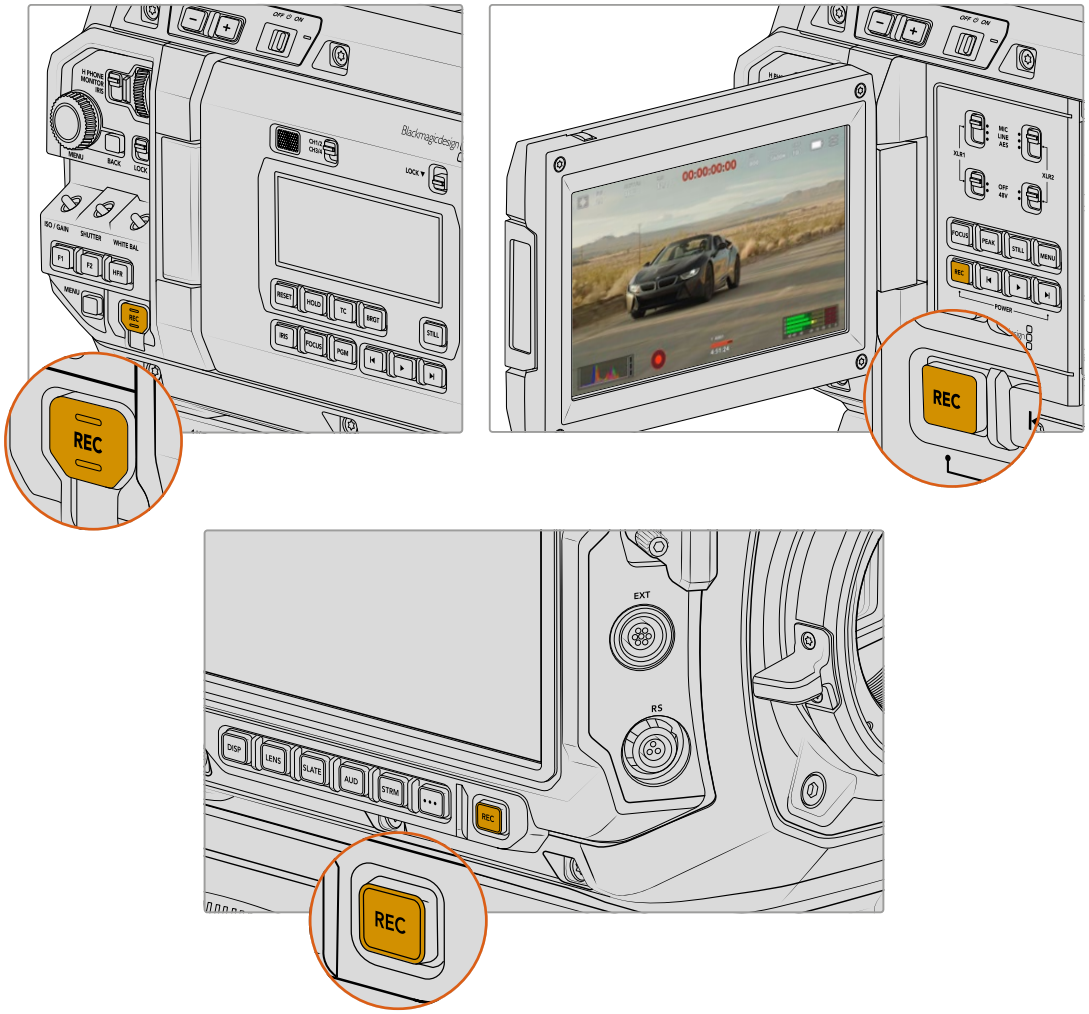

TIP If you have a Blackmagic PYXIS Monitor or an URSA Cine Studio Viewfinder to the ‘viewfinder’ USB port with overlays visible, you can also tap the record button on the touchscreen display to start and stop recording.

It’s worth noting that when the URSA Cine resolution is set to 4K Live SMPTE-2110 the red record buttons on the body of the camera are disabled.

Choosing the Resolution, Aspect Ratio and Codec

Depending on which model you are using, your URSA Cine can record from 4K up to 12K or 17K open gate at high frame rates using Blackmagic RAW. You can choose from a range of aspect ratios to meet the delivery requirements of your project. For example, you could shoot 2.4:1 widescreen for cinema or 16:9 for episodic shows that are likely to be viewed on a television. Squarer aspect ratios such as 3:2 open gate and 6:5 provide great options for shooting anamorphic and desqueezing to widescreen, or for providing extra vertical recording that can be used for vertical reframing when shooting for 2:1 or 16:9 final delivery.

Proxy Recording

Your URSA Cine records proxies automatically when you record clips and saves them as separate 1920x1080 HD H.264 files. This means depending on which camera you are using, you can record Blackmagic RAW up to full 12K or 17K open gate resolution at high frame rates then edit the proxies using a modest computer and when you are finished you can then export at full delivery maximum resolution. If you have synced your camera to Blackmagic Cloud, the proxies can also be uploaded to personal storage and projects while you are still shooting. For more information about proxy workflows and Blackmagic Cloud, refer to the section named 'uploading clips to Blackmagic Cloud'. To turn off proxy recording toggle the proxy recording setting on the second page of the record menu to 'off'.

Choosing Frame Rates

Your camera is able to shoot video using many different frame rates and you may be wondering which is the best one to use. Your camera's sensor frame rate can also have a big impact on the 'look' of footage. Generally, when selecting a sensor frame rate, there are some common items to consider. For many years, there have been presentation standards for film and television. These have set frame rates that differ between countries, but all share the same purpose; to display an efficient number of frames every second that portrays pleasing and convincing motion.

Cinema, for example, uses a standard 24 frames per second and while there have been recent experiments with faster frame rates, 24 frames per second remains widely accepted for international audiences. Television frame rates have generally conformed to technical broadcast standards for each country. For example, if you were making television content you would typically record using 29.97 frames per second for North American distribution, and 25 frames per second for Europe.

However, as technology has improved, today we have more choices and broadcast standards are changing. It is now common for sporting events to be recorded and broadcasted at higher frame rates. For example, some sporting events are recorded and broadcasted at up to 59.94 frames per second in North America, and 50 frames per second in Europe. This provides smoother motion on fast action and appears more lifelike. Alternatively, streaming and online broadcasters normally use frame rates similar to television, however there is more freedom to experiment due to user selectable viewing formats, and being limited only to what the audience's screens are capable of displaying.

Generally, when choosing a frame rate for a project, let your delivery format guide your choice. Your camera's project frame rate should be set to this, and your sensor frame should be set to 'match'. This means your clips will play back at the same speed the event happened in real life. If you are looking to create an interesting effect, for example slow motion, then you can set the sensor frame rate to a higher setting. The higher the sensor frame rate compared to the project frame rate, the slower the playback speed. For example, URSA Cine allows you to shoot at very high sensor frame rates for extreme slow motion.

For more information on using off speed sensor frame rates to achieve creative effects, refer to the ‘touchscreen controls’ section.

Shooting at High Frame Rates

When shooting at high frame rates, your camera captures an increased number of frames per second when compared with the traditional sync speed frame rates of 24, 25 and 30 frames per second. This means that the image sensor has less time to collect light for each frame it captures and the resulting image from your camera will be darker.

So for example, if you switch from 25 to 50 frames per second, the amount of light reaching the sensor will be halved. To maintain your exposure you need to compensate for this change by opening up your lens an extra stop, by opening up your shutter angle from 180° to 360° or by adding some extra lighting to the scene that you are shooting.

When shooting at 120 frames per second you have 5 times less light so you may need to adjust multiple things such as lens aperture, shutter angle and lighting to achieve the same level of exposure.

Another thing to be mindful of when shooting at higher frame rates, is the fact that electronic light sources can add flicker to your recorded image. Specifically, when shooting at frame rates above 100 frames per second in a 50Hz environment or 120 frames per second in a 60Hz environment, artificial tungsten, fluorescent and LED light sources may introduce some flicker to your images. You may not see these flicker issues when previewing the scene on your LCD and SDI feed or while recording, so it’s important to perform a test shoot with the lights you plan to use and to play the clip back to check for flicker.

Your shutter setting can also affect the visibility of flicker when shooting under lights, so your URSA Cine can automatically calculate and display flicker free shutter options for your current frame rate. Note that the characteristics of individual light sources may still cause flicker even when using flicker free values. For more information, refer to the ‘touchscreen controls’ section.

If you have opened up your shutter to the slowest shutter speed or widest shutter angle possible and are still seeing flicker in recorded footage, you may need to consider using different light sources for your scene or look into using a faster lens.

Maximum Frame Rates

The tables in this section contain available codecs, resolutions and their maximum sensor frame rates. Please note that when running your URSA Cine with power supplies or batteries under 18 volts that you will be limited to 80 frames per second as your maximum rate.

URSA Cine 12K LF Maximum Sensor Frame Rates

12K Large Format			
Aspect Ratio	**Pixel Count**	**Sensor Area**	**Maximum Frames per Second**
3:2	12,288 x 8,040	Open Gate	90
16:9	12,288 x 6,912	Full Width	90
17:9	12,288 x 6,480	Full Width	100
2.4:1	12,288 x 5,112	Full Width	120
6:5	9,648 x 8,040	Full Height	80

8K Large Format			
Aspect Ratio	**Pixel Count**	**Sensor Area**	**Maximum Frames per Second**
3:2	8,192 x 5,360	Open Gate	144
16:9	8,192 x 4,608	Full Width	168
17:9	8,192 x 4,320	Full Width	180
2.4:1	8,192 x 3,408	Full Width	224
6:5	6,432 x 5,360	Full Height	144

4K Large Format			
Aspect Ratio	**Pixel Count**	**Sensor Area**	**Maximum Frames per Second**
3:2	4,096 x 2,680	Open Gate	144
16:9	4,096 x 2,304	Full Width	168
17:9	4,096 x 2,160	Full Width	180
2.4:1	4,096 x 1,704	Full Width	224
6:5	3,216 x 2,680	Full Height	144

4K B4			
Aspect Ratio	**Pixel Count**	**Sensor Area**	**Maximum Frames per Second**
16:9	4,608 x 2,592	B4 Crop	240

9K Super 35			
Aspect Ratio	**Pixel Count**	**Sensor Area**	**Maximum Frames per Second**
3:2	9,408 x 6,264	4 perf Super 35	100
16:9	8,688 x 4,896	3 perf Super 35	130
17:9	9,312 x 4,896	3 perf Super 35	130
2.4:1	9,312 x 3,864	2 perf Super 35	160
6:5	7,680 x 6,408	4 perf Super 35	100

URSA Cine 17K 65 Maximum Sensor Frame Rates

17K 65mm			
Aspect Ratio	**Pixel Count**	**Sensor Area**	**Maximum Frames per Second**
2.2:1	17,520 x 8,040	Open Gate	60
2.4:1	17,520 x 7,296	Full Width	60
2:1	16,128 x 8,040	Full Height	60
17:9	15,360 x 8,040	Full Height	60
16:9	14,304 x 8,040	Full Height	60

12K Full Frame			
Aspect Ratio	**Pixel Count**	**Sensor Area**	**Maximum Frames per Second**
3:2	12,288 x 8,040	Full Height	60
16:9	12,288 x 6,912	Cropped	70
17:9	12,288 x 6,480	Cropped	75
2.4:1	12,288 x 5,112	Cropped	90
6:5	9,648 x 8,040	Full Height	60

8K 65mm			
Aspect Ratio	**Pixel Count**	**Sensor Area**	**Maximum Frames per Second**
2.2:1	11,680 x 5,360	Open Gate	100
2:1	10,752 x 5,360	Full Height	100

8K Full Frame			
Aspect Ratio	**Pixel Count**	**Sensor Area**	**Maximum Frames per Second**
3:2	8,192 x 5,360	Full Height	100
16:9	8,192 x 4,608	Cropped	120
17:9	8,192 x 4,320	Cropped	130
2.4:1	8,192 x 3,408	Cropped	170

4K 65mm			
Aspect Ratio	**Pixel Count**	**Sensor Area**	**Maximum Frames per Second**
2.2:1	5,840 x 2,680	Open Gate	100
2:1	5,376 x 2,680	Full Height	100

4K Full Frame			
Aspect Ratio	**Pixel Count**	**Sensor Area**	**Maximum Frames per Second**
3:2	4,096 x 2,680	Full Height	100
16:9	4,096 x 2,304	Full Width	120
17:9	4,096 x 2,160	Full Width	130
2.4:1	4,096 x 1,704	Full Width	170

Shooting off speed lets you make creative decisions and achieve the look that you want. Depending on which model you are using, your URSA Cine can shoot at 12K or 17K resolution at high frame rates. When you shoot high frame rates with low compression, your camera uses extreme bitrates, so it is important to make allowances for the additional storage requirements or choose a slightly higher compression setting.

Project and Sensor Frame Rates

After setting your codec and resolution, you should set your 'project' and 'sensor' frame rates. Refer to the 'recording' section in this manual for more information about frame rates.

The project frame rates available are:

23.98, 24, 25, 29.97, 30, 50, 59.94, and 60 frames per second. 90 frames per second is also available as a recording rate on URSA Cine 12K LF

Record Durations

Maximum record durations will differ based on the video standard, project frame rate and media capacity. For example, the storage rate for 8K Blackmagic RAW open gate using 8:1 constant bitrate compression is approximately 200 MBs per second. At 24 frames per second you can record approximately 11.1 hours on Blackmagic Media Module 8TB. At the same settings you can record approximately 42 Minutes of video on a 512 GB CFexpress card.

It should be noted that record duration on CFexpress cards can also vary slightly between cards from different manufacturers. It can also vary depending on whether the storage media is formatted as exFAT or Mac OS X Extended. For a close approximation of maximum record durations we recommend using the record durations calculator at the Blackmagic Design support center at https://www.blackmagicdesign.com/products/blackmagicursacine#data-rate-calculator

Data Rate Tables

URSA Cine can record at extremely high data rates. When recording on Blackmagic Media Module 8TB, the module is fast enough to record the highest frame rates at the highest resolution.

Maximum Data Rates at 24p with Blackmagic RAW Constant Bitrate

17K 65mm							
Aspect Ratio	**Pixel Dimensions**	**Sensor Area**	**Frame Rate**	**Blackmagic RAW 3:1**	**Blackmagic RAW 8:1**	**Blackmagic RAW 12:1**	**Blackmagic RAW 18:1**
2.2:1	17,520 x 8,040	Open Gate	24	1.7 GB/s	638 MB/s	425 MB/s	284 MB/s
2:1	16,128 x 8,040	Full Height	24	1.6 GB/s	587 MB/s	392 MB/s	261 MB/s
17:9	15,360 x 8,040	Full Height	24	1.5 GB/s	559 MB/s	373 MB/s	249 MB/s
16:9	14,304 x 8,040	Full Height	24	1.4 GB/s	521 MB/s	348 MB/s	232 MB/s
2.4:1	17,520 x 7,296	Full Width	24	1.5 GB/s	579 MB/s	386 MB/s	258 MB/s

12K Large Format							
Aspect Ratio	**Pixel Dimensions**	**Sensor Area**	**Frame Rate**	**Blackmagic RAW 3:1**	**Blackmagic RAW 8:1**	**Blackmagic RAW 12:1**	**Blackmagic RAW 18:1**
3:2	12,288 x 8,040	Open Gate	24	1.2 GB/s	448 MB/s	299 MB/s	199 MB/s
16:9	12,288 x 6,912	Full Width	24	1.0 GB/s	385 MB/s	257 MB/s	171 MB/s
17:9	12,288 x 6,480	Full Width	24	963 MB/s	361 MB/s	241 MB/s	161 MB/s
2.4:1	12,288 x 5,112	Full Width	24	761 MB/s	285 MB/s	190 MB/s	127 MB/s
6:5	9,648 x 8,040	Full Height	24	939 MB/s	352 MB/s	235 MB/s	157 MB/s

8K Large Format							
Aspect Ratio	**Pixel Dimensions**	**Sensor Area**	**Frame Rate**	**Blackmagic RAW 3:1**	**Blackmagic RAW 5:1**	**Blackmagic RAW 8:1**	**Blackmagic RAW 12:1**
3:2	8,192 x 5,360	Open Gate	24	533 MB/s	320 MB/s	200 MB/s	133 MB/s
16:9	8,192 x 4,608	Full Width	24	458 MB/s	275 MB/s	172 MB/s	115 MB/s
17:9	8,192 x 4,320	Full Width	24	430 MB/s	258 MB/s	161 MB/s	108 MB/s
2.2:1	11,680 x 5,360	Open Gate	24	758 MB/s	455 MB/s	284 MB/s	190 MB/s
2:1	10,752 x 5,360	Full Height	24	698 MB/s	419 MB/s	262 MB/s	175 MB/s
2.4:1	8,192 x 3,408	Full Width	24	340 MB/s	204 MB/s	128 MB/s	86 MB/s
6:5	6,432 x 5,360	Full Height	24	419 MB/s	252 MB/s	157 MB/s	105 MB/s

4K Large Format							
Aspect Ratio	**Pixel Dimensions**	**Sensor Area**	**Frame Rate**	**Blackmagic RAW 3:1**	**Blackmagic RAW 4:1**	**Blackmagic RAW 5:1**	**Blackmagic RAW 6:1**
3:2	4,096 x 2,680	Open Gate	24	135 MB/s	101 MB/s	81 MB/s	68 MB/s
16:9	4,096 x 2,304	Full Width	24	116 MB/s	88 MB/s	70 MB/s	59 MB/s
17:9	4,096 x 2,160	Full Width	24	109 MB/s	82 MB/s	66 MB/s	55 MB/s
2.2:1	5,840 x 2,680	Open Gate	24	191 MB/s	144 MB/s	115 MB/s	95.9 MB/s
2:1	5,376 x 2,680	Full Height	24	176 MB/s	132 MB/s	106 MB/s	88.4 MB/s
2.4:1	4,096 x 1,704	Full Width	24	86 MB/s	65 MB/s	52 MB/s	44 MB/s
6:5	3,216 x 2,680	Full Height	24	106 MB/s	80 MB/s	64 MB/s	54 MB/s

4K B4 Crop							
Aspect Ratio	**Pixel Dimensions**	**Sensor Area**	**Frame Rate**	**Blackmagic RAW 3:1**	**Blackmagic RAW 4:1**	**Blackmagic RAW 5:1**	**Blackmagic RAW 6:1**
16:9	4,608 x 2,592	B4 Crop	24	147 MB/s	55 MB/s	37 MB/s	24 MB/s

9K Super 35 on URSA Cine 12K							
Aspect Ratio	**Pixel Dimensions**	**Sensor Area**	**Frame Rate**	**Blackmagic RAW 3:1**	**Blackmagic RAW 8:1**	**Blackmagic RAW 12:1**	**Blackmagic RAW 18:1**
3:2	9,408 x 6,264	4 perf Super 35	24	714 MB/s	268 MB/s	179 MB/s	119 MB/s
16:9	8,688 x 4,896	3 perf Super 35	24	516 MB/s	194 MB/s	129 MB/s	87 MB/s
17:9	9,312 x 4,896	3 perf Super 35	24	553 MB/s	208 MB/s	139 MB/s	92.5 MB/s
2.4:1	9,312 x 3,864	2 perf Super 35	24	437 MB/s	164 MB/s	110 MB/s	72 MB/s
6:5	7,680 x 6,408	4 perf Super 35	24	597 MB/s	224 MB/s	149 MB/s	100 MB/s

A data rate calculator is provided on our website if you want to estimate the variables for Blackmagic RAW compression and storage sizes. The calculator is located here: https://www.blackmagicdesign.com/products/blackmagicursacine#data-rate-calculator

Dynamic Range

Blackmagic cameras are able to capture in wide dynamic range which gives you lots of flexibility when capturing images and also when color grading in DaVinci Resolve. This section contains two tables showing the available dynamic range in your URSA Cine.

URSA Cine Dynamic Range Chart for 17K, 2K, 9K and 4.6K Resolutions

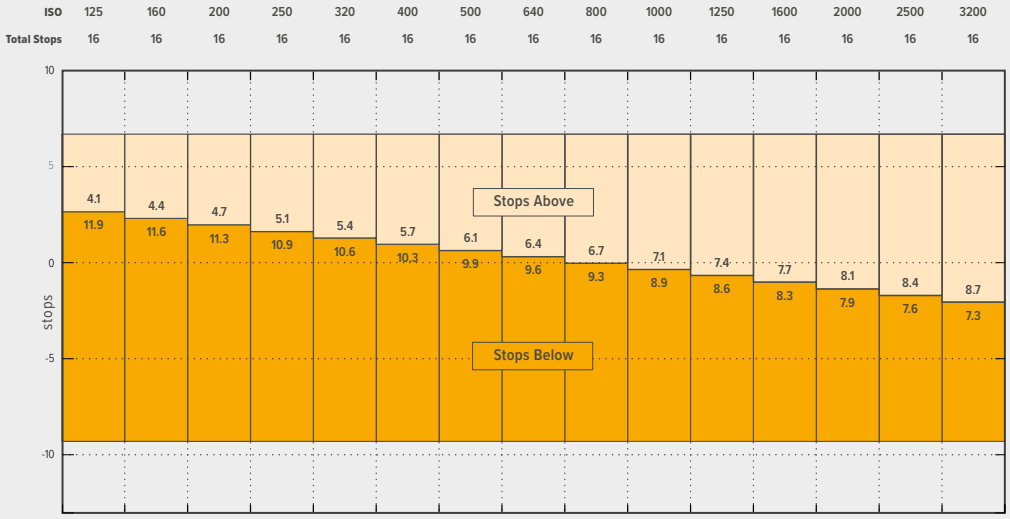

The table above shows the distribution of dynamic range above and below mid gray in the 17K, 12K, 9K and 4.6K resolutions for Blackmagic RAW recording. This also applies to the 4K Live SMPTE-2110 B4 format.

When shooting in 8K and 4K, the image sensor runs in a different way and uses sensor hardware scaling allowing you to capture in 8K or 4K without cropping down or changing your field of view at all. This gives you slightly smaller file sizes and also runs the sensor twice as fast. The following table shows the distribution when shooting in any of the 8K or 4K Blackmagic RAW resolutions other than the 4.6K crop format. This lower table also represents the distribution of dynamic range when using the 4K Live SMPTE-2110 for the Large Format or Super 35 options with URSA Cine 12K LF.

URSA Cine Dynamic Range Chart for 8K and 4K Resolutions

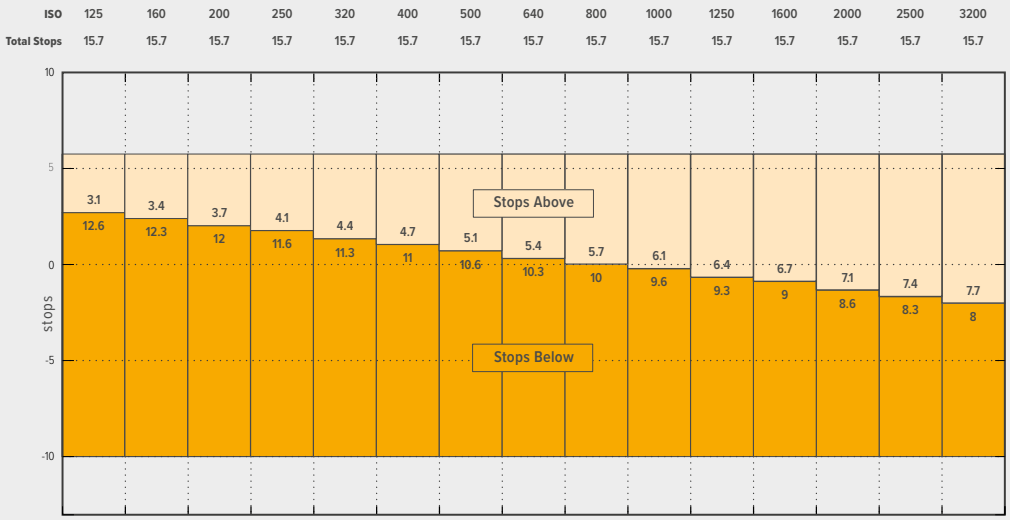

As you can see in the second table, when shooting in the 8K and 4K resolutions, the dynamic range distribution is effectively shifted by one stop for each given ISO setting compared to the 17K, 12K, 9K and 4.6K resolutions. While there is also a very small decrease in the total stops of dynamic range there is more information in the shadows but 1 stop less highlight headroom.

Playback

Once you have recorded your clips, you can use the transport control buttons to play them back. Press the ‘play’ button once for instant playback and you’ll see your recorded video on URSA Cine’s LCD touchscreen. Your clips can also be viewed on any display connected to your camera’s SDI outputs or front and top USB-C ports, such as an URSA Cine EVF, URSA Cine Studio Viewfinder or Blackmagic PYXIS Monitor.

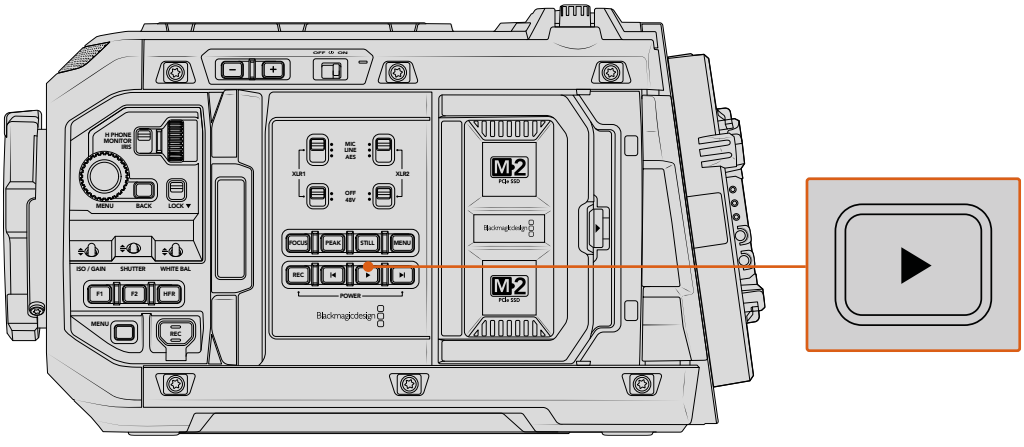

URSA Cine playback controls

NOTE Blackmagic URSA Cine will play back clips of different quality settings as long as they are in the same frame rate and resolution.

Press the forward and reverse buttons to skip to the start or end of clips. Press the ‘reverse skip’ button once to go to the start of the current clip or press twice to skip back to the start of the previous clip. Hold the ‘forward’ or ‘reverse skip’ button to play or reverse at 2x speed. Once shuttling forward or backwards, press the ‘fast forward’ or ‘reverse skip’ buttons twice for 4x, three times for x8 and four times for x16. You can also use the forward and reverse skip buttons to open or close the iris on compatible lenses while recording clips.

When recording a clip using a sensor frame rate that differs from your project frame rate, your clip’s playback speed will also differ. For example, imagine you have set your camera’s project frame rate to match your post production timeline of 24 frames per second. If you record a clip with your sensor frame rate set to 60 frames per second, your clips will play back in slow motion on both the camera and on your post production timeline.

TIP Refer to the ‘recording’ section of this manual for more information about frame rates.

Media Pool

Your Blackmagic URSA Cine features a media pool that lets you play back, search and sort your recorded clips using a browser interface. You can also delete clips and sync clips to Blackmagic Cloud via the Internet. For example, uploading clips to DaVinci Resolve projects or directly to your own private Blackmagic Cloud storage.

To open the media pool, tap one of the storage indicators at the bottom of your camera’s touchscreen display.



Tap a storage indicator to open the media pool

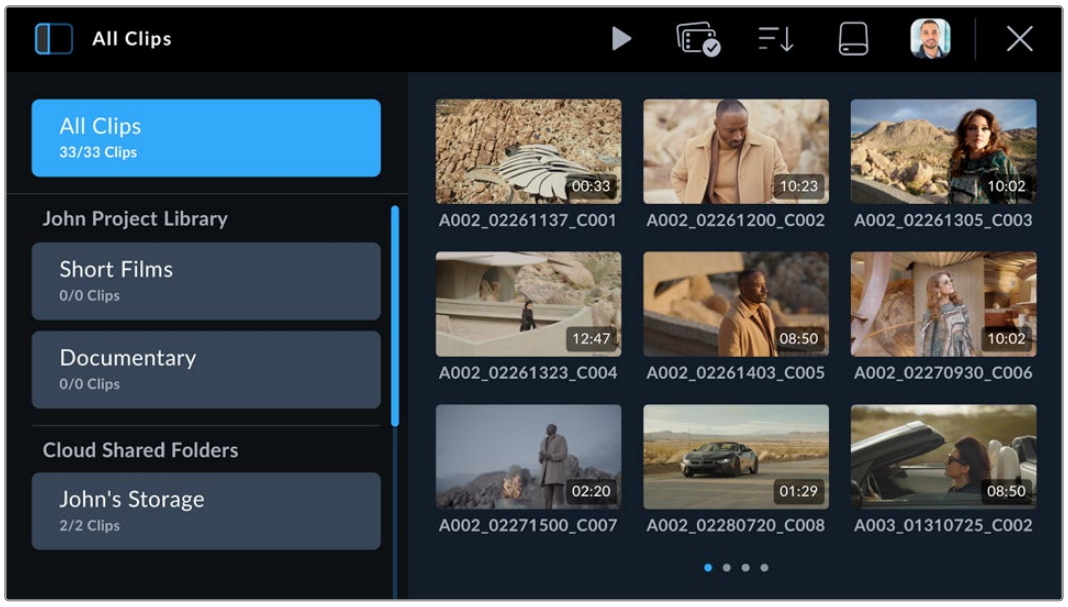

The browser is the main page of the media pool

The main page browser displays thumbnails of all the recorded clips on all media connected to your camera. There are three rows of thumbnails and as more clips are added, you can swipe to the next page of thumbnails using the touchscreen. Page indicators at the bottom of the display show how many pages of clips are available.

Sidebar

The sidebar icon at the top left corner opens or closes the media pool side bar. Here, you can select which Blackmagic Cloud projects you want to upload clips to, or to upload clips directly to your personal Blackmagic Cloud storage. More information about uploading clips to Blackmagic Cloud projects and storage is provided later in this section.

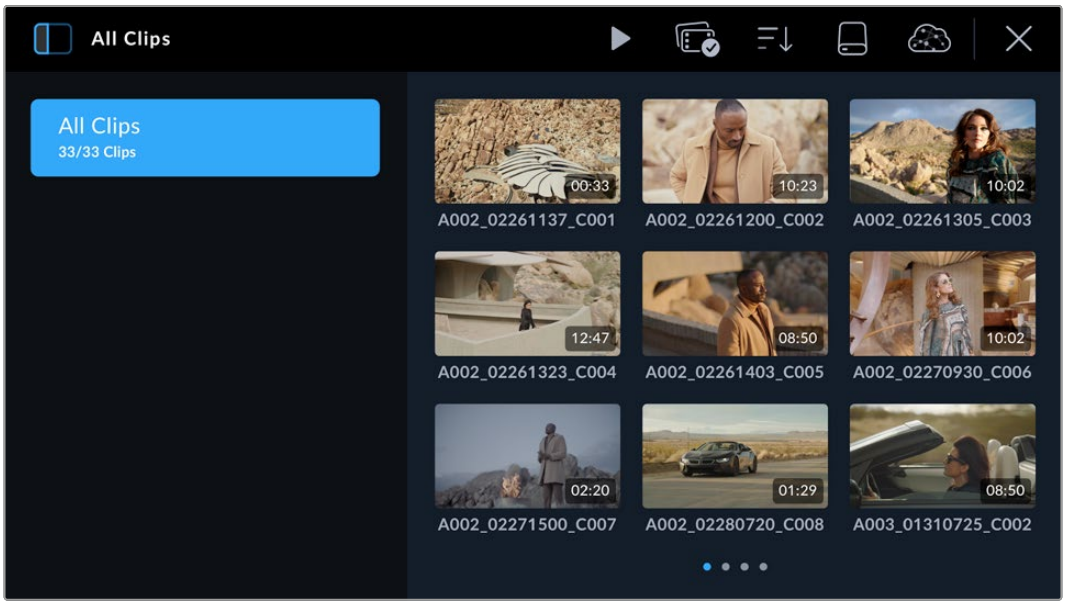

Tap the sidebar icon to open or close the media pool sidebar

Controls

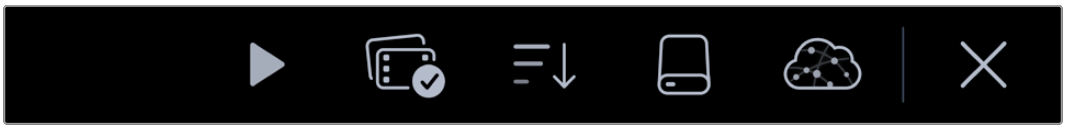

The control menu icons in the browser page of the media pool

The control menu icons at the top of the media pool browser page feature playback, group selection, media filter, media storage and Blackmagic Cloud log in status. When you select a single clip, multiple clips or a filtered clip list the control menu icons will change to display the relevant control options.

The next section describes how to use each control.

Playback



The playback control lets you play back clips recorded on your camera's media storage. You can play back a single clip, a sequence of selected clips, a list of clips filtered by a particular parameter or even play back all the clips on your connected media in one complete sequence.

Playing a Single Clip

Tap on a clip's thumbnail to enter the clip viewer. This displays the clip thumbnail larger on the LCD, lists the clip's file name and provides playback, upload, priority tagging, clip info and deletion controls. Swiping left and right on your camera's touchscreen lets you select a different clip.

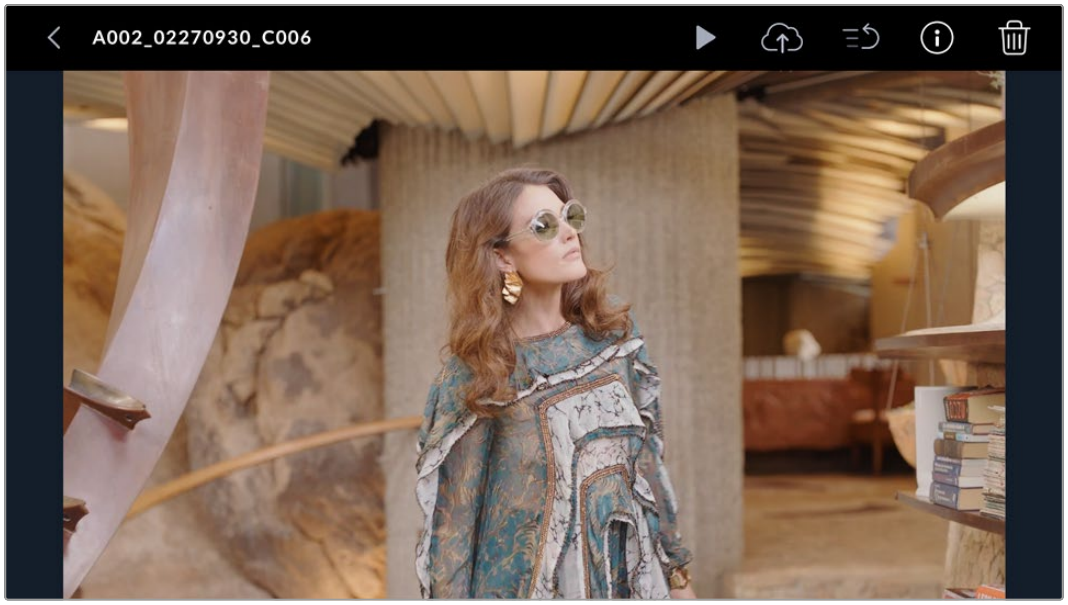



If you want to view the clip's metadata, tap on the information icon. This opens metadata that you can scroll through by dragging up and down. The heart icon lets you add a 'good take' tag to the clip's metadata, similar to marking a good take using your camera's slate feature.

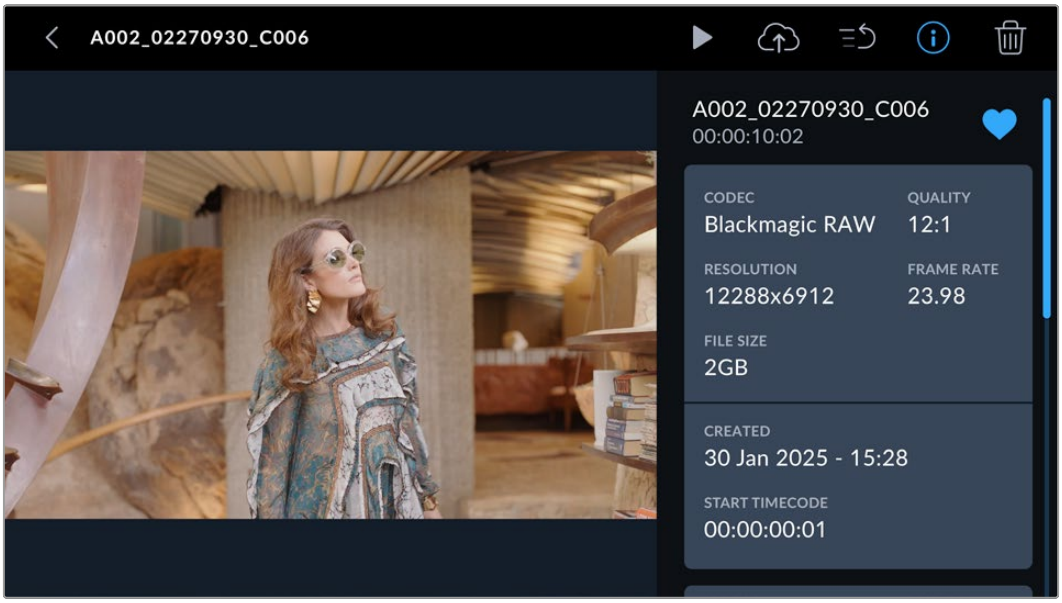

Tap the 'play' icon to play your chosen clip.

When your clip begins playing, you can then use the transport touch controls to scroll the play head backwards and forwards, skip to a different clip, or press ‘stop’ to return the LCD to the live recording view.



Above the clip name, the clip indicator lets you know the current clip number from the total clips that are cued. For example, clip number one from a total of fourteen clips recorded. If you have any media filters set, the total number of clips will reflect that. The bracketed number represents the total number of clips recorded on all media cards and external disks connected to your camera.

To return to the browser, tap on the ‘back’ arrow ahead of the clip name.

Playing All Clips

Tapping the play icon in the controls menu when in the browser will construct a timeline of all playable clips. The last clip recorded will be cued first so you can check it, or you can play through the entire timeline. If all of the clips in the browser were recorded using the same format and frame rate then everything recorded will play.

Playing a Sequence of Clips

To play back a sequence of clips, tap on the group select icon in the browser. With this icon enabled, tap on a clip. A small ‘play’ icon will appear in the top right hand corner of all the clips that share the same format and are available to play back together. You can now selectively tap on the clips you want to play back in a sequence.

Tap the ‘play’ icon, your camera will now play the sequence of clips and stop when the sequence ends.

Group Select



Tap on the group select icon to select a sequence of clips to play back, or to choose clips to upload to a Blackmagic Cloud project or storage. You can also select a group of clips to delete.

Media Filter



Tap on the media filter icon in the media library to open the filter editor. Here, you can tell your camera how to arrange the clips by preference. For example, you can choose to display clips from a specific media card, or select ‘upload status’ as a quick way of checking which clips have been uploaded to Blackmagic Cloud. Use the filter touchscreen menu to scroll up and down and select the filter options you want. When you have made your selection, tap the clip filter icon again to close the menu.

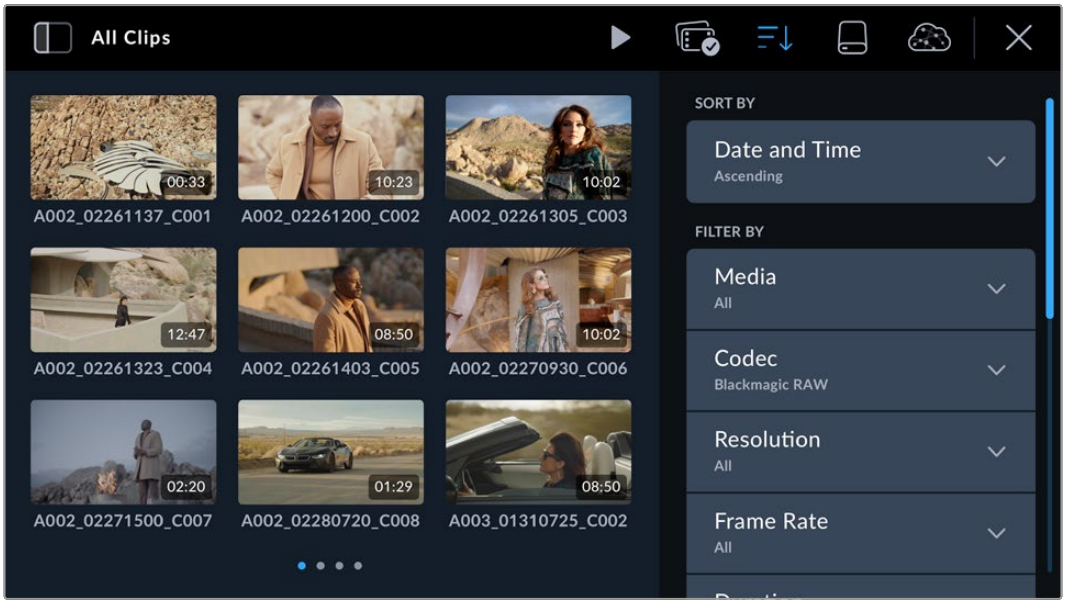

NOTE If you only ever want to play back or review one clip at a time then you can go to the eighth page of your camera's 'setup' menu and select 'single clip' for your playback preference.

Storage



Tap the media storage icon in the media library to enter the storage format page. This page lets you format Media Module 8TB and CFexpress cards connected to your camera. For information on how to format media, refer to the 'Blackmagic Media Module' section later in this manual.

Uploading Clips to Blackmagic Cloud

Blackmagic Cloud is a collaboration platform that lets you work together as a team and share DaVinci Resolve projects worldwide.

When you sign into Blackmagic Cloud on your URSA Cine you can choose to upload clips directly to a DaVinci Resolve Cloud project or to manually select the clips you want to upload from your camera's media pool. Alternatively clips can also be uploaded straight to your own private Blackmagic Cloud storage directly without syncing to a Resolve Cloud project.

You can choose to upload proxy files or both proxy and original files in your camera's setup settings on page 2 of the setup menu. Refer to the 'setup settings' section for more information.

Logging into Blackmagic Cloud

Before logging into Blackmagic Cloud on your URSA Cine, you will need to connect your camera to the Internet.

Plug into a network with Internet access via Ethernet, or connect your smartphone to your URSA Cine's USB-C port. When connecting using your smartphone, enable your phone's tethering or hotspot feature. Once connected to the Internet, the Blackmagic Cloud icon at the top of your camera's touchscreen will turn blue.

To log into your Blackmagic Cloud account:

1 Tap the Blackmagic Cloud icon in the controls menu.

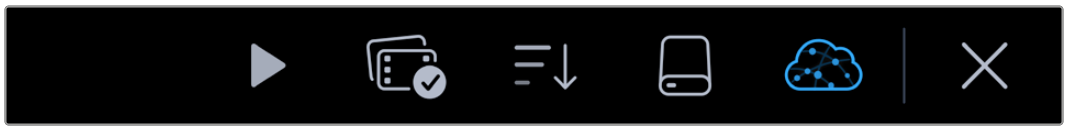

2 Use your smartphone's camera to scan the QR code on your URSA Cine's touchscreen and follow the prompts on your phone to sign your camera into your Blackmagic Cloud account. Alternatively, you can visit the web address displayed on your camera's touchscreen display and enter the eight digit code.

To enter your login details manually, tap 'manual login' and use the touchscreen keyboard to enter your email address and password.

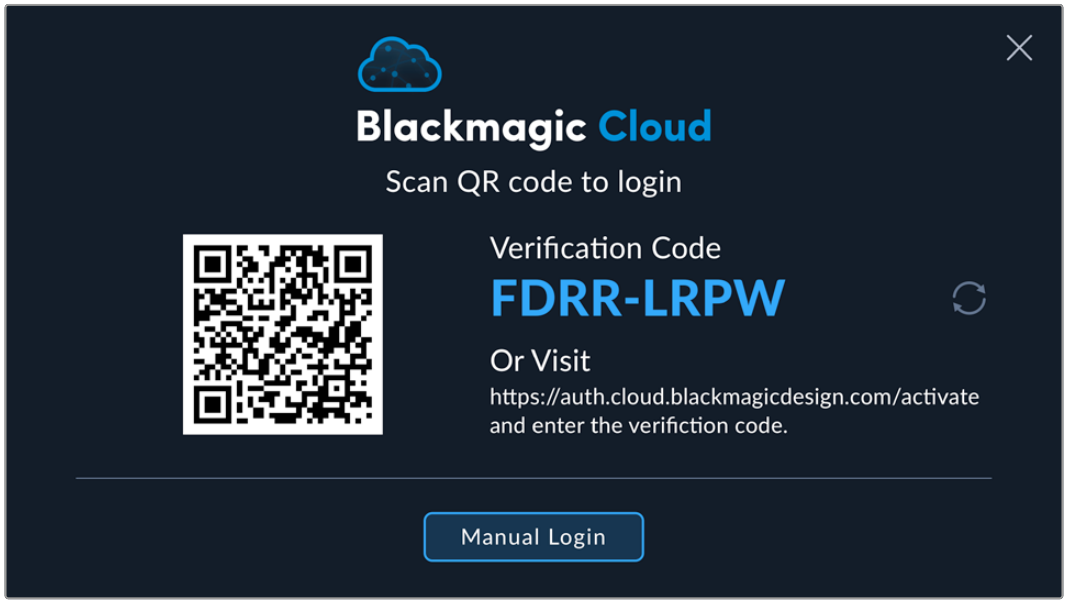

3 If you are part of a Blackmagic Cloud organization, you can choose to log in to your personal account or to an organization by selecting an account profile from the list and tapping ‘choose’.

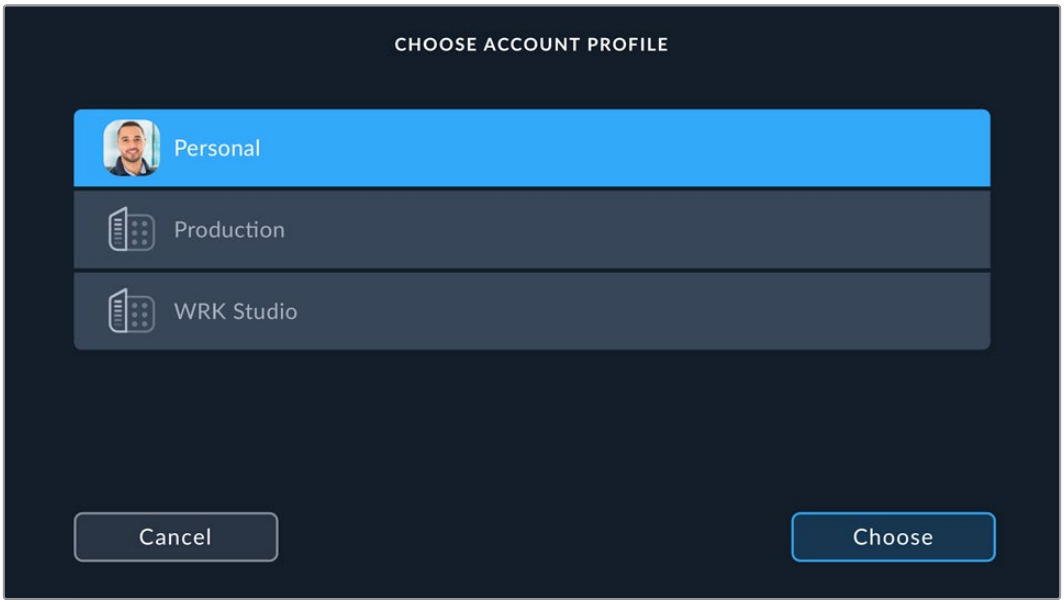

Once logged in, your Blackmagic Cloud avatar will be displayed in the controls menu. You can tap your avatar to switch accounts, log out and select cloud locations.

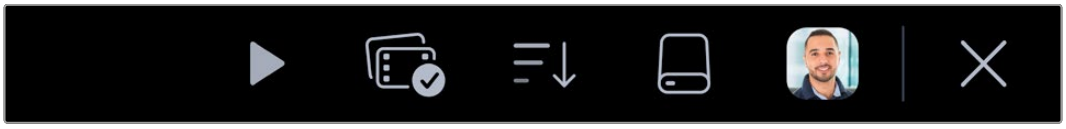

Your account avatar is displayed in the controls menu

Allowing Remote Camera Access in DaVinci Resolve

You can upload clips to both new and existing Blackmagic Cloud projects from your URSA Cine by allowing remote camera access in DaVinci Resolve’s settings. Once remote access has been enabled for a project, it will appear in your camera’s Blackmagic Cloud projects panel.

Allowing access to a new project:

1 Open DaVinci Resolve. In the ‘project manager’ window, select the ‘cloud’ tab and enter your Blackmagic Cloud login details.

2 Select a Blackmagic Cloud project library from the project library list and click ‘new project’.

3 With the new project window open, enter the project details. Enable ‘allow remote camera access’ in the new cloud project window.

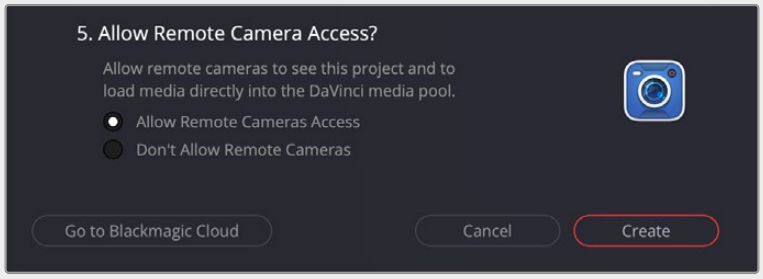

If you want to upload clips to an existing DaVinci Resolve Cloud project, open the project settings and select ‘Blackmagic Cloud’. Enable the ‘allow remote cameras to see this project to load media directly into the media pool’ option in the ‘remote cameras’ settings.

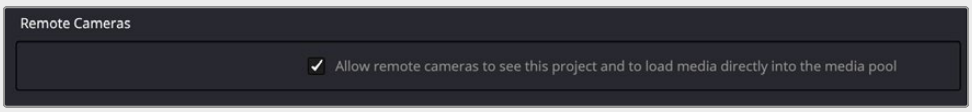

The Blackmagic Cloud project will appear in your Blackmagic URSA Cine’s media pool sidebar when your camera is connected to the internet and signed into your Blackmagic Cloud account.

For more information about DaVinci Resolve Cloud projects, refer to the DaVinci Resolve user manual. You can download the manual at www.blackmagicdesign.com/support/family/davinci-resolve-and-fusion

Setting Cloud Locations

You can choose the DaVinci Resolve Cloud projects and shared folders that your camera will be able to record and upload clips to by selecting them from the ‘cloud locations’ menu.

To set the available cloud locations:

1 Tap on your avatar in the controls menu and tap ‘cloud locations’.

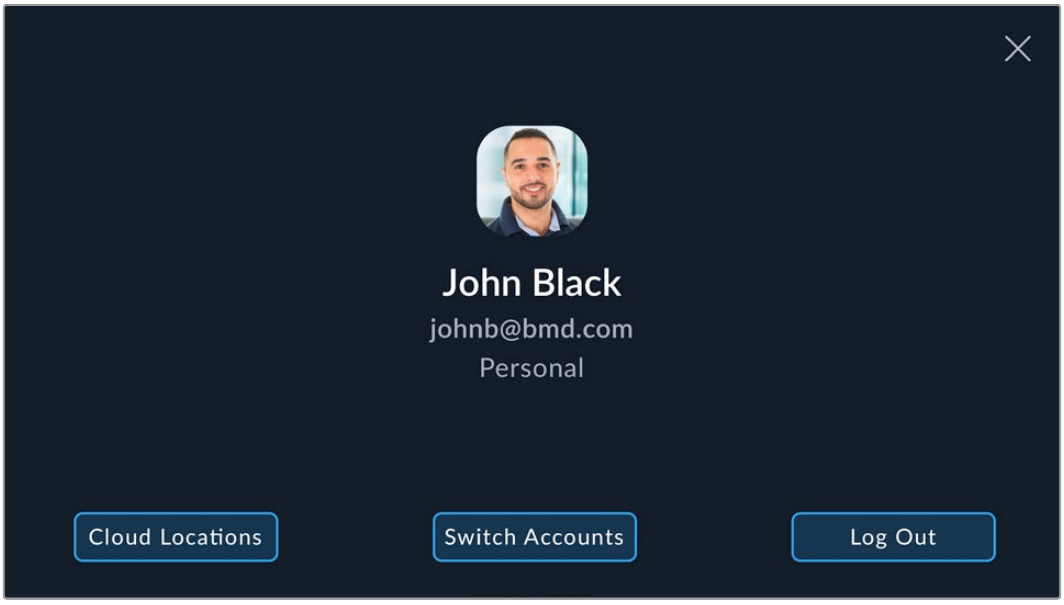

2 Select an available cloud location from the list and tap ‘choose location’.

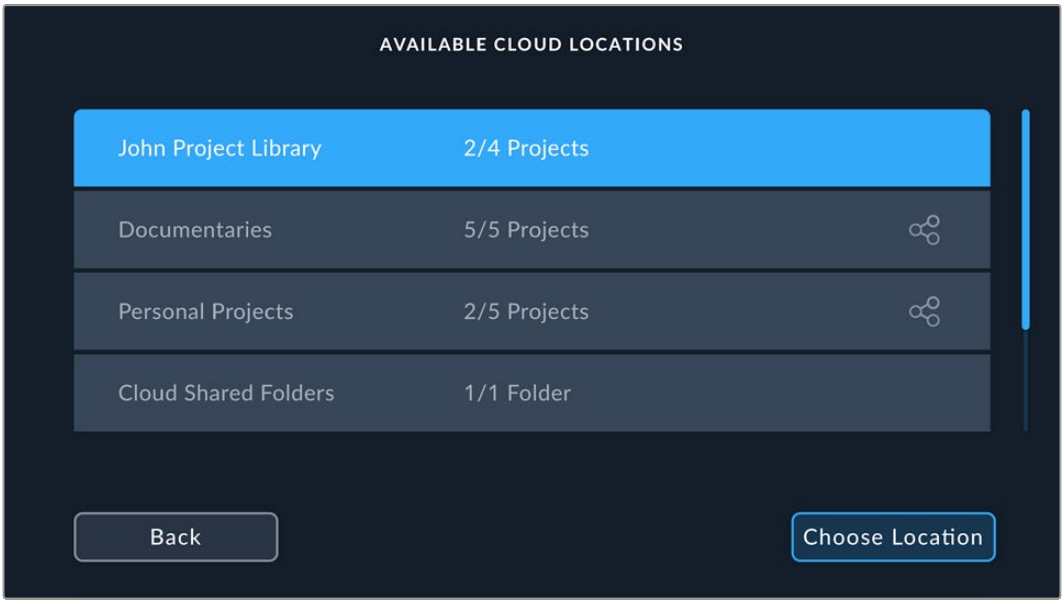

3 In the project library list, tap the ‘eye’ icon next to a project to show or hide it. To hide all the projects in a library, tap ‘hide all’. Once you’ve selected your projects, tap the ‘back’ button.



Blackmagic Cloud Projects Panel

Tap the sidebar icon at the top left of the touchscreen to open the Blackmagic Cloud projects panel.

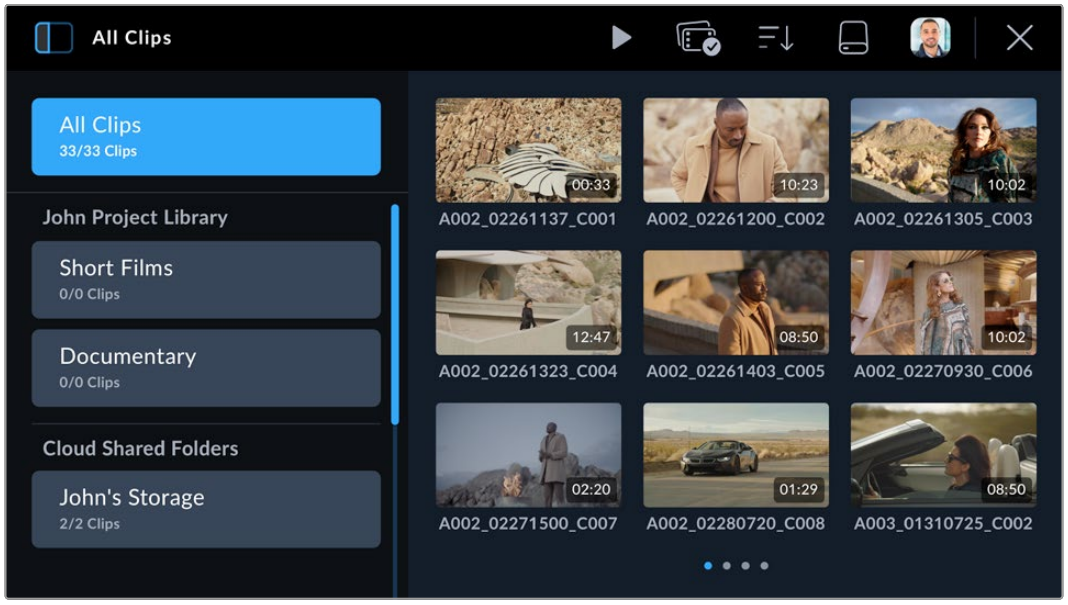

When you are signed into your Blackmagic Cloud account, projects that you can upload clips to are listed in the 'Blackmagic Cloud' section of the viewer.

Uploading Clips to a Blackmagic Cloud Project

Selecting a Blackmagic Cloud project lets you upload proxy files, or both proxies and originals, as you record clips to your camera's media. When a project is selected in the projects panel, a clip will be immediately uploaded as soon as you stop recording on your camera. This will happen in the background as you continue recording clips for as long as your camera is connected to the Internet and logged into your Blackmagic Cloud account.

To upload to a Blackmagic Cloud project:

1 Tap on a Blackmagic Cloud Project to select it.

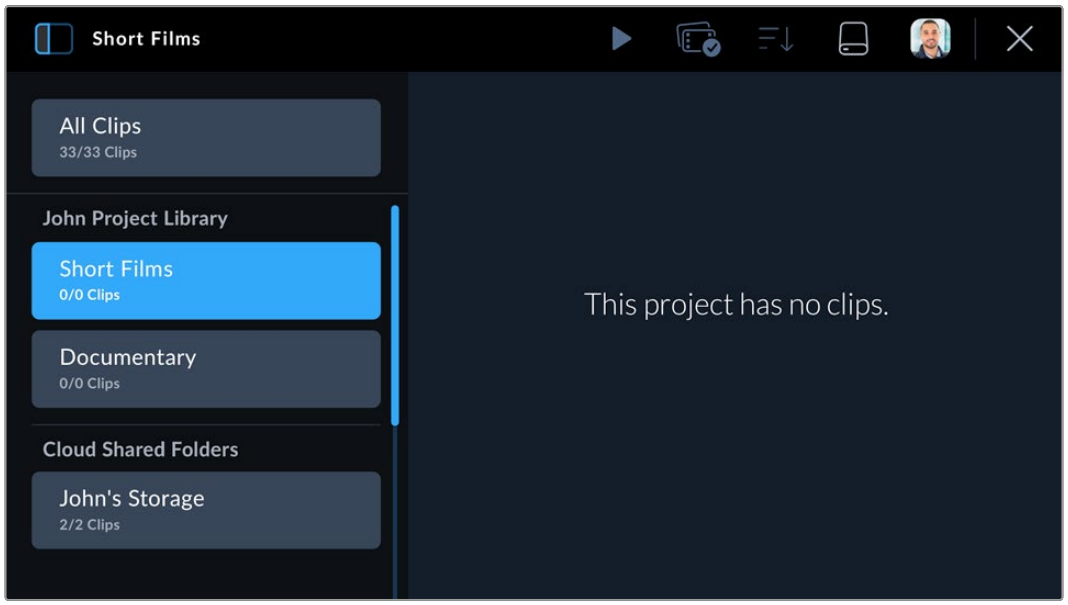

2 Tap the ‘x’ at the top right of your camera’s touchscreen or press the camera’s ‘record’ button to close the media pool and return to the HUD.

3 The name of the selected Blackmagic Cloud project will appear above the timecode display on your camera’s HUD. The next time you record a clip, your camera will automatically start uploading media to the selected cloud project.

If your camera’s internet connection is interrupted, the name of the cloud project will be grayed out and uploads paused. Your camera will automatically restart the uploading process when the internet connection is restored.



When you have finished recording, tap on your camera’s storage indicator to open the media pool and view the upload status of your clips.

Your Blackmagic Cloud avatar will remain visible in the controls menu and you will stay logged in even if you have disconnected your phone or removed the Ethernet connection. This ensures that any recordings you have in your project upload queue will resume as soon as possible after plugging in your phone or network again. Your camera will immediately try to reestablish your internet connection and resume any uploads it has in its queue.

This also means when you choose to record directly into a project, you can operate in areas with patchy cellular coverage and not worry about reconnecting to upload as the process happens automatically. For example, you could record clips in locations where there is no Internet connection or cellular signal at all and then simply plug in when you are in range or have a wired Internet connection and quickly upload your proxies then.

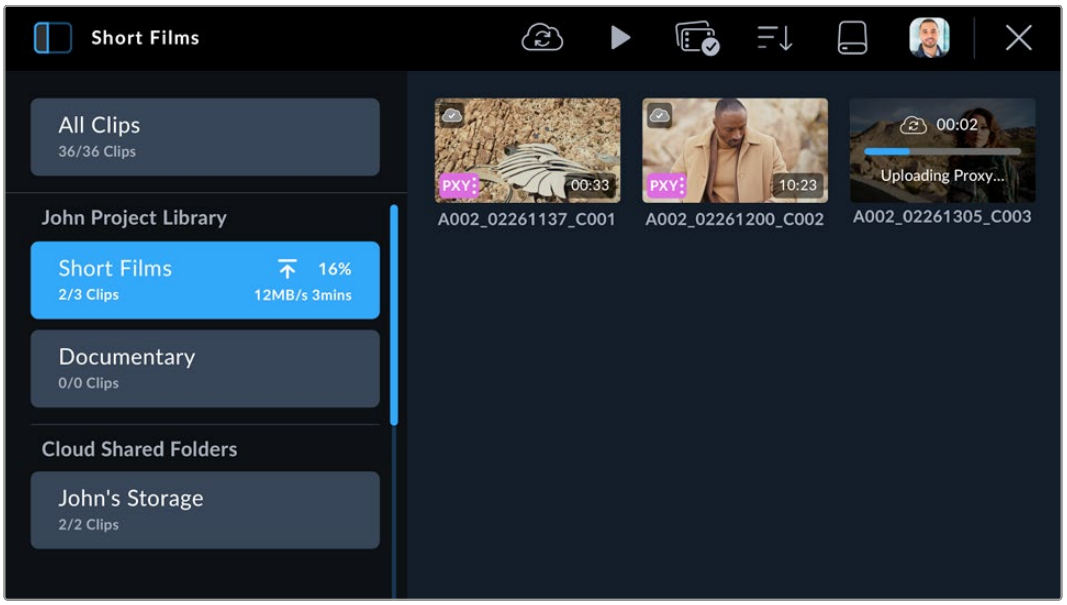

TIP For information on how to set your camera to upload proxy files or both proxy and original files, refer to the ‘settings’ section.

Selectively Uploading Clips to Projects

If you prefer, you can choose not to upload to a project until after your shoot and then upload a single clip to a project, more than one project, or even your private storage all at once. You can also use the group select tool to select multiple clips to upload at once to one or many locations.

To upload recorded clips to a Blackmagic Cloud project:

1 Log in to your Blackmagic Cloud account.

2 Tap the sidebar icon and select ‘all clips’.

3 Tap the ‘group select’ icon in the controls menu and select the clips that you want to upload.

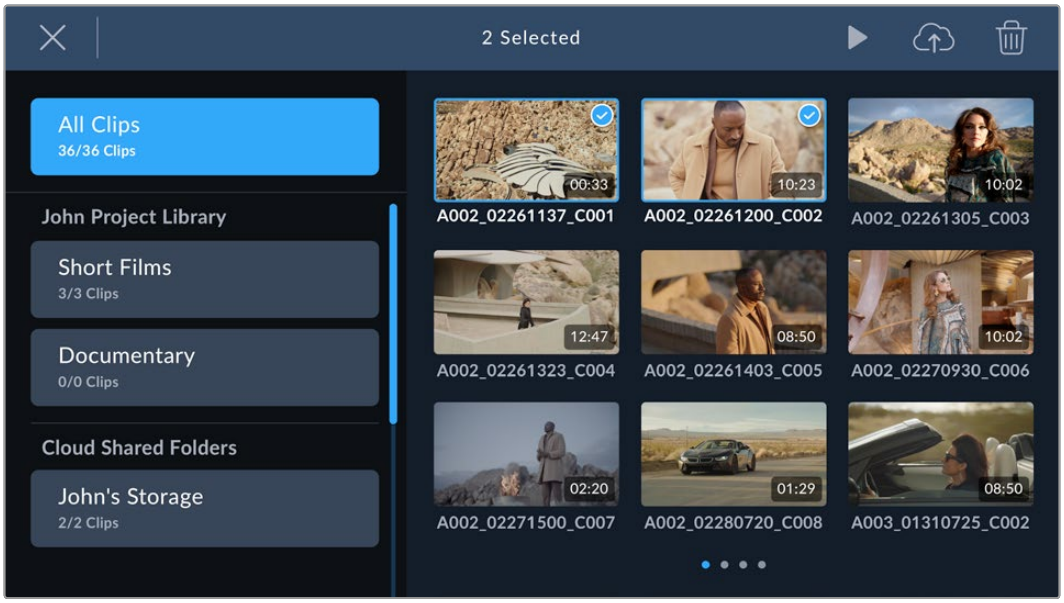

4 Tap the ‘cloud upload’ icon. Select the Blackmagic Cloud projects that you want to upload your clips to by tapping the project names.

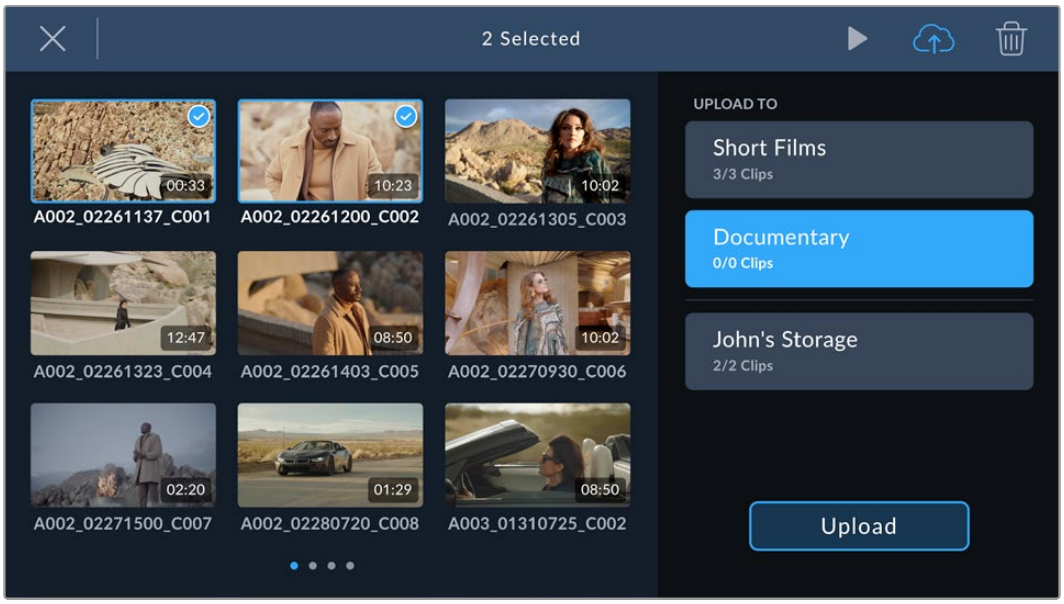

5 Tap ‘upload’.

Upload Original

When uploading clips to Blackmagic Cloud projects with ‘proxies only’ selected in your camera’s ‘setup’ settings, you can still choose to upload an original clip using the clip’s metadata viewer. For example, this can be helpful when you are shooting at high resolutions using Blackmagic RAW with low compression as the files can get very large. To save cellular upload data you may choose to upload proxies only and then upload specific original clips later as required.

To upload an original clip:

1 Select the Blackmagic Cloud project from the projects panel and tap the clip to open it in the playback viewer.

2 Tap the ‘information’ icon in the controls menu to display the clip’s metadata.

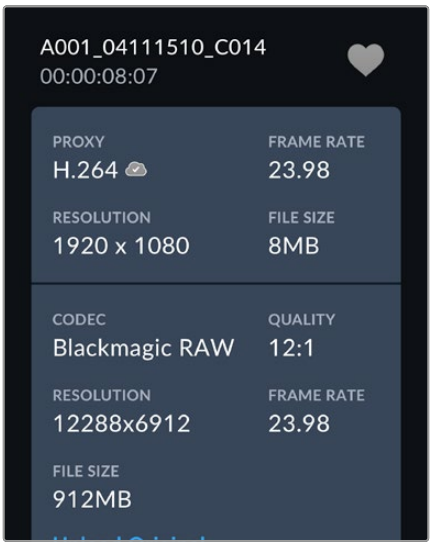

3 In the metadata window, scroll to the section that displays metadata information for your clip’s original file. Tap the ‘upload original’ button.

Uploading to your Blackmagic Cloud Storage

You can also choose to upload clips directly to your own private Blackmagic Cloud storage. This can be useful if you want to upload and back up clips but not into a specific DaVinci Resolve project. Access your cloud storage by logging into your Blackmagic Cloud account on your computer and selecting ‘cloud storage’ from the menu.

To upload clips to your Blackmagic Cloud storage:

1 Tap the sidebar icon at the top left of the Blackmagic Cloud project panel.

2 Scroll to the bottom of the project list and select your cloud storage, this will be named with your Blackmagic Cloud user name, followed by ‘storage’.

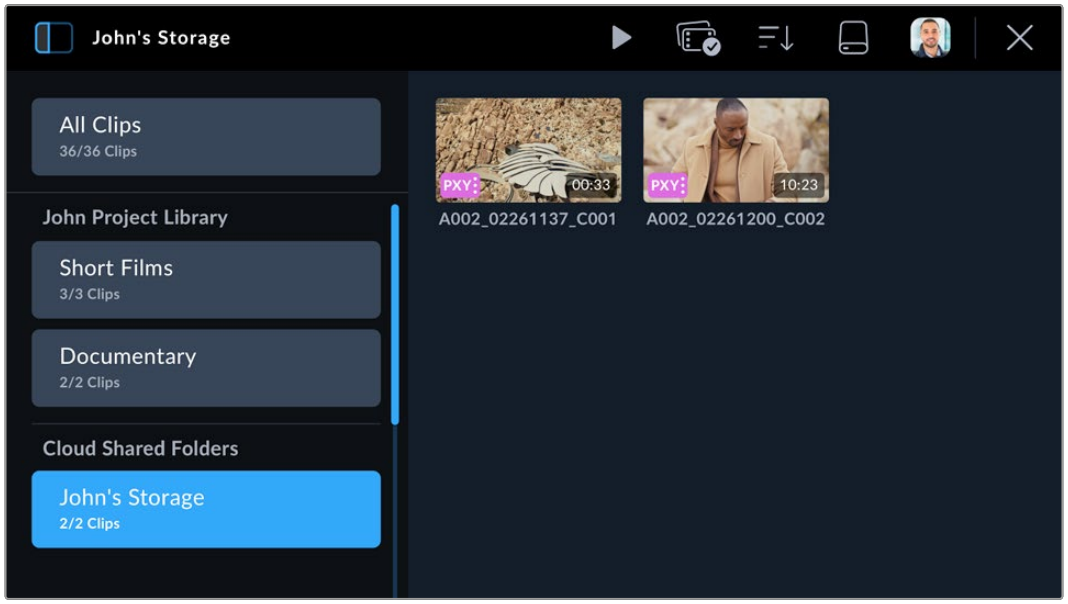

3 Tap your private Blackmagic Cloud storage to select it.

Clip Upload Status Indicators

When you have chosen to upload clips to a Blackmagic Cloud project, you can check the upload status by selecting the project from the Blackmagic Cloud projects panel.

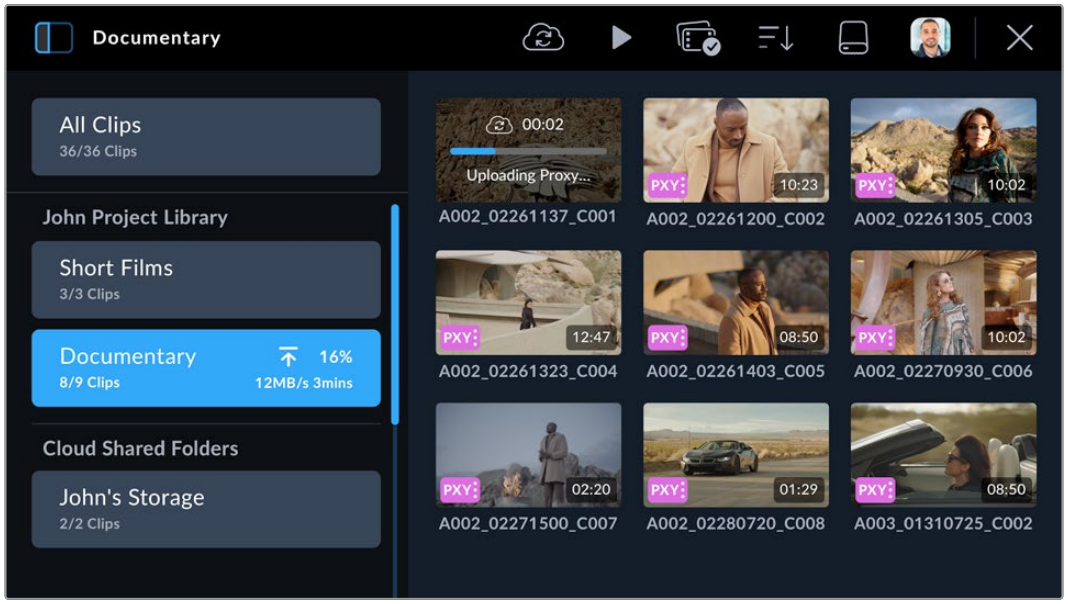

Next to the cloud project name the overall upload status is displayed including number of clips, completed percentage, upload speed and estimated time remaining.

The upload status for each clip is displayed on the clip thumbnail:

PXY	Displayed when the clip's proxy file has been successfully uploaded.
PXY HQ	Displayed when both the proxy and original files have been uploaded.

Closing the Media Pool

When you have finished using the medial pool and want to return to the live recording view on your camera's LCD, tap the 'X' icon at the top right corner of the menu controls.

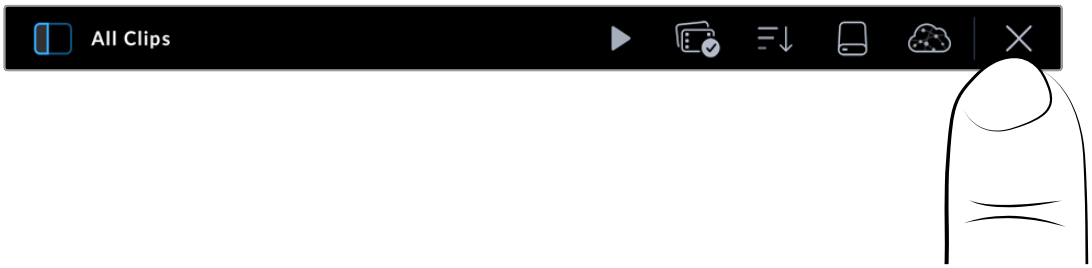

Blackmagic Media Module

Blackmagic Media Module 8TB and 16TB are self contained modular storage units with 8 and 16 Terabytes of storage space. The module is similar to a Blackmagic Cloud Store and is a fast, easy to use removable storage solution that enables recording at the highest resolutions and high frame rates. Blackmagic Media Module 8TB is supplied with URSA Cine kits already loaded in your camera's module bay and formatted so you can start recording straight away.

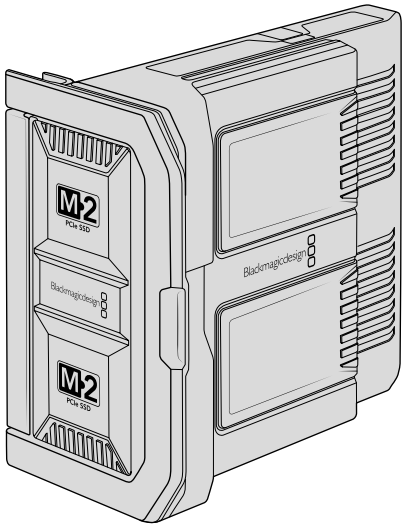

Blackmagic Media Module 8TB

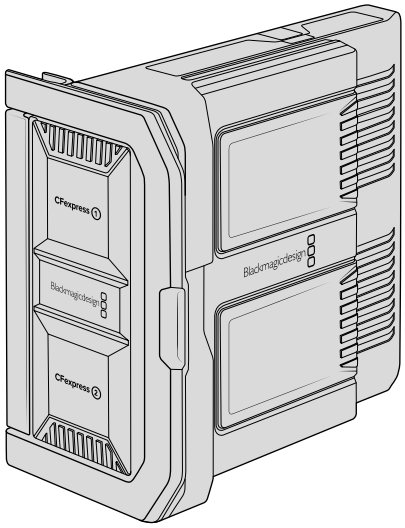

Blackmagic Media Module CFexpress

Blackmagic Media Module CFexpress is an optional module without internal memory and instead has CFexpress card slots built in. This lets you shoot using the same CFexpress cards you use in your Blackmagic Cinema Camera 6K or Blackmagic PYXIS 6K.

Blackmagic Media Modules are designed to be easily loaded and unloaded if you want to swap to an empty module or load the module into an optional Blackmagic Media Dock for post production.

Recording duration times based on media capacity, frame rates and codec settings can be estimated using the data rate calculator at https://www.blackmagicdesign.com/products/blackmagicursacine#data-rate-calculator

Transferring Clips to Edit Storage

There are a number of ways you can transfer clips from your camera's storage to edit storage. For example, you can plug your camera directly into your computer via USB. You can also plug URSA Cine into your computer or a network via Ethernet and copy clips from your camera's storage over Ethernet. You can even unload the media module and load it into a Blackmagic Media Dock connected to your network or computer, which lets you work with up to 3 media modules simultaneously. When connecting to your computer over Ethernet, your computer will recognize the Blackmagic Media Module just like it would when plugging in a Blackmagic Cloud Store.

Your camera is set to use DHCP by default, so your computer or network will see the camera and assign an IP address automatically.

Enabling File Sharing

When you are setting your camera up for the first time and have connected to your computer or network via Ethernet, SMB file sharing will be disabled by default. This is because unlike a Blackmagic Cloud Store where you will likely want to share files with other users on the network straight away, you may not want to immediately allow the same level of access to the master camera files after an important day's shoot. For this reason, we decided to let you enable SMB file sharing yourself.

To enable file sharing, you will need to download and install Blackmagic Camera Setup on your computer. This setup utility is an administration software application that lets you update your camera and change admin settings. You can download Blackmagic Camera Setup from our website at: https://www.blackmagicdesign.com/support/family/professional-cameras

After downloading and installing the setup utility, connect your camera to the computer via USB and launch Blackmagic Camera Setup. Connect via the top panel USB port towards the rear of your camera.

To open the settings, click on the image of your URSA Cine or its settings icon.

1 Scroll down to the 'network access' settings and enable 'file sharing (SMB)'.



2 Now go to the URL setting underneath and click on the URL icon to automatically populate the address. The URL address will display your camera's name as a local network location.

3 Click save.

To go straight to your clips, click on your camera's URL name. A window will open asking you to for a password or connect as a guest. Click on the 'guest' radio button and click 'connect'.

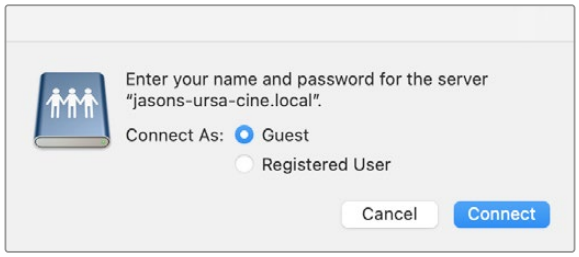

Your computer will now automatically navigate to your media module in Finder on a Mac and Windows Explorer in Windows. The utility will remember your Ethernet setup so you only need to do this once when setting up for the first time and then the next time you plug in your camera via Ethernet, you will be able to access the media module straight away without touching any of these settings.

For information on Blackmagic Camera Setup and what all the settings are for, go to the 'Blackmagic Camera Setup' section in this manual.

Unloading Blackmagic Media Module

The Blackmagic Media Module is designed to be quickly loaded and unloaded when you need to transfer clips to external storage or to swap to an empty module so you can keep recording.

To unload the Blackmagic Media Module:

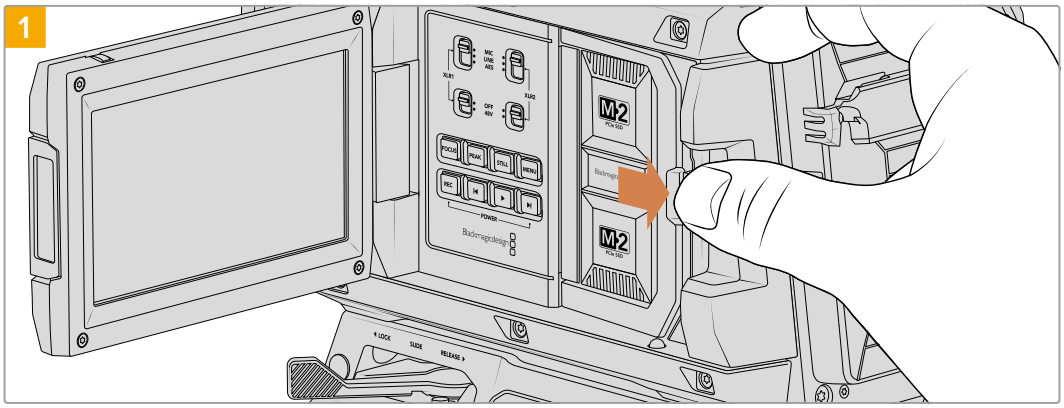

First make sure your camera has stopped recording. Slide the module release latch marked with an arrow towards the rear of the camera. The spring loaded media module will eject a small distance, allowing you to access the module's handle.

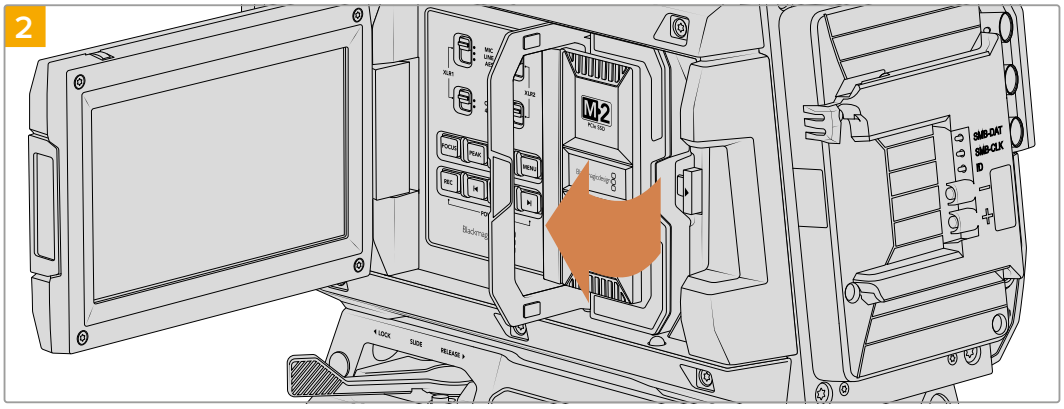

Gently swing open the media module's handle.

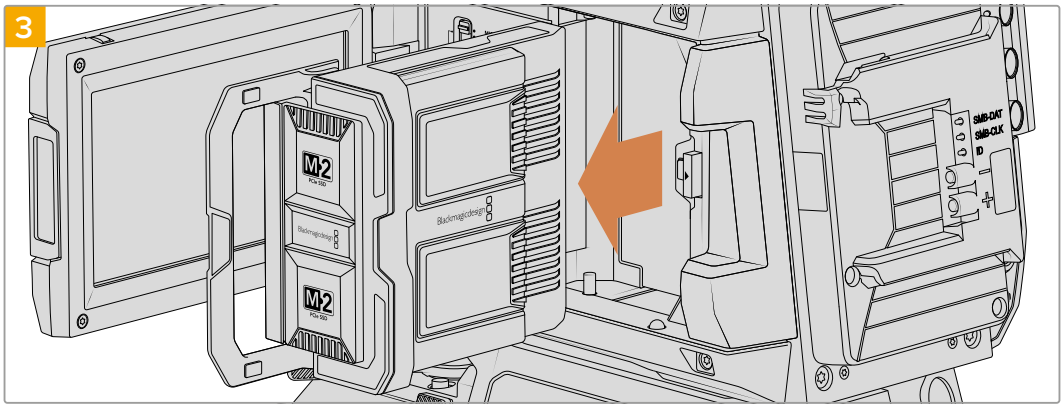

With the handle completely open, the module will be released from the camera's terminal and you can now remove the module from the module bay.

NOTE When unloading a media module, it's important to always check the camera is not recording.

Loading Blackmagic Media Module

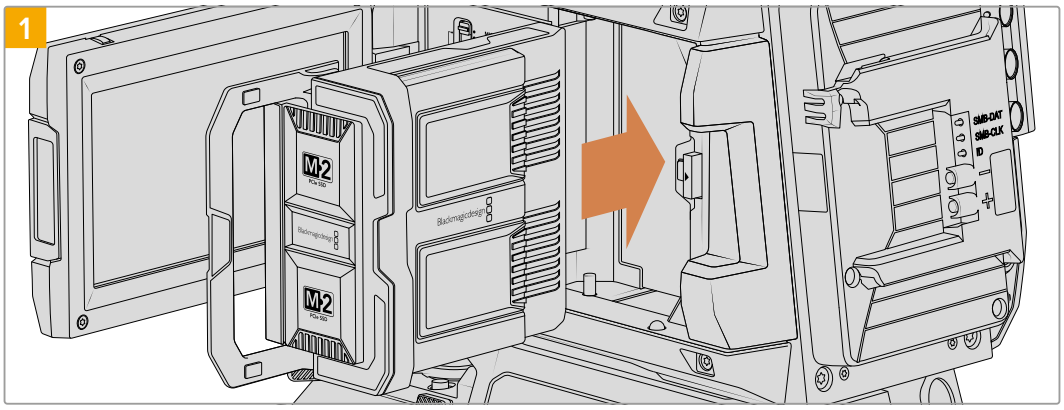

Align the Blackmagic Media Module with the camera's module bay.

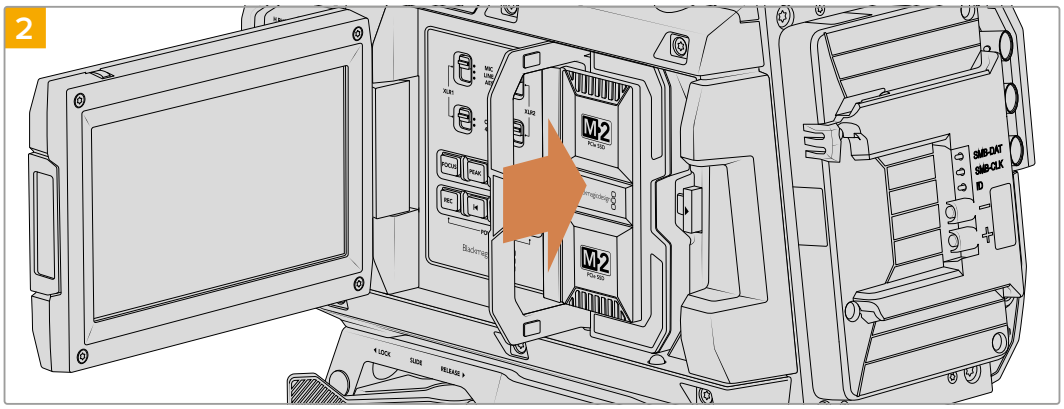

Slide the module into the bay until it touches the inner terminal.

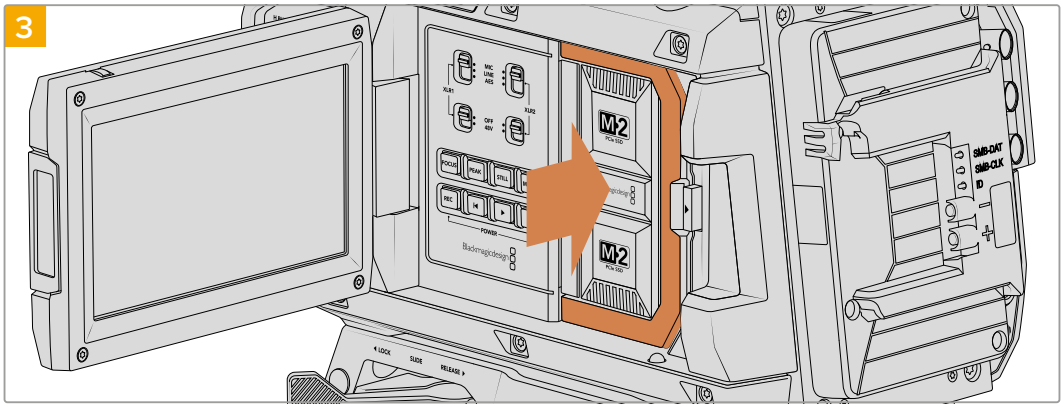

Swing the module's handle towards the camera then press the handle firmly into the camera body to mount it in place. You will hear the latch click when the module is fully mounted.

Preparing Media for Recording

Format your Media Module using Blackmagic URSA Cine's storage manager.

To format:

1 Tap the storage indicator at the bottom of the LCD touchscreen to open the media pool, then tap the media storage icon at the top of the touchscreen to enter the storage manager.



2 Tap the 'format' button at the bottom of the touchscreen.

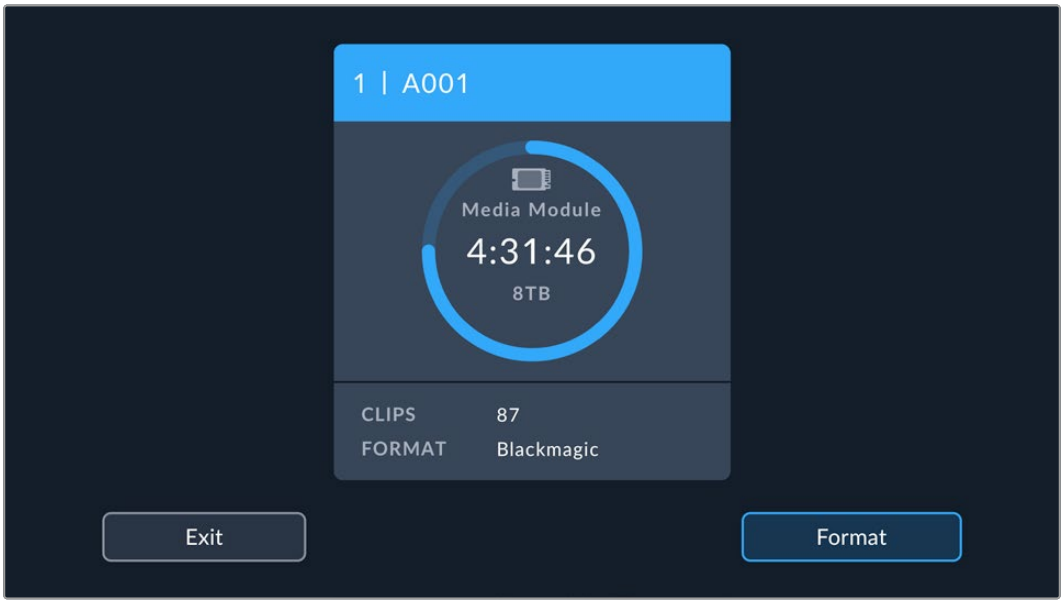

3 If you want to change the reel number, tap on the pencil icon to open the keyboard. Type the new reel number and tap 'update'.

NOTE For CFexpress cards, choose OS X Extended or exFAT format.

4 You will be asked to confirm your selection. Tap the format button again to continue or ‘cancel’ to cancel the format.

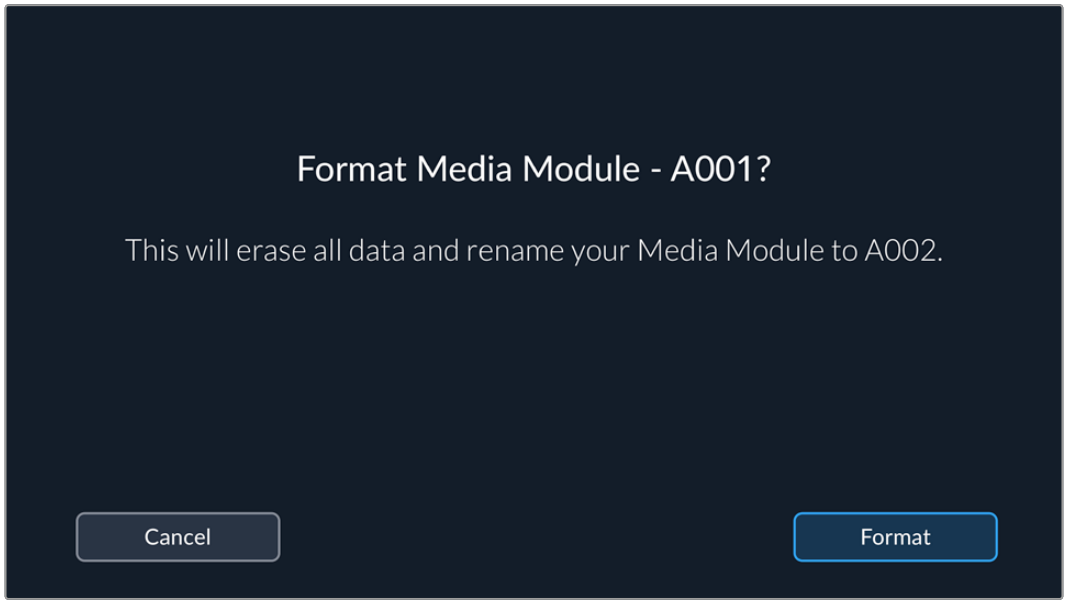

5 You will be prompted to press and hold the ‘format’ button for 3 seconds. The camera will notify you once formatting is complete.

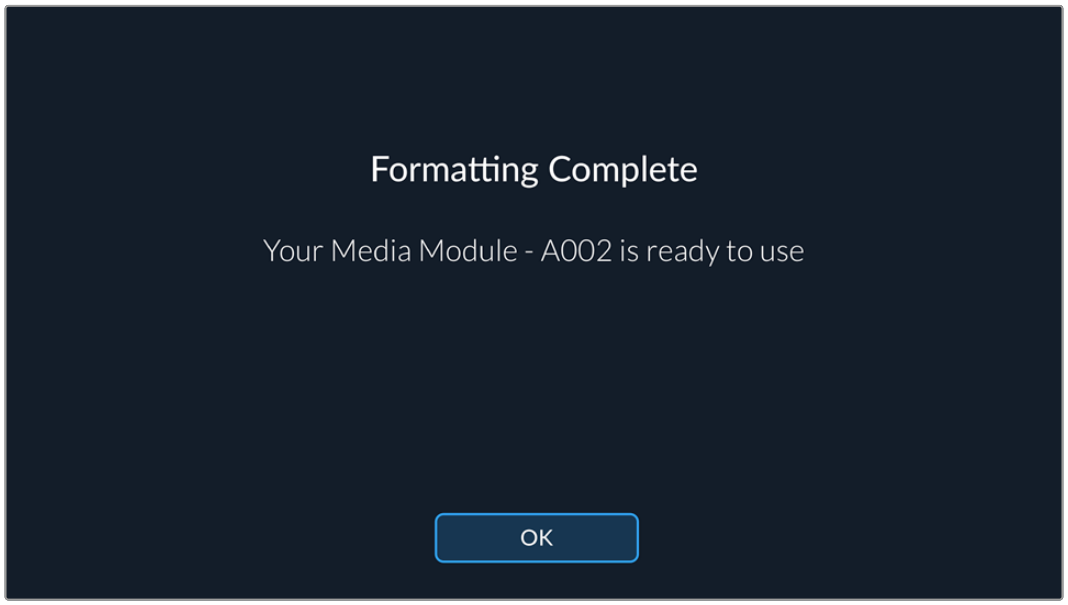

6 Tap ‘ok’ to return to the storage manager and ‘exit’ to return to the media pool.

When formatting recording media using the storage manager, your URSA Cine will use the Camera ID from the slate and reel number to name the card or media module. Your camera automatically increments reel numbers each time you format. If you need to manually enter a specific reel number, tap the ‘pencil icon’ and enter the number you want to format the module as.

When you start a new project, reel numbering will reset to 1 when you tap on ‘reset data’ in the ‘project’ tab of the slate.

Blackmagic Media Dock

After shooting clips, your media module can be unloaded from your URSA Cine and loaded into an optional Blackmagic Media Dock for editing, grading, file back up, and cloud sync. The module is loaded into a module bay in exactly the same way as loading and unloading to and from your camera.

Blackmagic Media Dock lets you share the data stored on Blackmagic Media Modules over your local or global network so editors can start editing straight away. You can transfer files to cloud storage or even use the modules themselves as removable edit storage.

Just like Blackmagic Cloud Store, the media dock handles many simultaneous users. With live sync, files can be distributed between multiple users locally or globally for very fast file access, even on lower cost Internet connections. Blackmagic Media Dock includes four 10G Ethernet connections that can be used as an Ethernet switch, which means the media dock can serve as your network backbone.

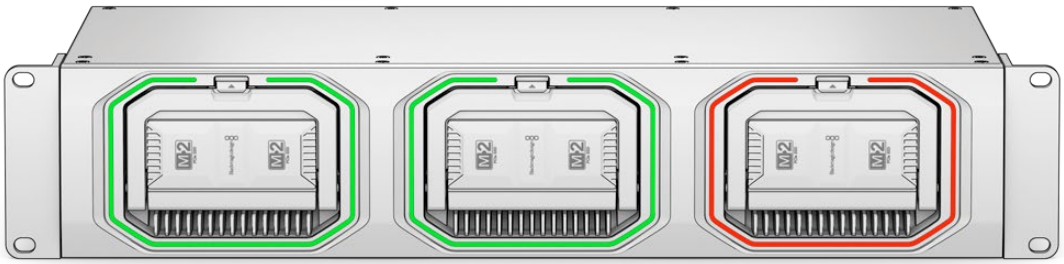

Connecting Power

Connect power to any of Blackmagic Media Dock's power inputs using a standard IEC power cable. A second power input is provided for redundancy.

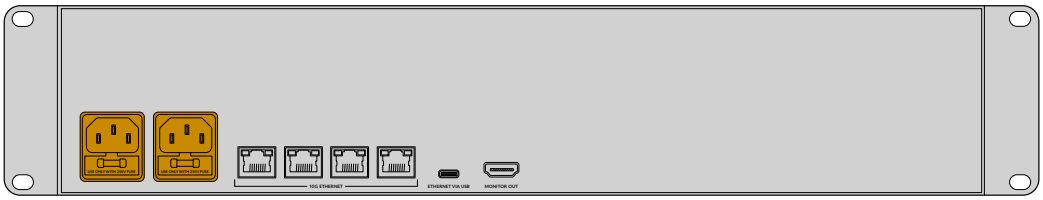

Connecting to your Network

After plugging in power, connect to your network or computer via Ethernet. We recommend using CAT 6A Class E or F network cables for longer cable runs. If you have a 1G Ethernet switch, a standard network cable is sufficient. Blackmagic Media Dock is set to use DHCP by default. This means the unit will be seen on your network and will be assigned an IP address automatically.

TIP If your computer does not have a 10G Ethernet port but has a Thunderbolt 3 port, you can connect your Blackmagic Media Dock using a Thunderbolt 3 to 10G Ethernet adapter. This means you will get faster transfer speeds than you would via a 1G Ethernet port.

NOTE To set a static IP address and configure your Blackmagic Media Dock, it's important to update your media dock to Blackmagic Cloud Store 1.3.1 or later.

Loading and Unloading Blackmagic Media Modules

Blackmagic Media Dock features three media module bays for reading and writing files on three modules simultaneously.

To load a module into a module bay:

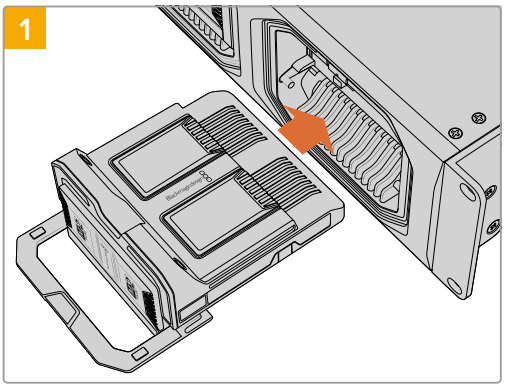

Align the media module with the module bay and gently push into the bay until you feel it rest against the terminal.

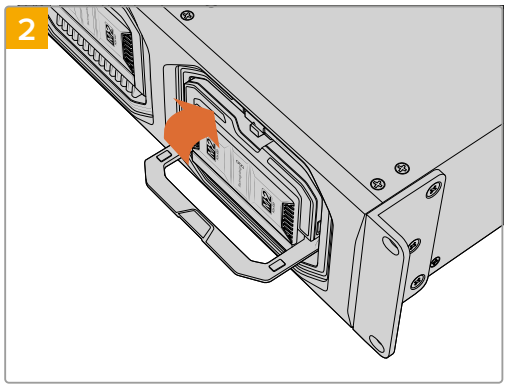

Swing the module's handle up to seat the module into the terminal.

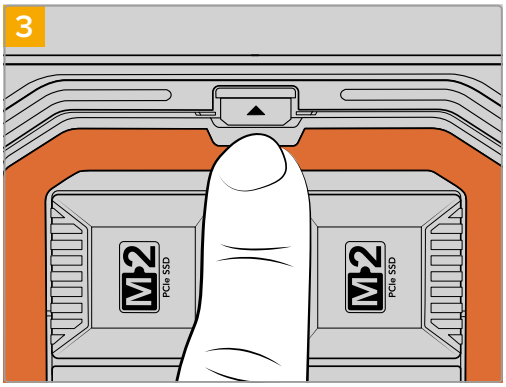

Press the top of the handle until the module release button clicks into place. This secures the module to the module bay.

Status LEDs

The LED strip surrounding each module and drive bay indicates the read and write status. The LED strip will illuminate green when reading files and red when files are being written.

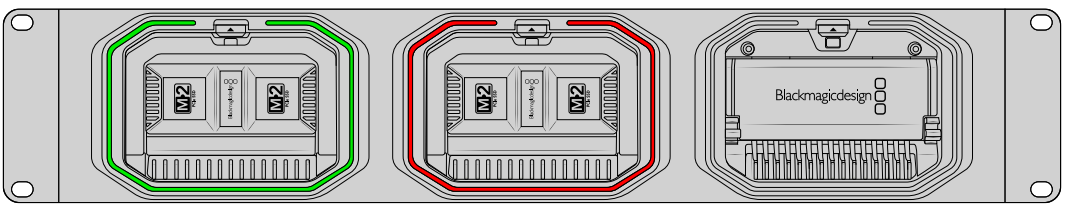

To remove a module:

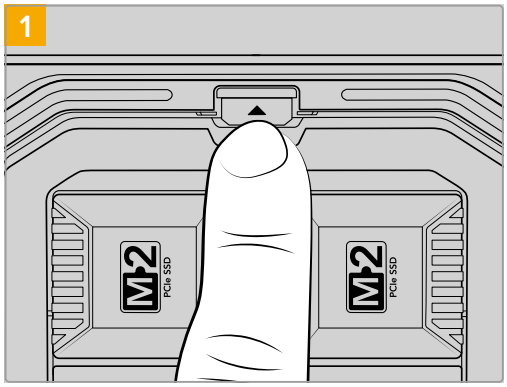

Press the module release button above the module bay.

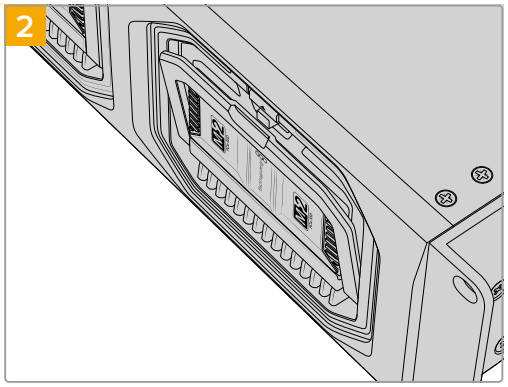

The module's handle will open slightly.

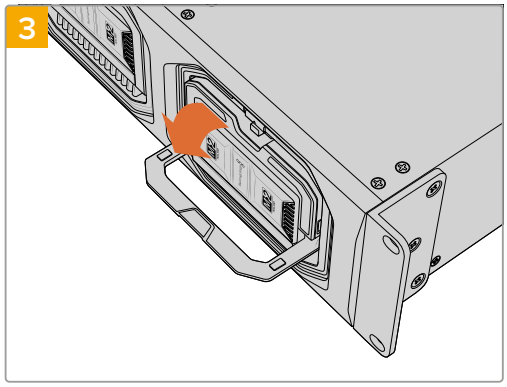

Swing the handle down to eject the module from the terminal.

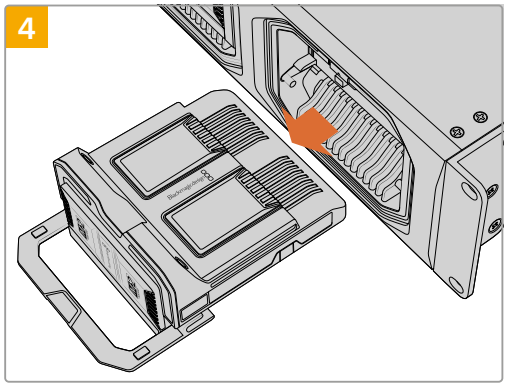

With the module released from the terminal, you can now remove the module from the module bay.

NOTE Before removing a module it is important to make sure the modules are not writing files. When your media dock is writing files on a module, the status LED surrounding the module bay will illuminate red. When reading files the LED illuminates green. Before removing a module, first check the media module status LED is not illuminated red.

After loading a Blackmagic Media Module, the module will appear in your computer's network locations and you can start editing straight away or copy files to other media locations. If you have already created syncs and back up locations using Blackmagic Cloud Store Setup, your media dock will automatically upload any new files to them. You can learn more about creating syncs and back ups in the Blackmagic Cloud Store manual at https://documents.blackmagicdesign.com/UserManuals/CloudStoreManual.pdf

Accessing Storage

To access Blackmagic Media Modules on a Mac computer:

1. Open Finder and click on 'network' in the sidebar menu.
2. Double click on your Blackmagic Media Dock in the list.
3. Now double click on a media module.

All loaded media modules are now accessible and the Blackmagic Media Dock is visible in the locations sidebar.

Windows 11 no longer allows ‘guest’ accounts that don’t require a username and password to connect to network storage. Before accessing your Blackmagic Media Module’s storage over a network, you will need to create a new user and set a password using Blackmagic Cloud Store setup. More information on setting up users and passwords is available in the Blackmagic Cloud Store Manual available on the Blackmagic Design website.

To access storage on a Windows computer:

1. Click on the ‘network’ menu item in File Explorer sidebar. You will see your Blackmagic Media Dock listed.
2. Double click on your media dock and a Windows security dialog box will appear asking for network credentials.
3. Set the username and password to ‘guest’.

NOTE If your computer fails to connect, your media dock may belong to a Windows workgroup. Use ‘workgroup\guest’ as your username and ‘guest’ as your password to log into your storage.

4. Click ‘OK’.

You will now see your media modules in the File Explorer window and can access them like any other network drive.

Alternatively, you can access your storage from the setup utility. On a Mac computer click the ‘show in Finder’ button. On a Windows computer this button is named ‘show in File Explorer’.

Blackmagic RAW

Your URSA Cine can record using Blackmagic RAW with constant quality or constant bitrate settings. Clips recorded using Blackmagic RAW are compatible with DaVinci Resolve, Blackmagic RAW Player and other applications that support the Blackmagic RAW SDK. Blackmagic RAW has already been adopted by many post production platforms. It may not be supported natively in all editing software but most work with the plugins provided in our camera update and Blackmagic RAW installer.

Blackmagic RAW offers superior image quality, wide dynamic range and a broad selection of compression ratios. Blackmagic RAW keeps all the benefits of RAW recording, but the files are very fast because part of the demosaic is performed in the camera where it can be hardware accelerated.

The Blackmagic RAW format is also intelligent because it understands the image sensor in the camera. This means you get much better quality for a smaller file format. Smaller files that are higher quality means Blackmagic RAW is a good alternative to other video and RAW file formats.

Blackmagic RAW also includes powerful metadata support so the software reading the files knows your camera settings. If you like shooting in video gamma because you need to turn around edits quickly and you don’t have time for color correction, then this metadata feature means you can select video gamma, shoot in video gamma, and the file will display with video gamma applied when you open it in software. However underneath, the file is actually film gamma and the metadata in the file is what’s telling the software to apply the video gamma.

So what all this means is if you want to color grade your images at some point, then you have all that film dynamic range preserved in the file. You don’t have your images hard clipped in the whites or the blacks, so you retain detail and you can color grade to make all your images look

cinematic. However, if you don't have time for color grading, that's fine because your images will have the video gamma applied and look like normal video camera images. You are not locked in on the shoot and you can change your mind later during post production.

Blackmagic RAW files are extremely fast and the codec is optimized for your computer's CPU and GPU. This means it has fast smooth playback and eliminates the need for hardware decoder boards, which is important for laptop use. Software that reads Blackmagic RAW also gets the advantage of processing via Apple Metal, Nvidia CUDA and OpenCL.

This means that Blackmagic RAW plays back at normal speed like a video file on most computers, without needing to cache it first or lower the resolution.

It's also worth mentioning that lens information is recorded in the metadata on a frame by frame basis. For example, when using compatible lenses, any zoom or focus changes performed over the length of a clip will be saved, frame by frame, to the metadata in the Blackmagic RAW file.

Recording to Blackmagic RAW

Blackmagic RAW works in two different ways. You have a choice to use either the constant bitrate codec, or the constant quality codec.

The constant bitrate codec works in a similar way to most codecs. It tries to keep the data rate at a consistent level and won't let the data rate go too high. This means even if you are shooting a complex image that might need a bit more data to store the image, a constant bitrate codec will just compress the image harder to make sure the images fit within the space allocated.

This can be fine for video codecs, however when shooting RAW you really want to ensure the quality is predictable. What would happen if the images you were shooting needed more data, but the codec just compresses harder to make a specified data rate? It's possible you could lose quality, but not be sure it's happening until you return from a shoot.

To solve this problem, Blackmagic RAW also has an alternative codec choice called constant quality. This codec is technically called a variable bitrate codec, but what it's really doing is allowing the size of the file to grow if your images need extra data. There is no upper limit on the file size if you need to encode an image but maintain quality.

So Blackmagic RAW set to the constant quality setting will just let the file grow as big as it needs to be to encode your images. It also means the files could be larger or smaller depending on what you are shooting. I guess if you leave your lens cap on the lens, you won't waste space on your media!

It is also worth noting that the quality settings for Blackmagic RAW are not obscure names, but are more meaningful as they are derived from what's happening technically. So for example when you have selected the constant bitrate codec, you will see quality settings such as 3:1, 4:1 and more. These are the ratios of the uncompressed RAW file size vs the file sizes you should expect when shooting in Blackmagic RAW. 3:1 is better quality as the file is larger, while 18:1 is the smallest file size with the lowest quality. Many users of Blackmagic RAW find that 12:1 or 18:1 has been perfectly ok and they have not seen any quality limitations. However it's best to experiment and try various settings for yourself.

When using Blackmagic RAW in constant quality you will see the settings are Q0, Q1, Q3 or Q5. These are the compression parameters passed to the codec and they are setting how much compression is applied in a more technical way. This setting is different because the codec operates differently between constant bitrate vs constant quality. In this constant quality setting, you really cannot tell what the file size ratio will become as it varies a lot based on what you are shooting. So in this case the setting is different and the file will become the size needed to store your media.

Constant Bitrate Settings

The names such as 3:1 and 18:1 represent the compression ratio. For example, 12:1 compression produces a file size roughly 12 times smaller than uncompressed RAW. Depending on which sensor aspect ratio you choose to shoot with, the Blackmagic RAW constant bitrate will be available from 3:1 to 18:1.

Constant Quality Settings

Q0, Q1, Q3 and Q5 refer to different levels of quantization. Q5 has a greater level of quantization but offers a greatly improved data rate. As mentioned above, the constant quality setting can result in files that grow and shrink quite a lot, depending on what you are shooting. This also means it's possible to shoot something and see the file size increase to beyond what your media card can keep up with. It could result in dropped frames. However the benefit is that you can instantly see if this happens on a shoot and then investigate your settings vs quality.

Blackmagic RAW constant quality is available at Q0, Q1, Q3 and Q5.

Blackmagic RAW Player

The Blackmagic RAW player included in your Blackmagic camera's software installer is a streamlined application for reviewing clips. Simply double click on a Blackmagic RAW file to open it, and you can quickly play and scroll through the file with its full resolution and bit depth.

When decoding frames, the CPU acceleration in the SDK library supports all main architectures, and also supports GPU acceleration via Apple Metal, Nvidia CUDA and OpenCL. It also works with the Blackmagic eGPU for extra performance. Blackmagic RAW player is available for Mac, Windows and Linux.

Sidecar Files

Blackmagic RAW sidecar files let you override metadata in a file without overwriting embedded metadata in the original file. This metadata includes the RAW settings as well as information on iris, focus, focal length, while balance, tint, color space, project name, take number and more. Metadata is encoded frame by frame over the duration of the clip, which is important for lens data if the lens is adjusted during a shot. You can add or edit metadata in sidecar files with DaVinci Resolve or even a text editor because it's a human readable format.

Sidecar files can be used to automatically add new RAW settings to a playback simply by moving the sidecar file into the same folder as the corresponding RAW file. If you move the sidecar file out of the folder and reopen the Blackmagic RAW file, the RAW settings are not applied and you see the file as it was originally shot. Any software that uses the Blackmagic RAW SDK can access these settings. Changes made are saved in the sidecar file and can then be seen by Blackmagic RAW Player or any other software capable of reading Blackmagic RAW files.

When shooting video gamma, the file stays in film gamma, and the metadata tells the Blackmagic RAW processing to display using video gamma. Video gamma is great when you don't want to grade the image and want to deliver content quickly, however if you want to pull up the black parts of the image, or pull down the white areas, all the detail is retained. You never clip the video and all the detail is still there if you want to access it at any time.

Blackmagic RAW in DaVinci Resolve

Settings can be adjusted for each Blackmagic RAW file, and then saved as a new sidecar file from the RAW tab in DaVinci Resolve for creative effect or optimized viewing. This also means you can copy your media for another DaVinci Resolve artist and they will have access to your modified gamma settings automatically on import. In addition to the other metadata your camera files contain, DaVinci Resolve can read your selected dynamic range, so your clips will automatically display in DaVinci Resolve with 'film', 'extended video' or 'video' dynamic range.

You can then customize these settings by adjusting the saturation, contrast and midpoint, as well as the highlight and shadow rolloff. Any adjustments can then be saved as a sidecar file, so the changes can be seen by anyone else working with the files in post. You can always return to the original camera metadata at any time.

You can also export a single Blackmagic RAW frame from the RAW tab in DaVinci Resolve, which contains all adjustments, metadata, full resolution and color information so it is easy to share a single frame grab or reference file with others.

For more information on how to use Blackmagic RAW in DaVinci Resolve, see the 'Using DaVinci Resolve' chapter in this manual.

Blackmagic RAW Software Development Kit

The Blackmagic RAW Software Development Kit is an API developed by Blackmagic Design. You can use the Blackmagic RAW SDK to write your own applications to use the Blackmagic RAW format. This SDK library can be used by any developer to add support for reading, editing, and saving Blackmagic RAW files. The Blackmagic RAW SDK includes all the generation 4 and generation 5 color science so you can achieve organic cinematic images across any app that supports it. The Blackmagic RAW SDK supports Mac, Windows and Linux, and is available as a free download from the developer page of the Blackmagic website at www.blackmagicdesign.com/developer

The following diagram illustrates the components of the Blackmagic RAW API:

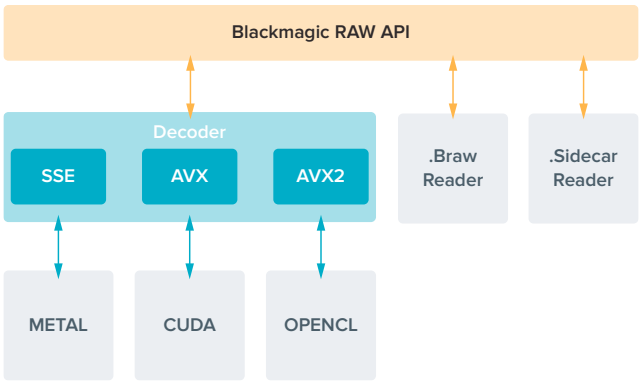

Working with Color Profiles

The Blackmagic RAW SDK allows direct decoding into a variety of color spaces. This includes both Blackmagic Design's own camera color spaces and third party spaces such as ARRI LogC3 and LogC4. For productions mixing cameras and workflows designed around other color spaces, this can help speed up integrating Blackmagic RAW files as well as being more processing efficient since extra color space conversions aren't necessary. Using the 'camera RAW' project settings in DaVinci Resolve, it is possible to override all Blackmagic Camera clips to decode to the color space of your choice. Simply set the camera RAW 'color space' setting to the profile you want. This can also be performed on a clip by clip basis by selecting 'clip' in the camera RAW 'decode using' menu, then assigning your desired profile in the 'color space' menu.

Blackmagic URSA Cine EVF

Blackmagic URSA Cine EVF is a powerful electronic viewfinder designed for your URSA Cine. The color OLED display and precision glass optics provides a bright, vivid, and lifelike image so you can quickly find focus and see the finest detail in your images.

This EVF is perfect for handheld operation on the shoulder, or for environments where you need absolute precision with zero reflection and light glare, for example in extremely bright shooting conditions.

The viewfinder is connected and powered via USB. Your camera's 'monitor' page 'EVF' settings let you customise the overlays on the EVF output or remove them entirely by selecting 'clean feed'.

Blackmagic URSA Cine EVF's modular design lets you easily reposition, or even remove and attach to accessories, for example the URSA Cine EVF Extension Arm.

Assembling and Attaching the EVF

If you have purchased the URSA Cine 12K Standard kit with EVF, URSA Cine EVF is packed inside your camera case in two parts. The EVF eyepiece is stored towards the front left of the case and the factory assembled EVF arm with 15mm carbon fibre rods are stored behind it. When purchasing URSA Cine EVF separately, the EVF arm requires some assembly prior to attaching to the camera.

This section of the manual includes:

- Assembling the URSA Cine EVF mounting mechanism.
- Attaching the eyepiece to URSA Cine EVF Rotating Bracket.
- Connecting URSA Cine EVF to your camera.
- Positioning URSA Cine EVF.
- Attaching URSA Cine EVF Extension.

Assembling the URSA Cine EVF Mounting Mechanism

The URSA Cine EVF arm consists of:

1. Blackmagic URSA Cine EVF Rotating Bracket
2. Blackmagic URSA Cine EVF Bracket Rod Mount
3. Two short 15mm carbon fibre rods.

NOTE If you have purchased the URSA Cine 12K LF Standard kit with EVF, you can skip this section and move to the 'attaching the eyepiece to URSA Cine EVF Rotating Bracket' section.

The first step to assembling the URSA Cine EVF Rotating Bracket is to attach the two 15mm rods to URSA Cine EVF Bracket Rod Mount.

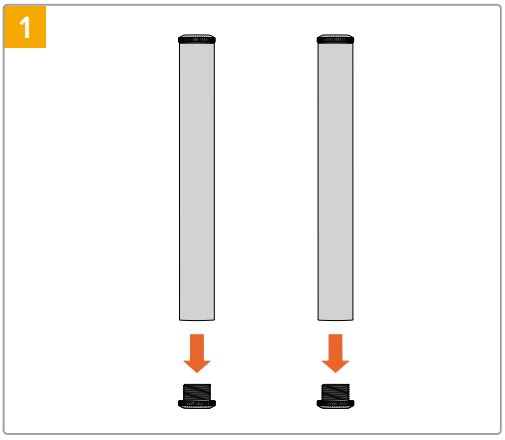

Unscrew the metal plugs from one end of each rod and keep them somewhere safe as you will need to screw them back on shortly.

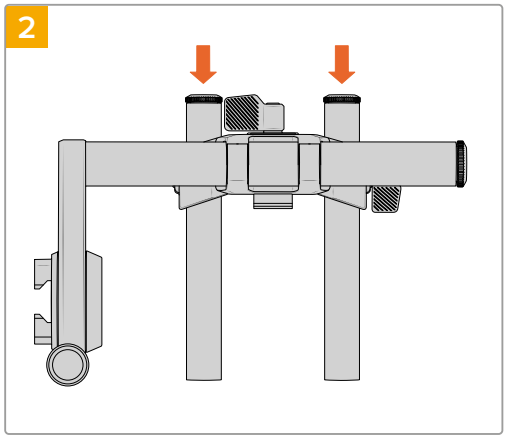

Rotate URSA Cine EVF Bracket Rod Mount's thumbscrews counter clockwise to allow enough room for the rods to slide through their respective holes.

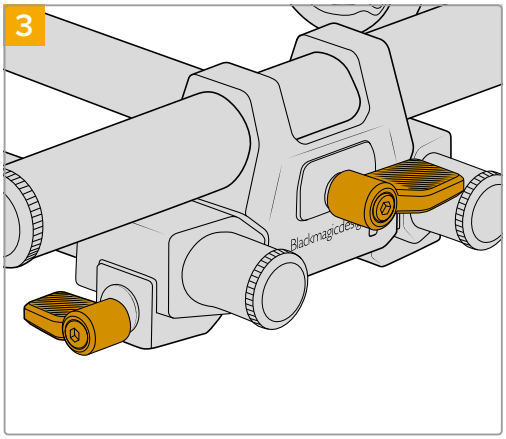

Tighten the thumbscrews to secure the rods.

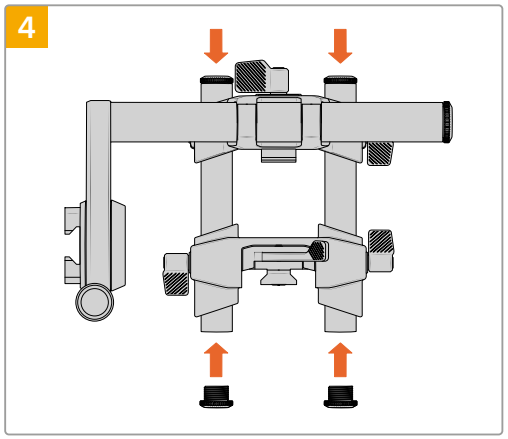

You will notice there is an adjustable top rod mount attached to the front of URSA Cine's top handle. Loosen the rod clamps on each side and insert the rods of the assembled EVF arm.

You can now screw the plugs back onto each rod and tighten the clamps. Avoid over tightening.

Attaching the Eyepiece to URSA Cine EVF Rotating Bracket

To attach the eyepiece:

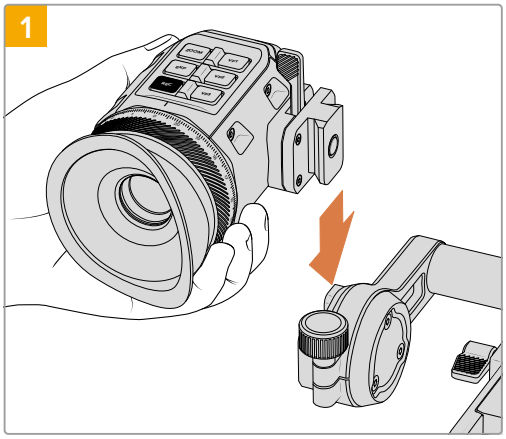

Slide the eyepiece into URSA Cine EVF Rotating Bracket's mini dovetail slot.

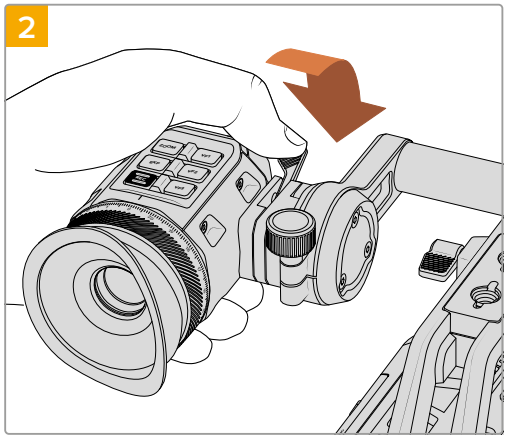

Once firmly seated, push the eyepiece's locking lever forward to secure URSA Cine EVF.

URSA Cine EVF is now fully assembled! The next step is to connect the eyepiece to your camera via USB.

Connecting URSA Cine EVF to your Camera

Connect your URSA Cine EVF to the 'viewfinder' USB port on the camera's front panel using the supplied short USB cable. Your URSA Cine EVF will turn on automatically when your camera is powered.

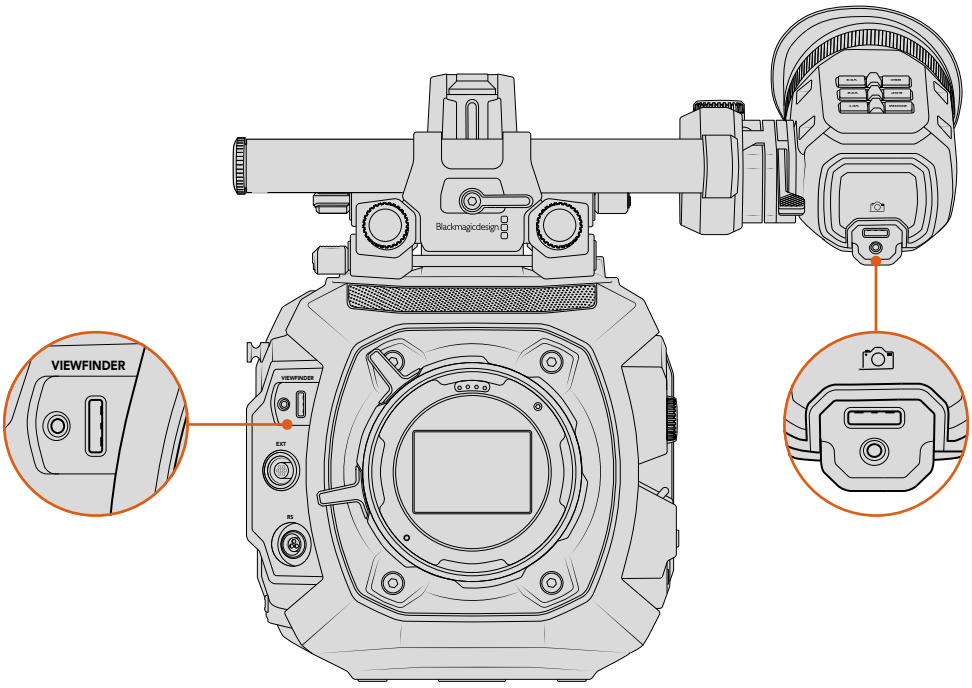

Connect the EVF to your URSA Cine via the front panel 'viewfinder' USB-C port

Positioning URSA Cine EVF

URSA Cine EVF's rod mount design gives you total flexibility when positioning the viewfinder plus the ability to attach accessories, for example lens focus and iris motors. By loosening the clamps and sliding the arm forwards or backwards, rotating the arm and eyepiece, or using a combination of all three, you can position the eyepiece exactly where you need it. This section describes how.

Adjusting Forwards and Backwards

For forwards and backwards movement, the fastest way is to loosen URSA Cine EVF Bracket Rod Mount's thumbscrew and slide the EVF forwards or backwards on the 15mm rods. Tighten to secure in place.

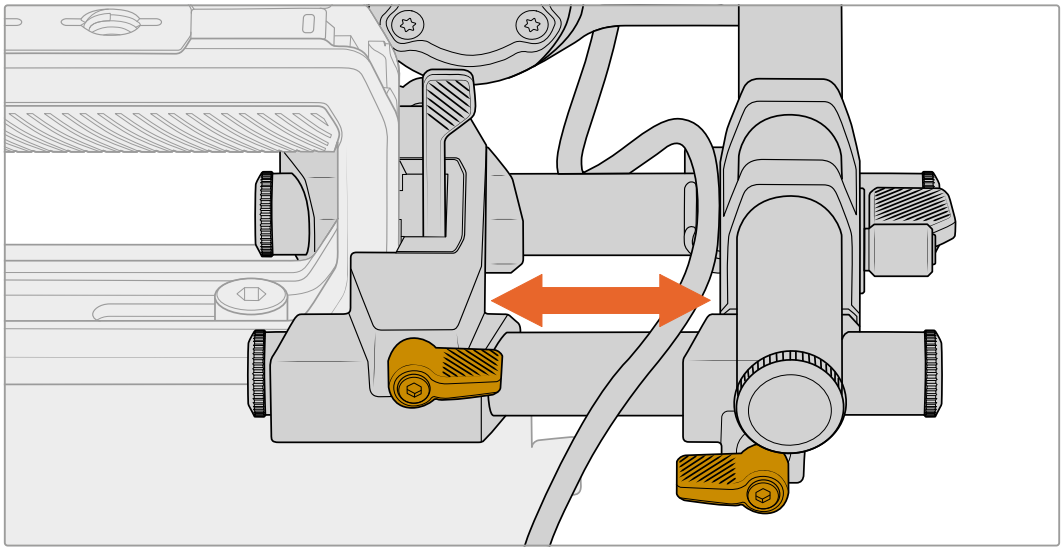

Adjusting the Height

When positioning the height of the eyepiece, one method is to loosen the top rod mount and slide its dovetail bracket up and down the handle's vertical mini dovetail slot. This is also helpful when adjusting the position to fit lens accessories.

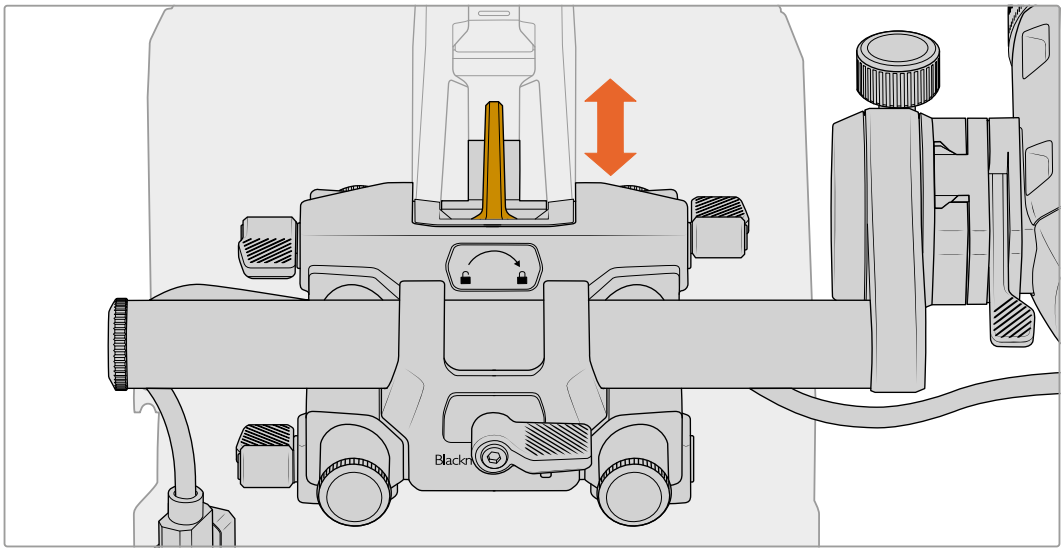

Another method is to loosen the URSA Cine EVF Bracket Rod Mount's clamp plus the EVF and swivel them both to achieve a precise position.

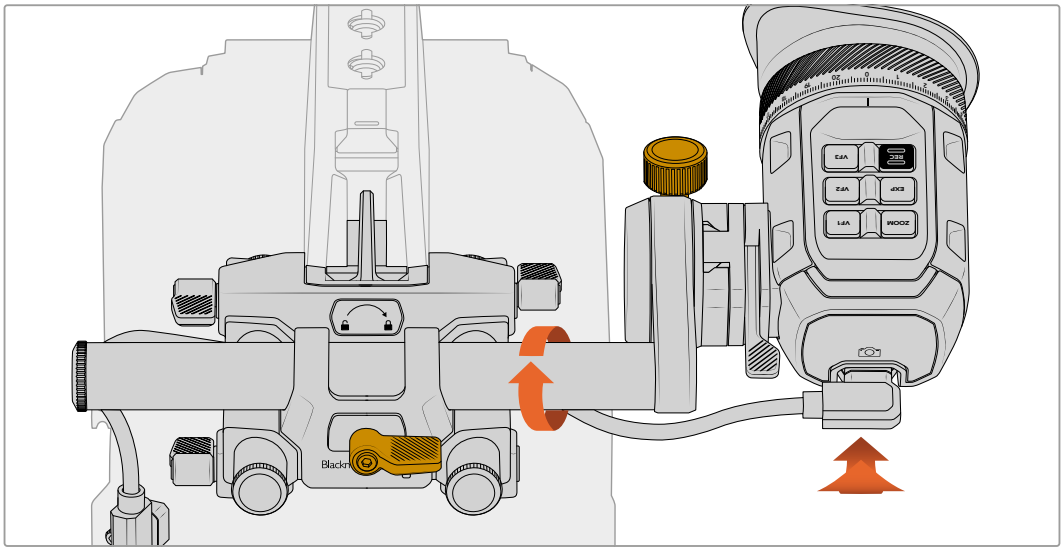

Adjusting the Eyepiece

To rotate the eyepiece, turn the URSA Cine EVF Rotating Bracket's adjustment knob counter clockwise to loosen. Rotate the eyepiece and secure in position by tightening the adjustment knob.

TIP Using a combination of all adjustment options is helpful when positioning the eyepiece for shooting with the camera on your shoulder.

Adjusting the Eye Cup and Glass Diopter

Rotating the EVF adjustment ring clockwise or counter clockwise lets you focus the glass diopter to suit your own vision and the detachable rubber eye cup can be rotated to fit your left or right eye.

URSA Cine EVF and the URSA Cine 12K LF Standard kit with EVF both contain a fabric eyepiece chamois as an alternative to the rubber eye cup. This provides a more comfortable option for pressing your eye against and can work quite well for dissipating heat in very cold or hot situations. If you have purchased it as part of the camera kit you will locate the fabric chamois in the cavity underneath the URSA EVF Extension. The fabric eye chamois has an elastic sleeve that fits around the EVF eyecup mount to secure it in place.

EVF Buttons and Features

On the top of the viewfinder you'll find a group of buttons. These buttons include 3 function buttons, plus a separate record, exposure and zoom button.

Function Buttons

Three programmable backlit viewfinder function buttons are labeled VF1, VF2 and VF3. These buttons can be set to a range of functions, however the default settings for each button are:

Viewfinder Function 1 Focus Assist.
Press to turn the focus assist on or off.

Viewfinder Function 2 Display LUT.
Press to turn the currently set display LUT on or off.

Viewfinder Function 3 Status text.
Press to hide or reveal the status head up display.

Record Button

The record button lets you start and stop recording. You can also customise the record button to perform any of the available functions, similar to the viewfinder function buttons, or even disable the button to avoid the potential of recording accidentally.

Exposure Button

This button lets you turn exposure assist features on or off. For example false color, zebras, or even a combination of both. Set the function using the camera's menu settings.

Zoom Button

This is a dedicated button for zooming into the image to check critical focus. Press to zoom in. The zoom feature can also be set to display on the camera's outputs, for example EVF + LCD1, EVF + LCD2 or all outputs.

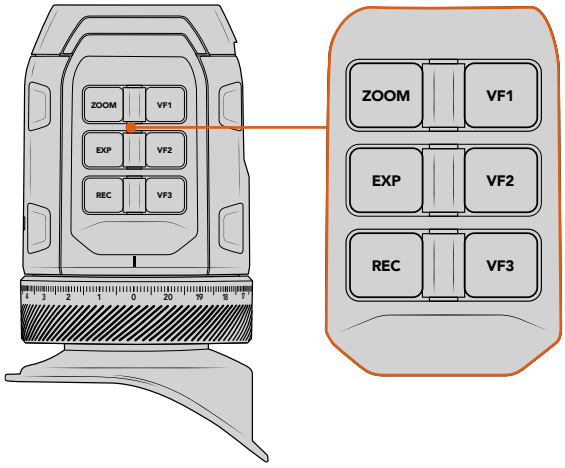

All the buttons on Blackmagic URSA Cine EVF can be customized using your camera's 'setup' page 'EVF' settings

Motion Sensor

The motion sensor on your viewfinder automatically detects when you are near the eyepiece and turns on the OLED display. If you are away from the viewfinder for over twenty seconds in standby mode, the display turns off to conserve power and to extend the life of the OLED display. While recording, the timeout sensor is extended to 5 minutes, at which point the OLED display will be slowly dimmed. Any movement in front of the eyepiece will reset this timer. The viewfinder will detect when you look into the viewfinder eyepiece. Pressing any button on the viewfinder will also turn the display back on.

Deliberately blocking or covering the motion sensor could cause the viewfinder's display to remain powered for prolonged periods of time. This could decrease the lifespan of the display and cause image retention if high contrast images or frame guides are displayed on the viewfinder.

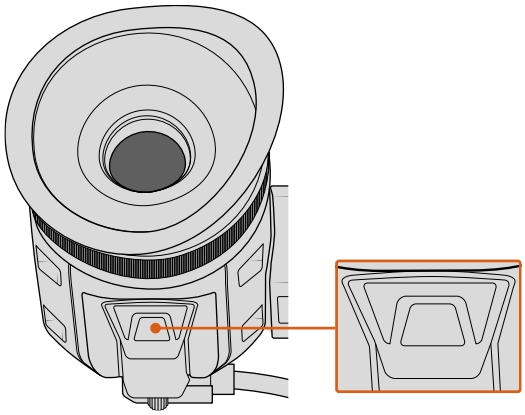

The motion sensor is located at the bottom of the URSA Cine EVF

Attaching URSA Cine EVF Extension

Blackmagic URSA Cine EVF Extension is an EVF accessory that is packed inside the URSA Cine 12K LF Standard kit with EVF and the URSA Cine EVF accessory box when purchasing the EVF separately. The extension arm lets you extend the EVF eyepiece when you're positioned further away from the camera. For example, when operating the camera in a seated position on equipment like a camera dolly or when using a geared head. A hinged bracket is attached to the bottom of the arm so you can fix an eyepiece leveller.

Removing the URSA Cine EVF from URSA Cine EVF Rotating Bracket

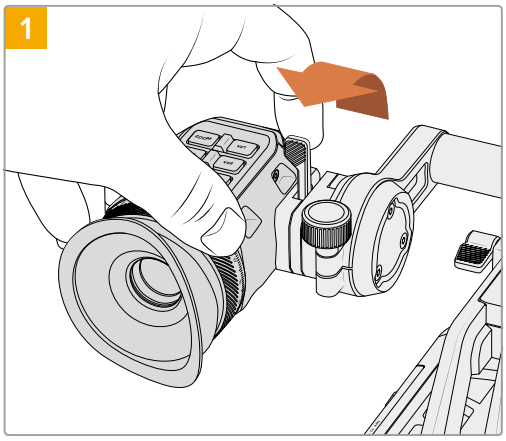

With the eyepiece glass facing you, pull the EVF's locking lever towards you to release the URSA Cine EVF from URSA Cine EVF Rotating Bracket's mini dovetail slot.

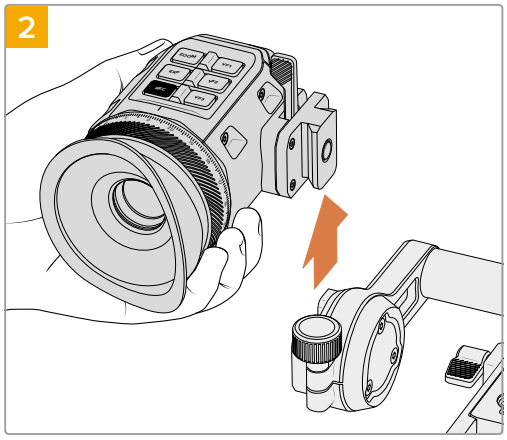

Gently lift the EVF from the slot.

Attaching URSA Cine EVF Extension

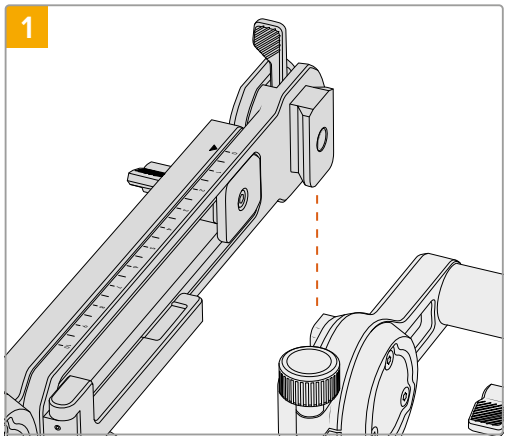

Align URSA Cine EVF Extension's dovetail bracket with URSA Cine EVF Rotating Bracket's mini dovetail slot.

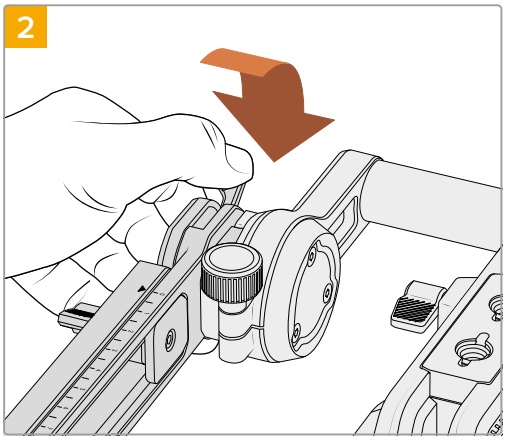

Lower URSA Cine EVF Extension's dovetail bracket into URSA Cine EVF Rotating Bracket's mini dovetail slot and push the eyepiece's locking lever forward to secure.

Attaching the EVF to URSA Cine EVF Extension

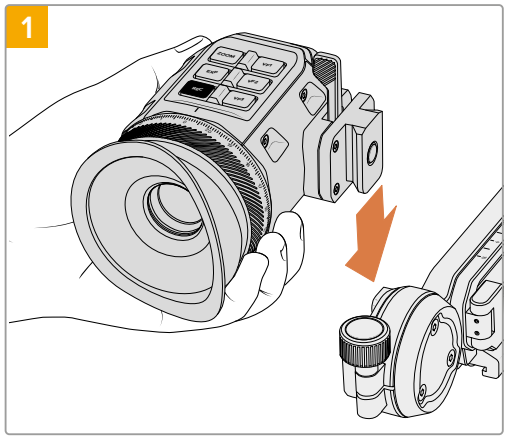

Align URSA Cine EVF's dovetail bracket with URSA Cine EVF Extension's mini dovetail slot.

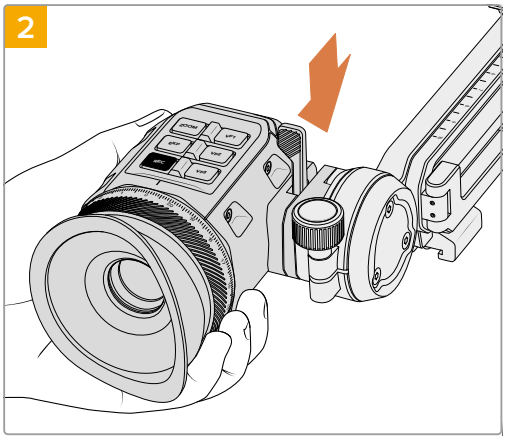

Lower the URSA Cine EVF into URSA Cine EVF Extension's mini dovetail slot.

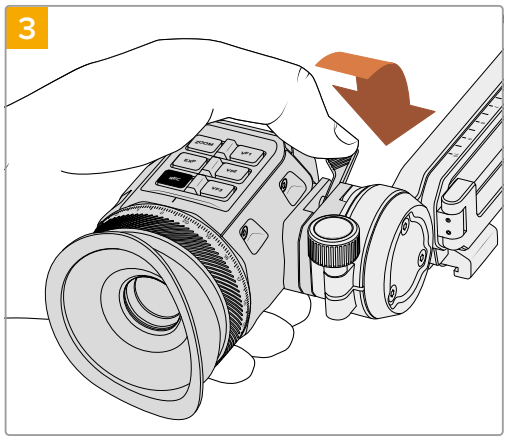

Once firmly seated, push the eyepiece's locking lever forward to secure the EVF.

Extending the Arm

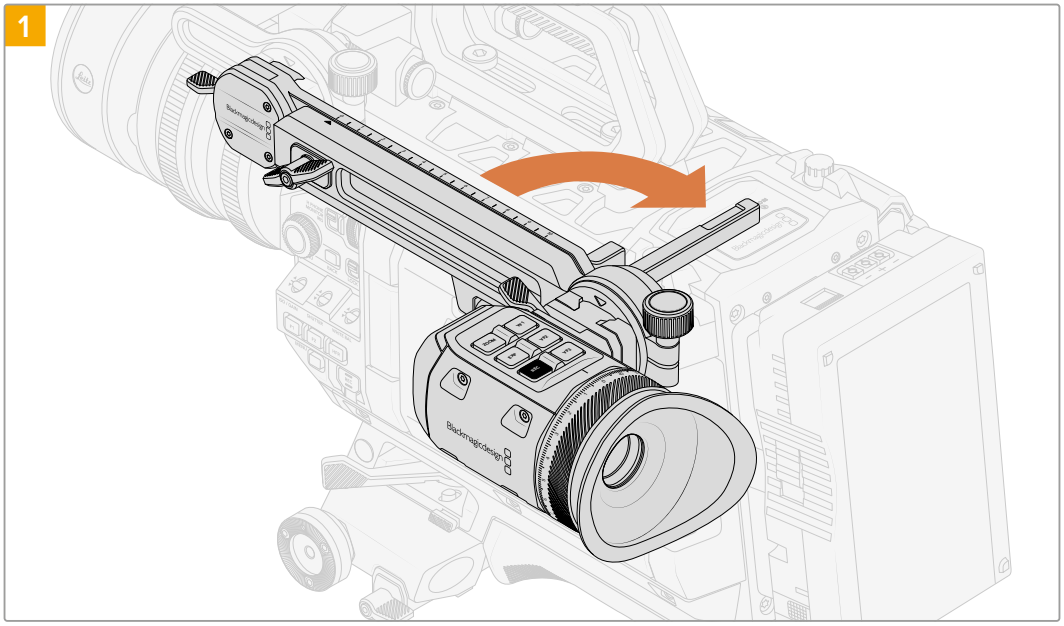

While attaching URSA Cine EVF Extension, you can add support by swinging open the support brace and resting it on URSA Cine's top panel.

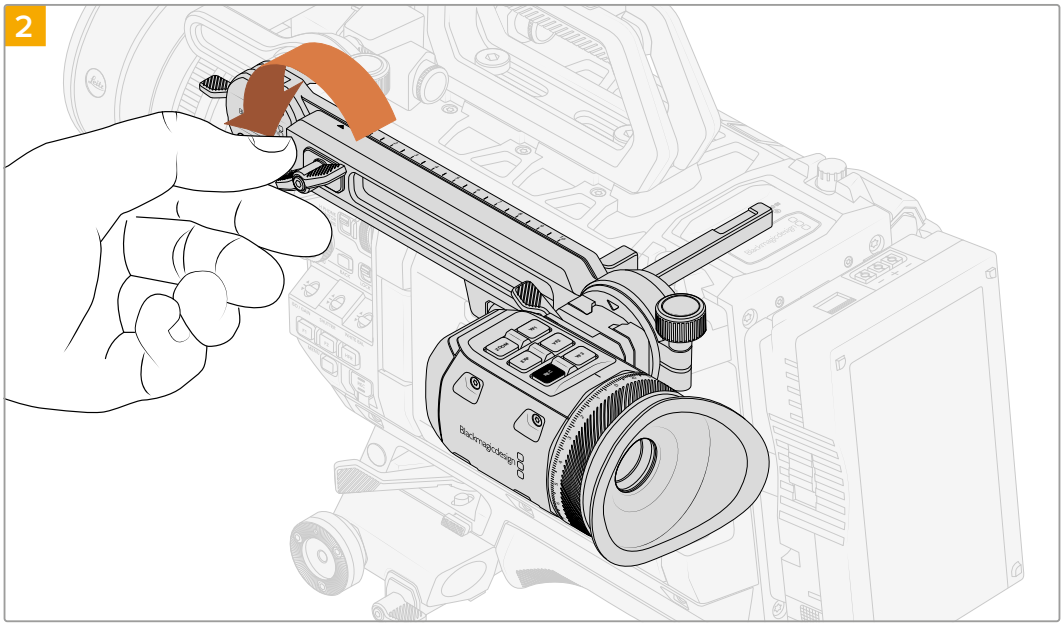

Rotate URSA Cine EVF Extension's thumbscrew counter clockwise to loosen the arm and then extend the arm outwards.

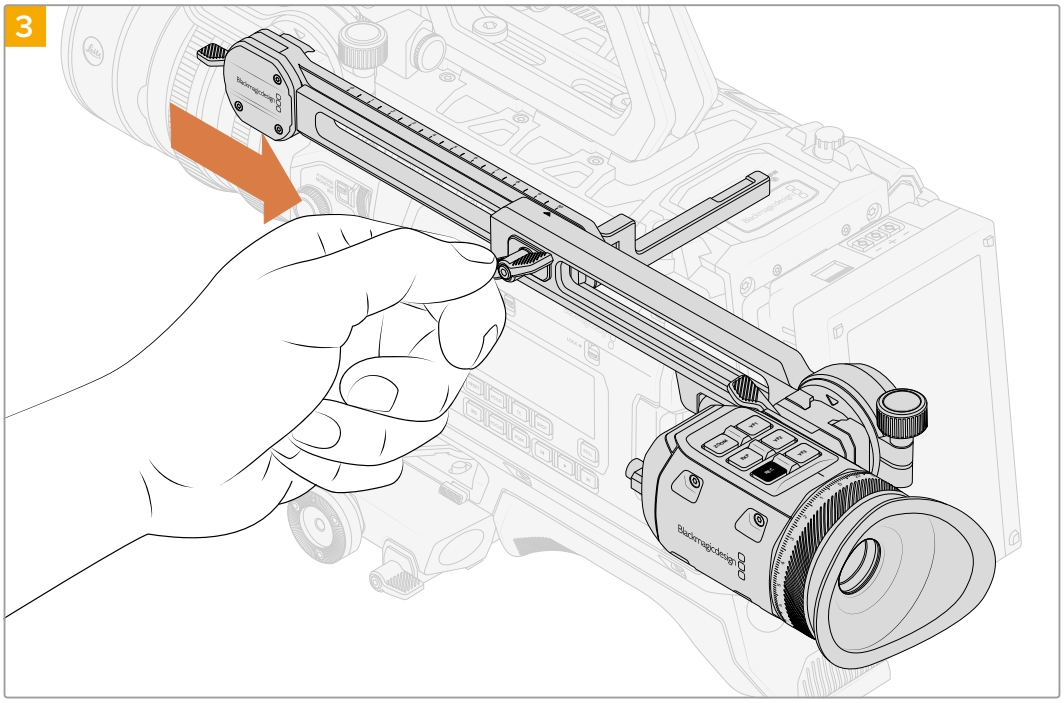

Tighten the thumbscrew to secure the arm in place.

Depending on how far the eyepiece is extended, you may need to swap the short USB cable with the long cable also supplied with your camera.

Attaching an Eyepiece Leveller

When using tripod heads designed for larger camera systems, for example OConnor and Ronford Baker heads, they typically have an eyepiece leveller accessory that is supplied with the head. URSA Cine's EVF Extension has a small bracket underneath the arm that is designed for this accessory.

To attach an eyepiece leveller:

1 Make sure the levelling rod's head mount is attached to the tripod head.

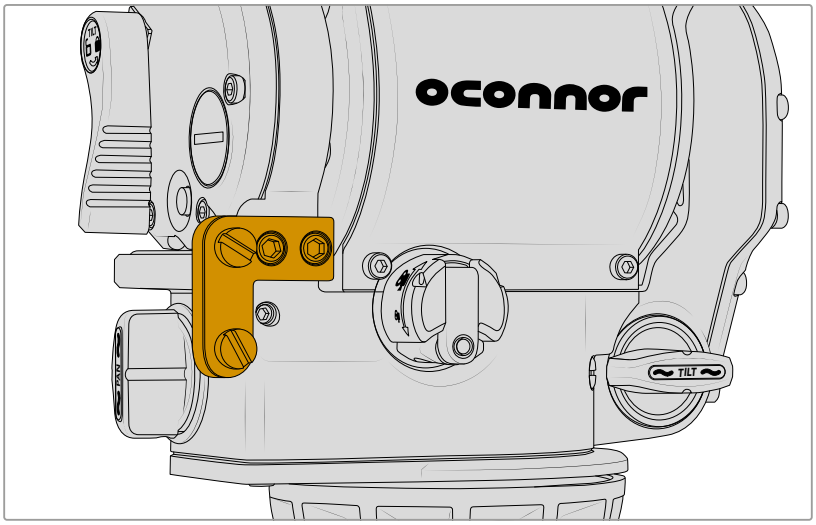

2 Attach the levelling rod bracket to the head mount and tighten the thumbscrews.

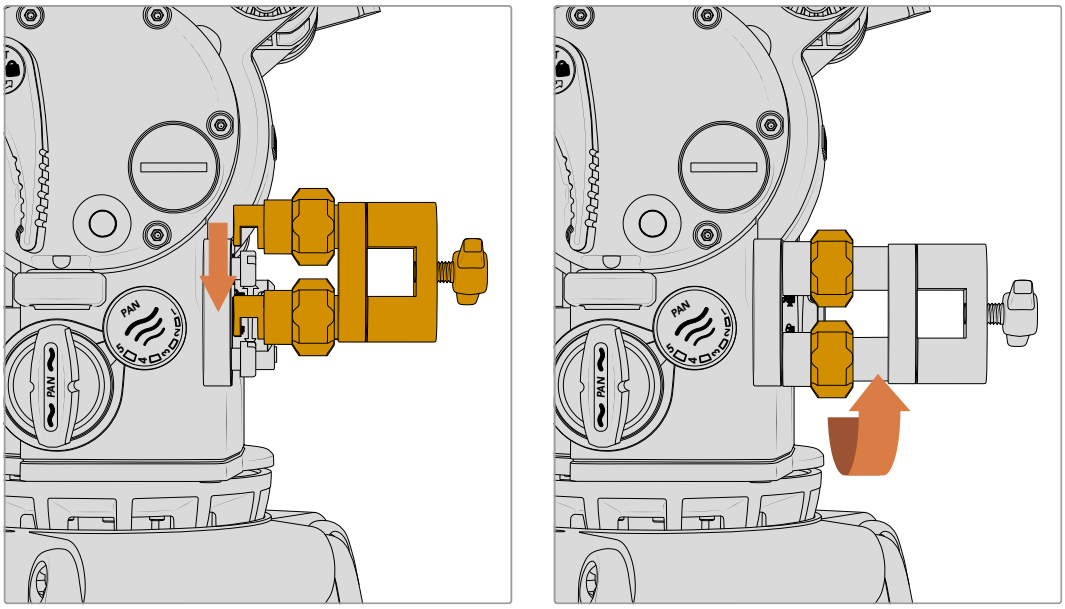

3 Fix the leveller base to the levelling rod bracket and tighten the screws.

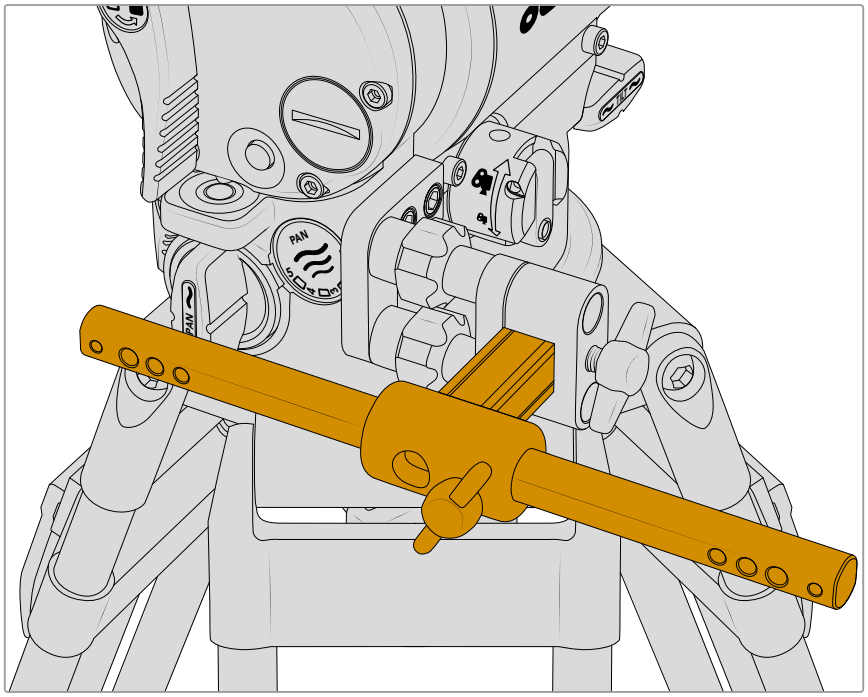

4 Attach the telescopic levelling rod to the mount base.

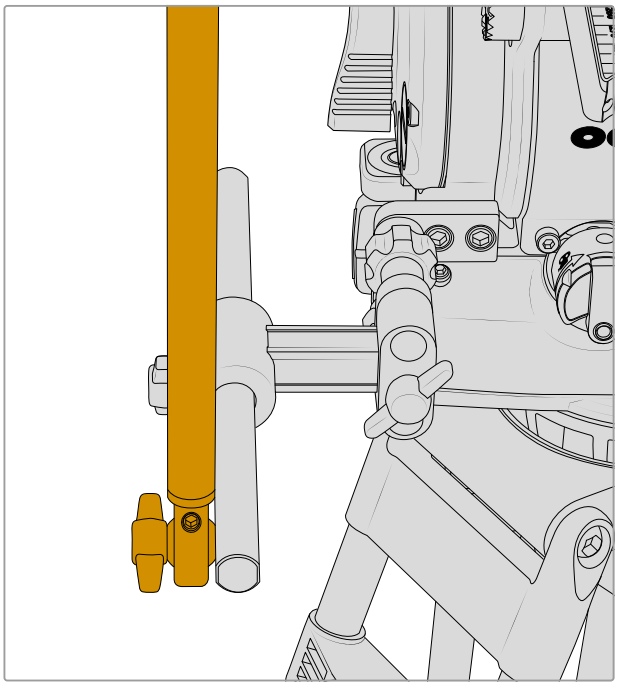

5 Now swing the levelling rod up and extend to meet URSA Cine EVF Extension's leveller bracket. You may need to adjust the rod's length to suit.

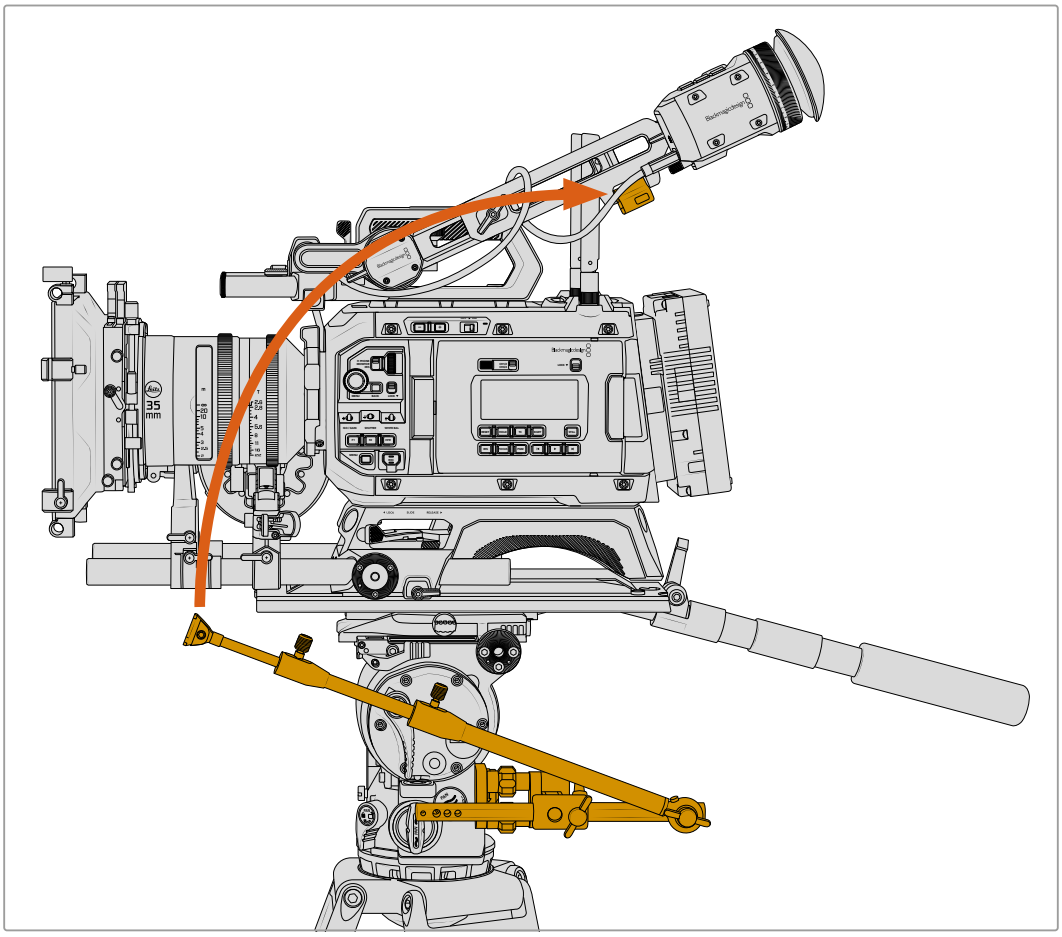

6 Connect the levelling rod to the leveller bracket slot. The bracket slot will click when the rod is locked into place. To release the rod, press the release button on the side of the URSA Cine EVF Extension bracket and remove the rod from the slot.

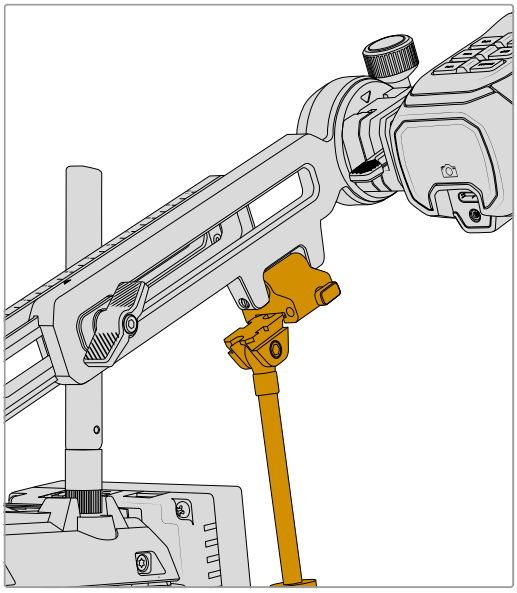

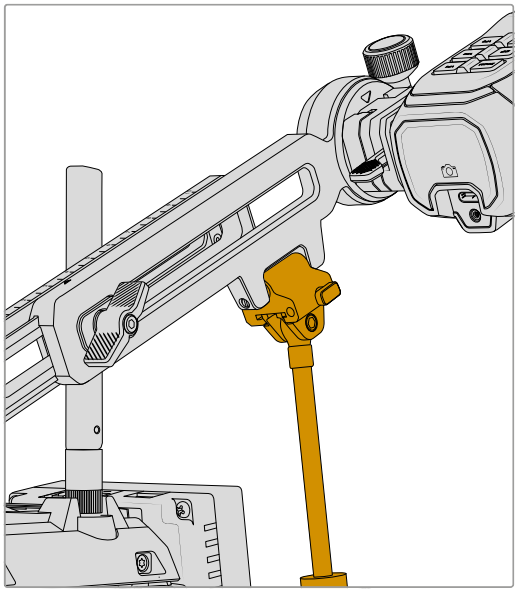

The eyepiece leveller is now fully assembled.

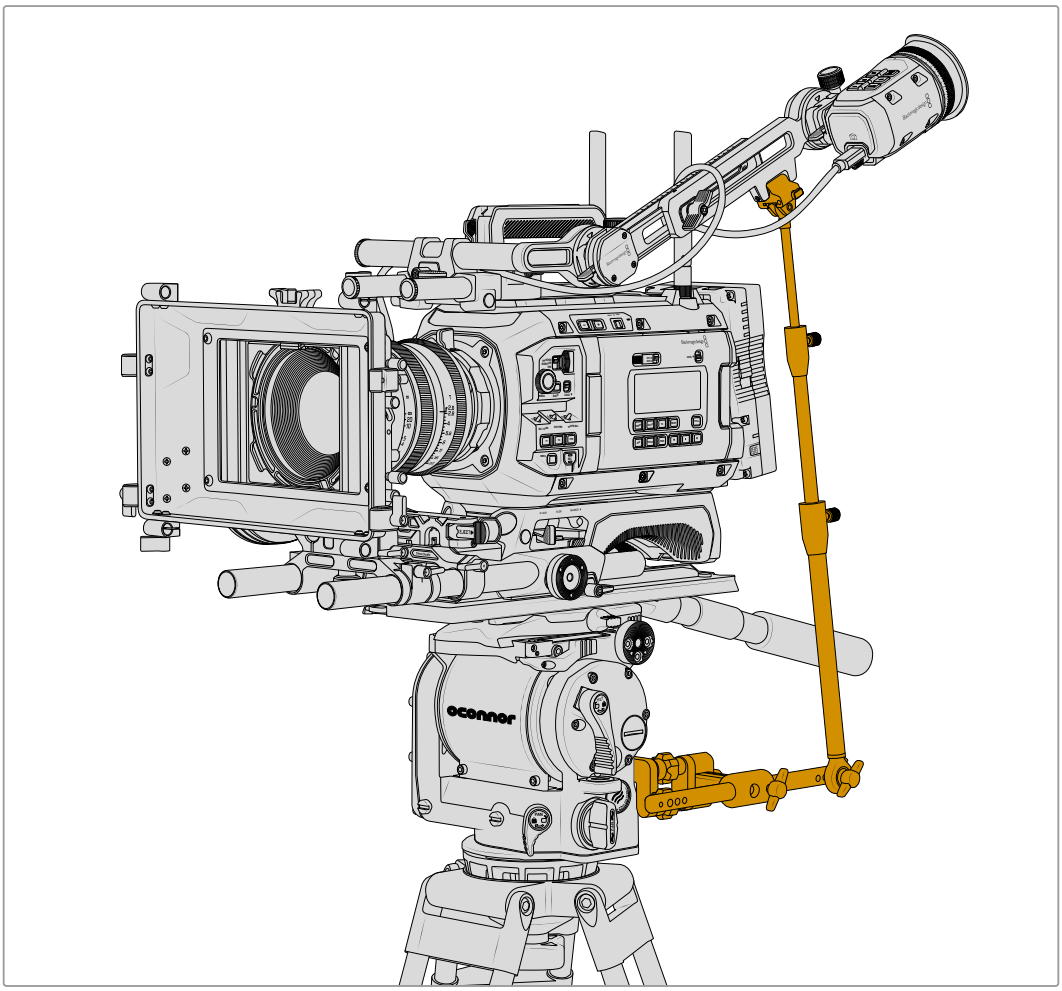

Control Buttons

Blackmagic URSA Cine has control panels on each side of the camera for quick and easy access to all of its essential functions and provides powerful monitoring tools. These panels are designed to be close to hand when shooting from a tripod or on the shoulder.

Forward Control Panel

Your URSA Cine's forward control panel groups together all of the controls you might need to adjust when setting up a shot and recording. These are all designed for easy access while shooting with the foldout monitor closed, such as when operating the camera on the shoulder.

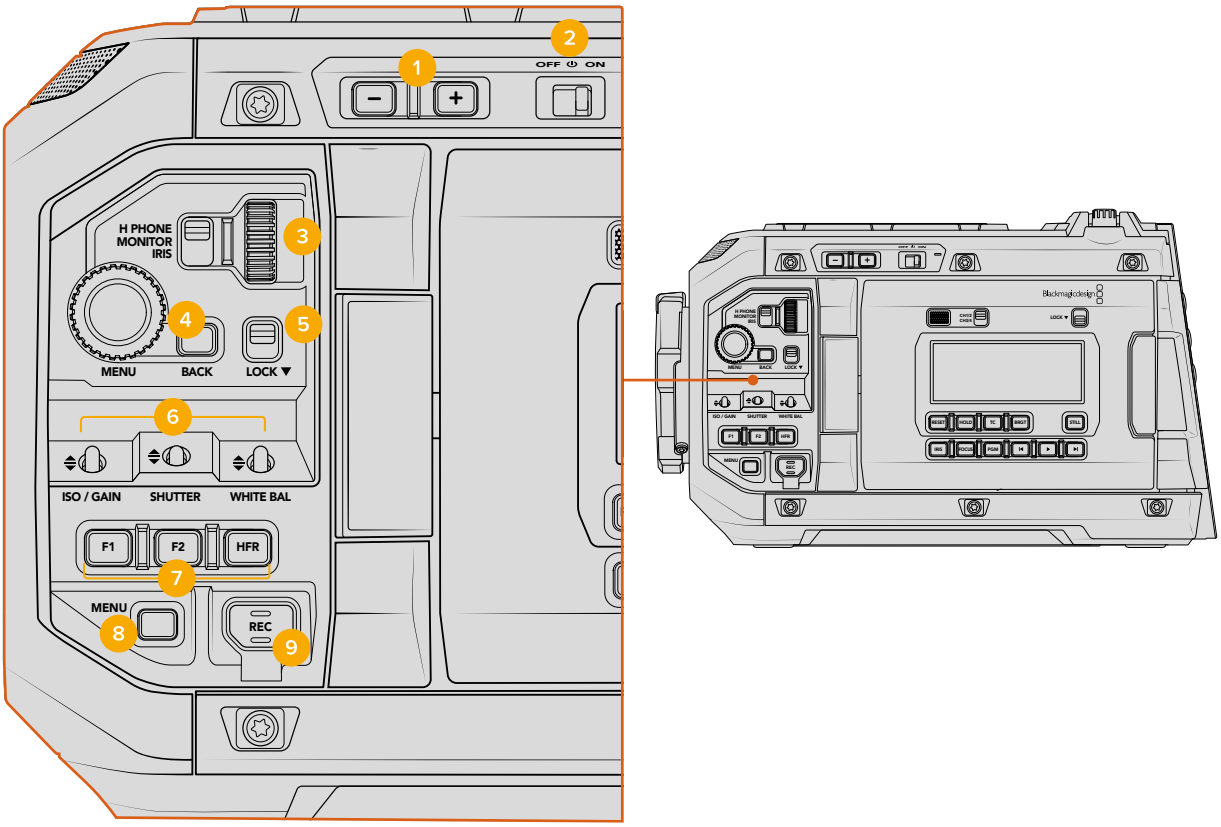

URSA Cine 12K LF's front control panel

1 ND Filters

URSA Cine 12K LF has three internal neutral density filters. Together with a clear filter, the available settings are '2,' '4' and '6' stops. These filters allow you to reduce the amount of light reaching your camera's sensor by a preset number of exposure 'stops'. By reducing the exposure, you can continue shooting at wide apertures in bright conditions such as outdoors on sunny days.

NOTE On URSA Cine 17K 65, the buttons labeled '-' and '+' are used as assignable function button buttons.

To adjust your neutral density setting, press the '-' and '+' buttons to move through each filter. The 'clear' setting means there is no ND filter being used. From settings 0.6 to 1.8, the ND filters gradually increase in density so you can decrease light if you need to.

Because different people prefer to use different terms for each ND filter, the measurement of your ND settings can be customized in the LCD menu. You can identify the ND filter number, amount of stops in light reduction, or the fraction representing the amount of light reduced for the filters to suit your preference.

Neutral Density Filter Settings		
ND Number	**Stops**	**Fraction**
clear	0	1
0.6	2	1/4
1.2	4	1/16
1.8	6	1/64

2 Power Switch

Power your URSA Cine by moving this switch to the ‘on’ position. Power off by moving the switch to the ‘off’ position.

3 Settings Wheel

Set this wheel’s function by adjusting the switch located next to the wheel. The three switch options are ‘headphone,’ ‘monitor’ and ‘iris’.

Headphone

When set to ‘headphone’, the settings wheel will adjust headphone audio levels. Rotate the wheel upwards to increase volume, and downwards to decrease.

Monitor

When set to ‘monitor’, the settings wheel adjusts audio levels on your URSA Cine’s built in monitor speaker. The speaker is located on the outside of the LCD monitor door and can be used to monitor audio without headphones. Rotate the wheel upwards to increase volume, and downwards to decrease. This function is disabled while recording from the camera’s internal microphone to prevent unwanted feedback.

Iris

When set to ‘iris’, the settings wheel is used to adjust the aperture of compatible lenses. Rotating the wheel downwards opens the iris, and turning the wheel upwards closes the iris. These directions mimic the operation of aperture on adjustable still and cinema lenses.

4 Menu Wheel

When ‘status text’ is turned on for your URSA Cine’s EVF output, you can use the menu wheel to navigate many of the head up display features usually accessed via the LCD touchscreen.

Simply press the menu wheel as you would a button to access your URSA Cine’s head up display on URSA Cine EVF. While the menu wheel is active, turn the wheel to select features such as LCD monitor options, frame rate, ISO, white balance and tint. Press the wheel to confirm selections and make additional changes. Use the ‘back’ button next to the wheel to cancel. You can also use the back button to move up a menu level, or exit the menu completely if you’re at the top level. The menu will automatically close after one minute of inactivity.

For more information on setting status text and the controls available, see the ‘touchscreen controls’ and ‘monitor settings’ sections of this manual.

5 Lock

Toggle this switch to lock all of the controls on the forward control panel to prevent them from being accidentally adjusted while shooting. Move this switch to the lower position to lock, and the upper position to unlock.

6 ISO, Shutter and White Balance Switches

These small switches are used to adjust your ISO, white balance, and shutter settings. They are helpful when you want to make fast adjustments without taking your eyes off the shot. Gently push the switches up or down to make setting adjustments. The switches are spring loaded so they always return to a neutral position.

ISO

Push this switch up or down to adjust your camera's ISO setting. Pushing up will increase the setting one interval, and pushing down will decrease one interval. The available settings are 200, 400, 800, 1600 and 3200.

Shutter

Use this switch to adjust the camera's shutter angle or shutter speed, depending on what you have selected in the setup menu. Pushing up will increase the shutter angle or shutter speed to the next available preset, and pushing down will decrease the shutter angle or shutter speed to the next available preset. Holding the switch up or down will move more quickly through available values. There are twenty shutter angle presets between 11.2 and 360 degrees.

TIP Your URSA Cine can also suggest flicker free shutter angles or shutter speeds based on the power frequency in your region. These must be selected through the LCD touchscreen menu. For more information see the 'touchscreen controls' section in this manual.

White Balance

This switch is used to adjust the camera's white balance. Pushing up will increase the color temperature by 50K, and pushing down will decrease it by 50K. Holding the switch up or down will move more quickly through available values.

7 Function 1, Function 2 and High Frame Rate

The F1 and F2 keys are 'function' keys that can be programmed to a variety of commonly used functions using your URSA Cine's 'setup' menu. By default, F1 is set to 'focus zoom' while F2 is set to 'display LUT'.

For more information, see the 'touchscreen controls' section of this manual.

HFR

Use the HFR or high frame rate button to toggle off speed frame rates. To use this button, simply set the off speed frame rate you'd like to use in your URSA Cine's 'frame rate' menu. Pressing this button will toggle between your chosen off speed frame rate and project frame rate. It's worth mentioning that this setting can only be adjusted when the recording is stopped. The HFR button also operates as a 'function key' that you can program to a variety of commonly used functions, or can be disabled.

For more information on project and off speed frame rates, see the 'touchscreen controls' section in this manual.

8 Menu

Press this button to open the menu settings on the LCD touchscreen when the LCD door has been flipped and folded against the side of the camera.

9 Record

The ‘record’ button is marked REC on your Blackmagic URSA Cine’s forward control panel. Press the record button to start and stop recording. Refer to the ‘recording’ section for more information.

Ergonomic Control Panel

On the outside of your URSA Cine’s touchscreen monitor, you’ll find an LCD status monitor and a variety of monitoring, playback, assist and setup controls. This panel lets you see all of your camera’s status information at a glance. Automatic focus can be set using compatible EF lenses and the transport controls let you playback clips.

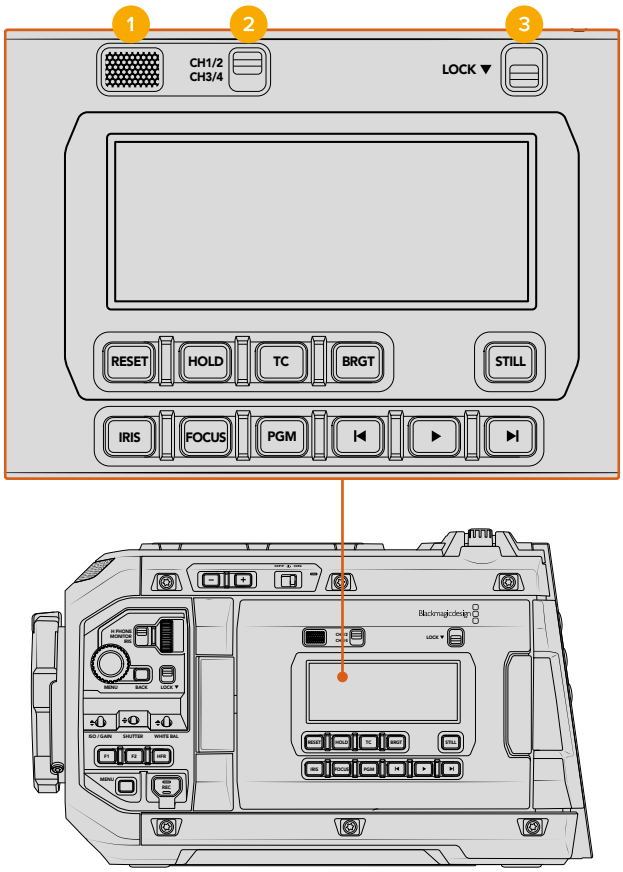

URSA Cine ergonomic control panel

1 Monitor Speaker

The small speaker built into the outside control panel lets you monitor audio when in playback. It is located where your ear would normally be when shooting with the camera on your shoulder.

To adjust the volume of the speaker, simply rotate the settings wheel as described earlier in the ‘forward control panel’ chapter of this section.

2 Monitor Channel Select

Your URSA Cine supports two channels of audio.

3 Lock

Use this switch to lock all of the settings on your URSA Cine's ergonomic control panel. The only controls that will remain active while the lock switch is 'on' are the monitor channel select switches.

Status LCD

This display shows you your URSA Cine's essential settings at a glance without needing to open the internal touchscreen. The following information is visible:

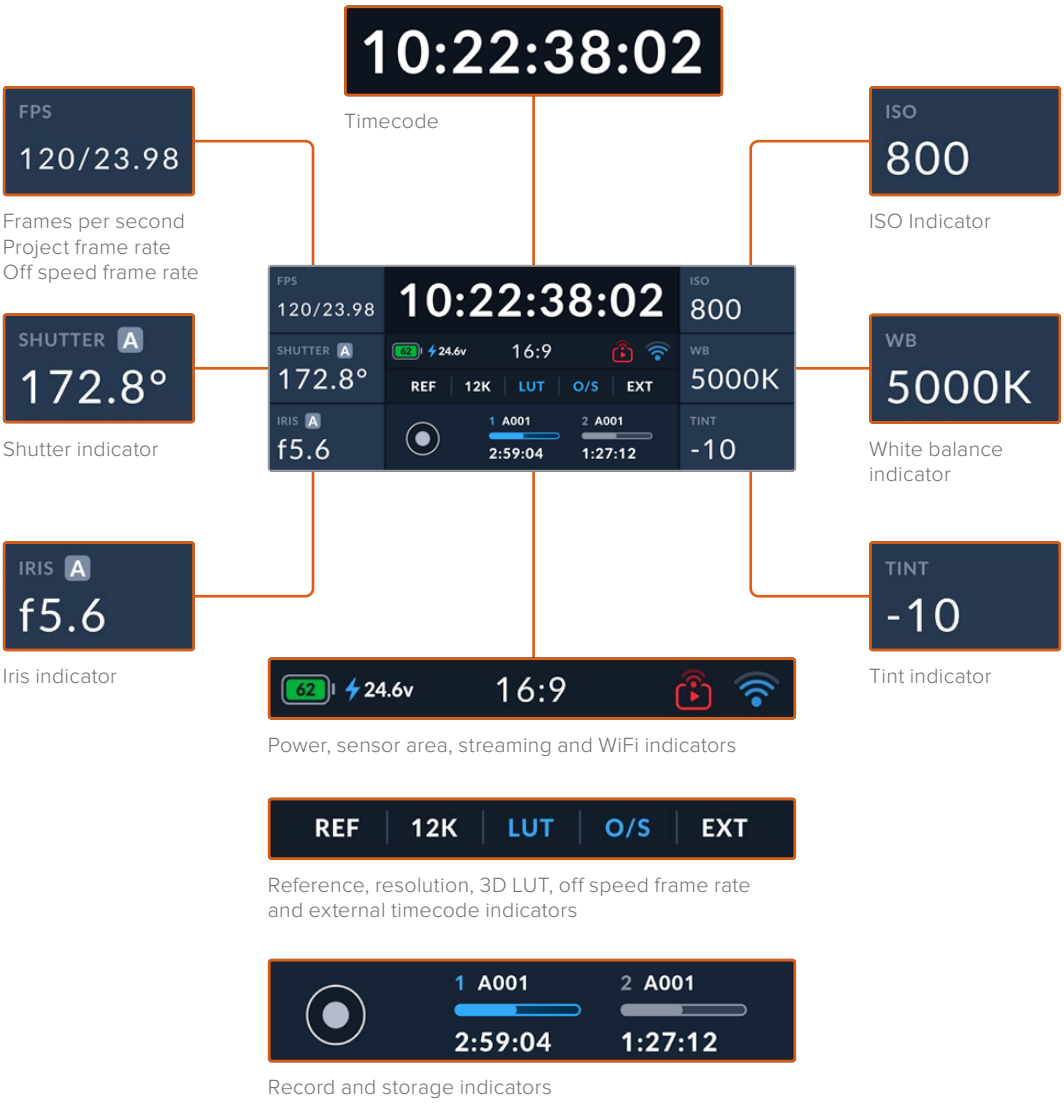

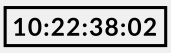

Timecode

Your URSA Cine's timecode indicator displays your current timecode as either clip duration or timecode. You can switch between these two display modes by pressing the 'timecode' button underneath the status LCD.



Record Indicator

While recording, the circular indicator will illuminate red.



Battery indicator

If your Blackmagic URSA Cine is running on battery power, this indicator displays remaining battery life as a percentage.



Power Indicator

This indicator displays the current amount of charge in voltage when using a battery, or displays percentage of charge remaining. If the mains power connector is plugged into your camera, the battery indicator shows as full.



Dropped Frame Indicator

The 'record' indicator will flash a warning symbol when your camera detects dropped frames. Once you stop recording, the indicator will remain on the screen to let you know that the previous clip detected dropped frames. This warning disappears the next time you start recording, or if you power cycle the camera.



Frames Per Second

This indicator displays the currently set frames per second for the project frame rate and sensor off speed frame rate.

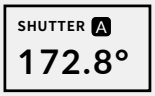

Shutter

URSA Cine's shutter angle will be displayed here.

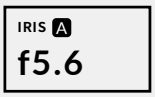

Iris

Displays your current lens aperture. Depending on your lens type, this will be displayed as an 'f' or 'T' stop.



ISO

Displays your camera's currently set ISO.



White Balance

The white balance setting will be displayed here in degrees kelvin.

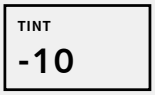

Tint

Displays URSA Cine's tint setting value. Negative values show green tint and positive values show increased magenta.

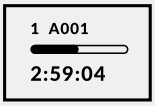

Storage Indicator

Displays a storage bar that shows how much storage space has been used on your camera's media module and the remaining available record time.

The storage indicator will illuminate red while recording a clip. If you don't have a media module inserted, 'no module' will be displayed under the storage bar.

NOTE You can set your URSA Cine to stop recording if dropped frames are detected. See the 'record settings' section in this manual for more information. This feature is user selectable as you may be able to get away with brief periods of 'burst' recording at higher frame rates or resolutions when shooting to slower media.

Status LCD Controls

The control buttons underneath the status LCD let you capture a still frame, set timecode, adjust the brightness of the status LCD and backlit button LEDs.

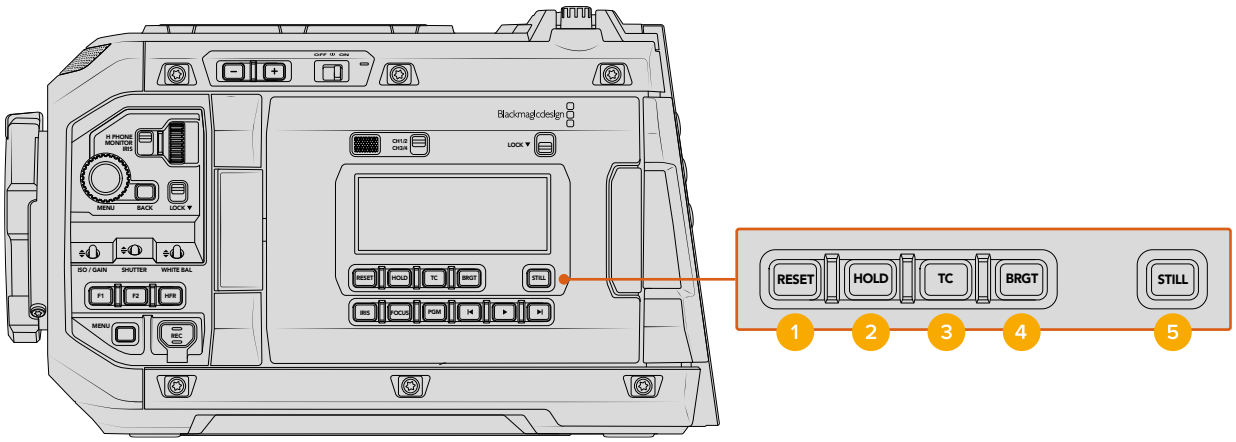

URSA Cine status LCD controls

1 Reset

The reset button allows you to reset the timecode to 00:00:00:00 when you are setting your preset timecode.

2 Hold

Use this button to temporarily hold the main status LCD timecode when the timecode is in free running time of day code. The timecode will continue to run in the background and return to its actual position when you release the 'hold' button. While holding you can take note of the timecode for a particular event. This can be useful in electronic news gathering or documentary situations for noting key timecode points.

3 Timecode

Press the 'timecode' button to toggle the main timecode display's format between clip duration and timecode. By default the timecode will be free running time of day code as this is the most frequently used. If you press and hold the 'timecode' button for five seconds it will switch the camera into record run timecode and the first two digits of the timecode counter will flash. This indicates that you are now editing your preset timecode and allows you to set a specific timecode number for your preset timecode.

Pressing 'reset' at this stage will zero the timecode and then you can turn and press the menu wheel to set the desired value starting with hours, minutes, seconds and then frames. When you are happy with the timecode, press and hold the 'timecode' button again for three seconds to set this as your preset timecode point. You will notice that the timecode generator now shows this value and will only increment when the camera is recording giving you continuous ascending timecode values. To switch your timecode back to free running time of day code, press the 'timecode' and 'hold' buttons simultaneously for three seconds and release.

4 Bright

Press the ‘bright’ button to cycle through four brightness settings for your URSA Cine’s LCD status display and backlit buttons. The settings are ‘off,’ ‘low,’ ‘medium’ and ‘high.’

5 Still

Press this button to capture a single Blackmagic RAW still frame. Image files will be saved to the ‘stills’ folder in the root directory of the media you are currently recording to. These will follow the file naming convention for video clips but the filename will have an ‘S001’ representing the ‘still number’ as the last four digits of the filename. To confirm you have successfully saved a still, an image of a camera will show in the top right corner of the touchscreen and the record indicator on the status LCD will flash three times.

Control and Playback Buttons

The control and playback buttons underneath the status LCD let you set auto iris and focus, use the custom program button, plus view clips via playback controls.

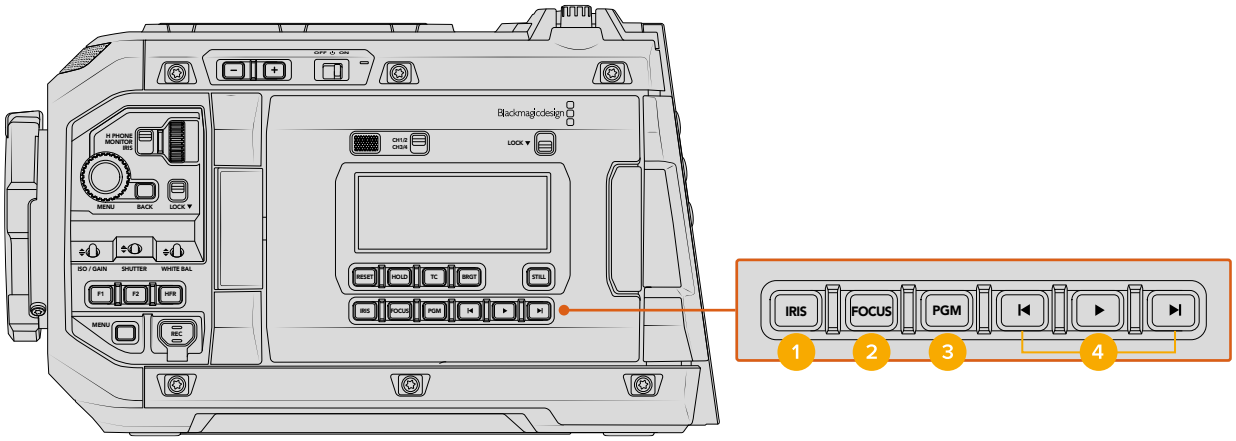

URSA Cine’s control and playback buttons

1 Iris

The ‘iris’ button activates the automatic aperture setting on compatible lenses. When using video dynamic range settings, a single press of the iris button will set an average exposure based on the highlights or shadows in your shot. When using film dynamic range settings, pressing the iris button sets your exposure to the brightest highlight in your shot. This button works with compatible EF lenses and PL lenses connected with a compatible broadcast lens controller.

To set your aperture manually, press the forward and reverse skip transport buttons.

2 Focus

When using an EF lens that supports electronic focus adjustments, press the ‘focus’ button to activate auto focus. A white focus square will appear on any viewfinder or monitor connected to camera’s video outputs. Anything within the square will be correctly focused. When the lens is focused, the square will disappear.

NOTE Some lenses have both manual and auto focus modes. In order for URSA Cine to be able to auto focus with your lens, you need to ensure that your lens is set to auto focus mode.

3 Program

Similar to the F1 and F2 buttons, the program button can be set to use any function available in the setup menu settings. The program button is marked PGM and lets you switch the LCD and rear SDI A output between the camera view and any signal plugged into the SDI B input on the rear panel or SMPTE-2110 stream when the resolution is set to 4K Live SMPTE-2110.

This means if you're using the camera in a live broadcast, you can plug in the switcher's program output and monitor it during the shoot. Press and hold the program button to see your program feed. The program feed will continue to display whilst the program button is being held. As URSA Cine 17K 65 doesn't have the studio features available on URSA Cine 12K LF the PGM button will default to toggling its 'quiet record' feature.

4 Playback Control Buttons

The playback buttons let you start and stop playback, plus skip to the next or previous clip. When using an EF lens, the forward and reverse skip buttons can also be used to open or close the iris when using compatible lenses. Refer to the 'playback' section for more information on how to use the playback buttons.

Internal Control Panel

With your URSA Cine's foldout monitor open, you can access the internal control panel. Use the controls here to set your audio inputs as well as phantom power settings, iris, focus, menu, playback controls and more.

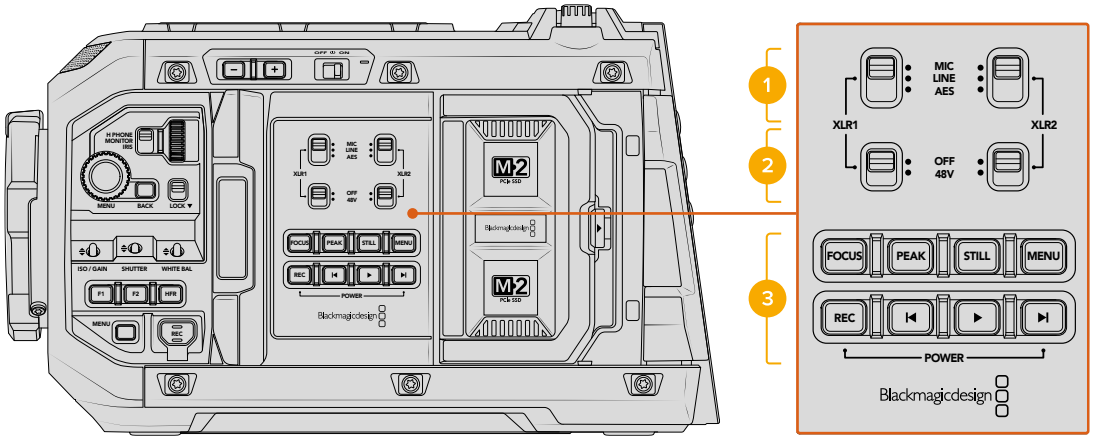

URSA Cine's internal control panel

1 XLR1 / XLR2

Use these switches to set how your URSA Cine's XLR inputs behave when selected as an input source. The options available are mic audio, line level audio and AES digital audio.

2 Phantom Power

Your URSA Cine's XLR inputs can provide 48V phantom power so you can use microphones that aren't self powered. Move this switch to '48V' to enable phantom power for any microphone connected to the XLR above, or 'off' to disable phantom power.

NOTE It is standard practice to plug in your XLR cable before switching phantom power on. It is also important to switch phantom power to 'off' when you no longer have a phantom powered microphone connected. Connecting devices that don't have phantom power protection built into their AES XLR outputs whilst still sending phantom power from the camera's XLR audio inputs may damage your equipment. Always ensure that the 48V switch is turned 'off' when you disconnect your microphone.

3 Control and Playback Buttons

In addition to playback controls, these buttons also include:

Focus

When using an EF mount with an EF lens that supports electronic focus adjustments, press the 'focus' button to activate auto focus. A white focus square will appear on the fold out monitor. Anything within the square will be correctly focused. When the lens is focused, the square will disappear.

It's worth noting that some lenses have both manual and auto focus modes. In order for URSA Cine to be able to auto focus with your lens, you need to ensure that your lens is set to auto focus mode.

Peak

Press the 'peak' button to activate focus peaking. Your camera has two focus peaking modes, traditional focus peaking, which artificially sharpens areas of the image that are in focus, and 'colored lines' with overlays the sharp areas of your image with black, white, red, green or blue colored lines. See the 'monitor settings' section of this manual for more information. Focus peaking is not recorded to storage media, but can be displayed on all outputs by activating overlays using the touchscreen menu.

It's worth mentioning if you are recording your video output to a Blackmagic Video Assist or HyperDeck disk recorder, you may want to ensure that you don't have peaking switched on for that output. This can be achieved using the 'clean feed' feature in the monitor settings. For more information on outputting a 'clean feed' see the 'monitor settings' section in this manual.

Still

Press this button to capture a single Blackmagic RAW frame.

Menu

Press the 'menu' button to open the main LCD menu. Refer to the 'settings' section for more information and how to adjust settings.

Record

Press any of the record buttons marked REC to start and stop recording. Refer to the 'recording' section for more information.

Playback Control Buttons

The playback buttons let you start and stop playback, plus skip to the next or previous clip. When using the EF mount, the forward and reverse skip buttons can also be used to open or close the iris when using compatible lenses. Refer to the 'playback' section for more information on how to use the playback buttons.

NOTE You can power your URSA Cine on or off via a combination of internal control panel buttons. Holding the ‘rec’ and ‘forward skip’ buttons will power up the camera if it is turned off, or power it off if it is turned on. If your camera’s power switch is set to ‘on’ but your camera is powered down, it may have been powered down via the control panel. Toggle the power switch to return it to normal operation.

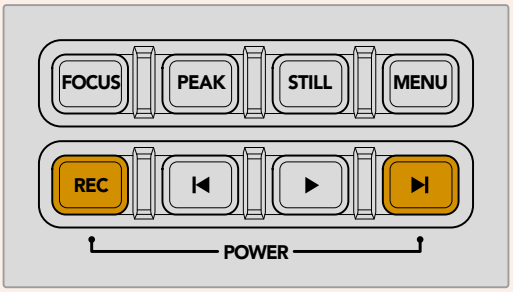

Assist Station

The right side assist station provides a touchscreen LCD for picture and audio monitoring and changing settings, plus you can use the focus page to set custom focus and iris marks for maintaining perfect focus and exposure.

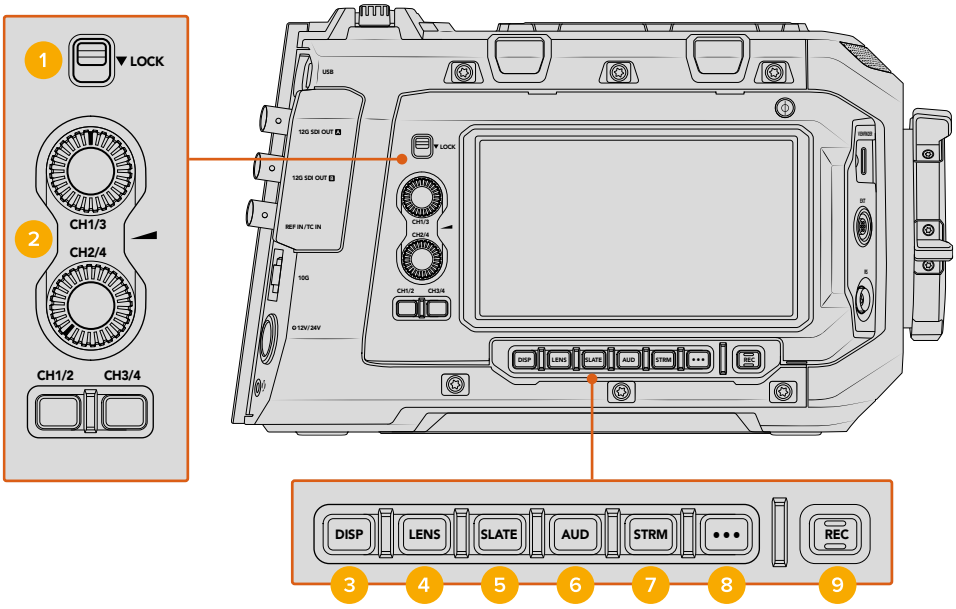

1 Lock

Set the ‘lock’ switch to disable the assist station. This prevents any accidental changes during your shoot.

2 Audio Knobs

Rotate the audio knobs clockwise to increase the levels or counter clockwise to decrease them. Press the selection button underneath labeled CH1/2 to adjust audio channel 1 and 2 accordingly with the knobs. The button will illuminate green when selected. Press the button labeled CH3/4 to adjust the levels of channels 3 and 4 instead. When adjusting the knobs, the LCD will automatically display the levels so you can see the changes. After 10 seconds of inactivity, the LCD will return to the main display.

To deselect both buttons so no levels are changed accidentally, press and hold both the CH1/2 and CH3/4 buttons until they illuminate white.

3 Display Button

Press the ‘display’ button to toggle the LCD touchscreen between meters, codec and resolution or clean feed display options.

Press and hold the ‘display’ button for 3 seconds to turn the assist station LCD off and disable the touchscreen. This can be useful when working in a dark environment, or if you are moving position and want to avoid making accidental changes to your camera’s settings. Pressing any of the assist station buttons will switch the LCD display back on and re-enable the touchscreen

If you are handling the camera a lot and do not wish the buttons to re-activate the screen you can use the ‘lock’ switch when the screen is dimmed for further protection.

4 Lens Button

Press the ‘lens’ button to cycle through different views on the 1st AC screen. Options include maximized, minimal and clean. The maximized view includes both exposure and focus scale, minimal view displays only the focus indicator and the clean view is with no overlays.

5 Slate Button

Press to toggle the slate feature on or off. The slate lets you enter metadata for post production use. For more information, refer to the ‘entering metadata’ section.

6 Audio Button

Pressing the ‘audio’ button opens the audio menu settings. Here, you can change audio settings for each channel using the touchscreen sliders and buttons, plus monitor levels. The levels on the touchscreen will also reflect changes made using the audio knobs. Refer to the ‘settings’ section for more information about each setting on the touchscreen and how to change them.

7 Stream Button

Press the stream button marked ‘STRM’ to open the streaming display. This lets you start and stop an H.264 live stream locally or via the Internet.

Tap the ‘on air’ button to start a stream and ‘off’ to stop.

The streaming status information displayed includes:

On Air Status - Prior to streaming, the on air status indicator will display ‘off’ to let you know URSA Cine is standing by and ready to broadcast. When streaming begins, the indicator will display a bright red ‘on air’ status until streaming is stopped. Press the ‘off’ button to stop streaming.

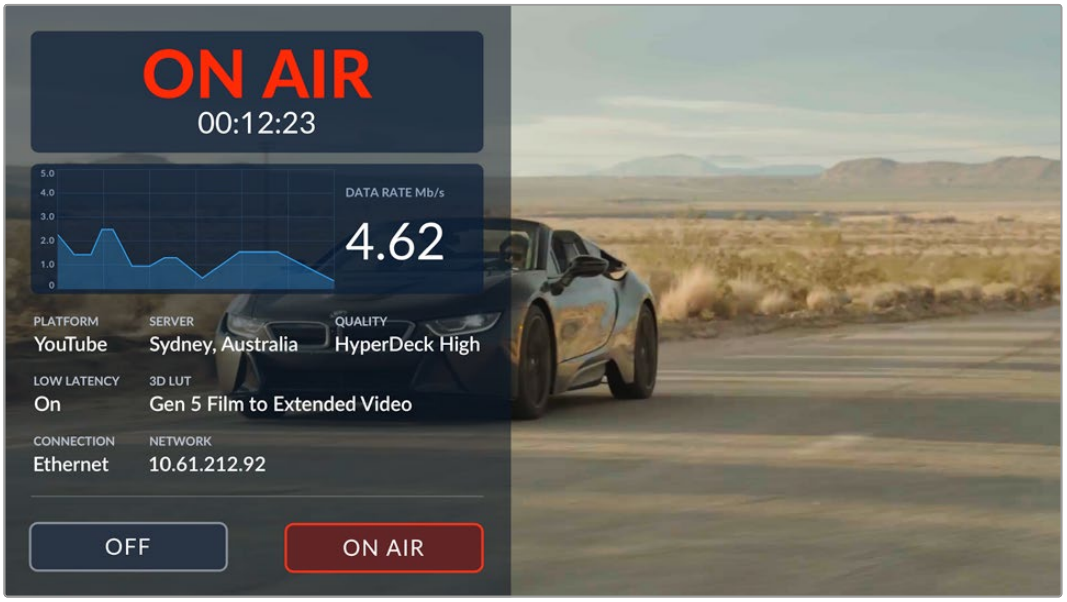

Underneath the on air indicator is the duration counter. When you press the on air button, the duration counter will start running.

Data Rate – The data rate display shows the current data rate of of the stream over the past 60 seconds. The data rate is measured in megabits per second.

The live stream indicators underneath displays information about your live stream settings. This includes the streaming platform, server and quality settings. It also lets you know if low latency is turned on, if there is a 3D LUT applied, the connection type and network IP address or Wi-Fi router.

All of this information is superimposed over the live view from your camera.

8 Menu Button

Press the menu button marked with the ellipsis icon to open the menu settings. Press again to close the menu. You can also tap on the menu icon in the LCD touchscreen to turn the menu settings on and off.

If you find you don't need a physical menu button on the side of your camera, you can remap the menu button to another feature using your camera's setup menu. For example, it can be set to trigger playback or toggle ND filters. For more information, refer to the 'settings' section.

9 Record Button

Press the 'record' button to start recording a clip, the button will illuminate red. Press again to stop recording.

The 'record' button on this side of the camera can be remapped to a different function in your camera's 'setup' menu. If you are concerned about triggering record accidentally, you can disable the record button by setting it to 'none'. For more information, refer to the 'settings' section.

Using the 1st AC Page

When shooting with PL or LPL lenses that have built in Cooke /i technology, and also some EF cine primes and zooms your URSA Cine will be able to read the movement of the focus, iris and zoom position through the lens mount. This means you can set marks on the focus distance scale on the right of the screen that you can use for precisely and repeatedly hitting any specific exposure and focus points you choose.



The 1st AC page lets you set multiple focus marks on a line scale to make sure you achieve perfect focus and exposure

To set the focus marks:

1 Press the 'lens' button to open the 1st AC page on the assist station touchscreen.

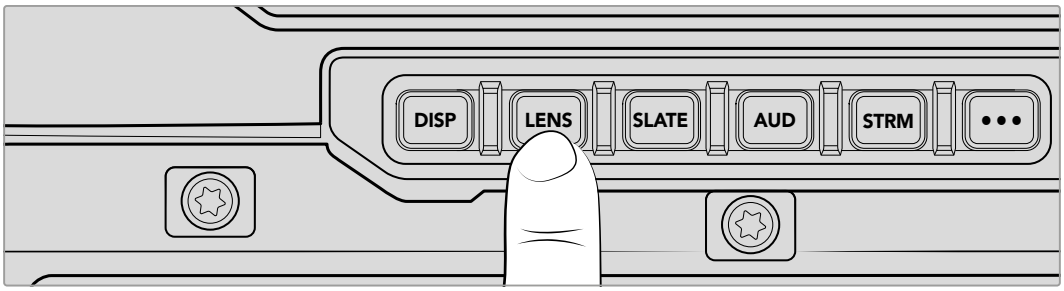

2 Adjust focus on the lens and find your desired focus point. Once set, tap the plus icon on the touchscreen. A focus mark is set on the focus scale.

3 Adjust the lens focus again to find the second focus point and repeat the same procedure.

Now when you adjust focus, you can repeatedly find those exact points by monitoring the focus marks on the focus scale.

The color of the focus marks can be changed so they are easier to identify in a sequence. Simply tap and hold the focus mark to reveal the color editor. Select the color you want and tap outside of the editor to close.

To delete a focus mark, open the color editor and tap the trash icon. Tap the 'reset' icon to remove all focus points.

Lens Scales

Some lenses such as those from Cooke Optics, Zeiss Supreme, Supreme Radiance and CP.3 XD lenses running 1.90 firmware will provide not only their name, serial number, focus, iris and zoom position to the camera but also their minimum focus distance and iris range extremes as well as all of the specific focus distance marking points that are present on the barrel of the lens. This means they will be displayed exactly the same way on the focus scale instantly without needing to program them in at all.

TIP The focus markers overlay can also be sent to any output so you can see them on the EVF, LCDs and any SDI monitor connected to your camera's SDI outputs. To do this, open your camera's menu and go to page 2 of the 'monitor' settings. Here, choose which output you want to view markers on and set the display to 'focus markers'. Make sure status text is also set to 'on'.

Self Calibration

For other i/Data lenses that provide positional information electronically, but not information like their focus and iris range, the camera is able to self calibrate for each lens, learn this information and save it to its internal database. To do so after mounting the lens, simply move the lens to each end point of its focus and iris adjustment range by moving the focus or iris ring. This information will then be added to the scale and saved to the camera for next time this lens is mounted. If you are on the 1st AC page when a lens like this is first mounted you will be able to see this happening and see the scale expanding in front of you as you move the lens barrel towards each end of its range.

It's important to note that focus scales are only able to be shown for lenses that provide accurate focus distance information to URSA Cine through the lens mount. This means regular EF stills lenses that don't supply this information will not show focus scales on the 1st AC Page.

Touchscreen Controls

Your Blackmagic URSA Cine's fold out LCD touchscreen pivots for shooting high and low angles. You can face the display towards the talent, or even fold the LCD back against the camera with the touchscreen facing out. Buttons on the outside of the LCD panel let you control your URSA Cine when shooting on the shoulder using the URSA Cine EVF and the LCD closed.

The touchscreens feature a touch and gesture based interface that is specifically designed for fast and intuitive user operation. By touching and swiping on different areas of URSA Cine's LCD touchscreens, you can quickly access the camera's functions while shooting.



Your URSA Cine's LCD touchscreens have a comprehensive head up and status display and give you easy access to your camera's most used settings

LCD Monitor Options

Tap the 'monitor' icon at the top left of your URSA Cine's LCD touchscreen to access the LCD monitor settings. These settings let you toggle and adjust the appearance of your URSA Cine's monitoring features, including zebra, focus assist, frame guide, and grids. When accessing LCD monitor options, the controls for these features appear in a tabbed menu along the bottom edge of the touchscreen.



Tap the icon at the top left of your URSA Cine's touchscreen to access LCD monitor options

Zebra

The ‘zebra’ setting toggles the appearance of zebra on the touchscreen, as well as setting the zebra level for all video outputs.

Zebra displays diagonal lines over areas of your image that exceed a set exposure level. For example, setting zebra to 100% shows which areas are completely overexposed. This is useful for achieving optimum exposure in fixed lighting conditions.

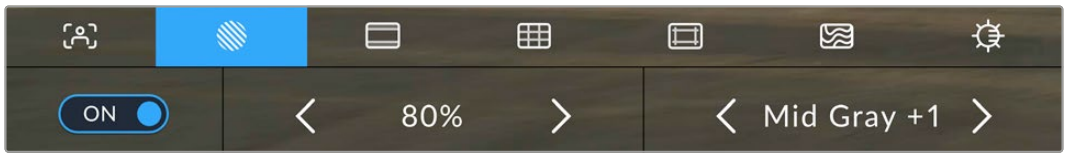

Tap the ‘zebra’ icon to access your URSA Cine’s zebra settings

To toggle zebra for the LCD touchscreen, tap the switch icon in the bottom left of the screen while in the ‘zebra’ tab. Tap the left and right arrows to decrease or increase the zebra percentage value. The second zebra setting lets you turn mid gray zebra zones on or off, or mid gray plus 1 stop.

For information on enabling zebra on your camera’s video outputs, see the ‘monitor settings’ section in this manual.

TIP If you’re shooting in variable light such as outdoors on a partly overcast day, setting your zebra level lower than 100 can warn you of potential overexposure.

Focus Assist

The ‘focus assist’ setting toggles the appearance of focus assist on the LCD touchscreen, as well as setting the level of focus assistance for all outputs on your URSA Cine.



Tap the ‘focus assist’ icon to access your URSA Cine’s focus assist settings

To toggle focus assistance for the LCD touchscreen, tap the switch icon in the bottom left of the screen while in the ‘focus assist’ tab. To set the level of focus assistance for all outputs on your URSA Cine, drag the slider left to decrease the sensitivity and right to increase.

The optimum level of focus assistance varies shot by shot. When focusing on actors, for example, a higher level of focus assistance can help resolve edge detail in faces. A shot of foliage or brickwork, on the other hand, may show distracting amounts of focus information at higher settings.

For information on enabling focus assist on your camera’s video outputs, see the ‘monitor settings’ section in this manual.

TIP Your URSA Cine has two focus assist modes. You can switch between ‘peaking’ and ‘colored lines’ focus assistance in the ‘monitor’ settings menu. For more information, see the ‘monitor settings’ section in this manual.

Touch to Focus

Focus compatible lenses in any region of the image by pressing the LCD screen for a moment where you want to focus. The camera will focus your lens in the chosen location. If the head up display is obscuring the area you wish to focus, simply swipe up or down to move it out of the way.

After you have set the location for auto focus, pressing the focus button on the camera will trigger auto focus in that specified region. Double pressing the ‘focus’ button will reset the focus point to the center of the screen.



URSA Cine touchscreen with touch to focus

Frame Guides

The ‘frame guide’ setting toggles the appearance of frame guides on the LCD touchscreen. You can also choose from a range of frame guide options for all outputs on your URSA Cine.

Frame guides include aspect ratios for various cinema, television and online standards. These guides can also be used as safe area guides to assist with framing your shot where you know the shot will be stabilized in post production, which can crop the edges of the image. They can also be used to indicate a specific crop.

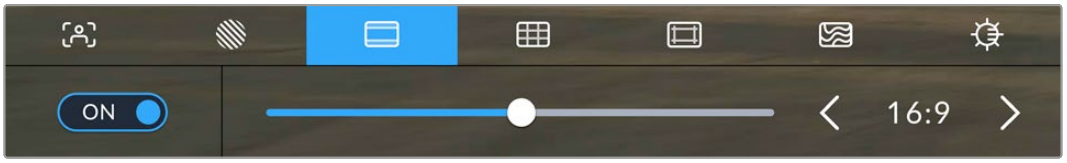

Tap the ‘frame guides’ icon to access your URSA Cine’s frame guide settings

To enable or disable frame guides on your URSA Cine’s LCD touchscreen, tap the switch icon at the bottom left of the frame guides settings.

Choose the frame guide you want to use by dragging the slider left and right, or tapping the arrow buttons on either side of the currently selected aspect ratio.

The available guides are:

2.35:1, 2.39:1 and 2.4:1

Displays the broad widescreen aspect ratio compatible with anamorphic or flat widescreen cinema presentation. The three widescreen settings differ slightly based on the changing cinema standards over time. 2.39:1 is one of the most prominent standards in use today.

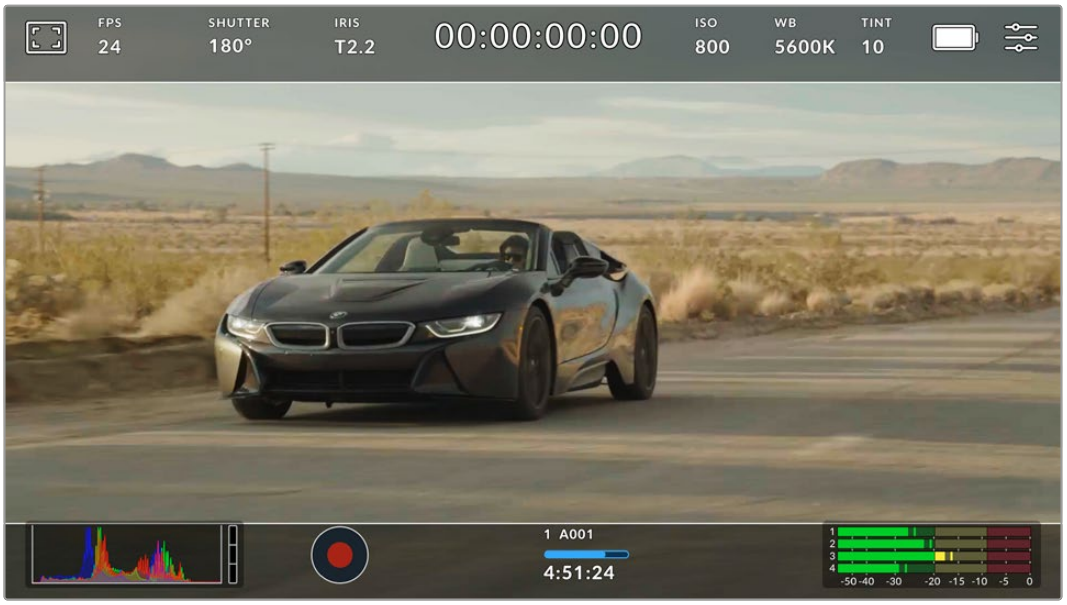

The LCD touchscreen with 2.40:1 frame guides enabled

2:1

Displays a ratio slightly wider than 16:9 but not as wide as 2.35:1.

1.85:1

Displays another common flat widescreen cinema aspect ratio. This ratio is slightly wider than HD 1.78:1 but not as wide as 2.39:1.

16:9

Displays a 1.78:1 aspect ratio compatible with 16:9 HD television and computer screens. This ratio is most commonly used for HD broadcasting and online videos. The same aspect ratio has also been adopted for Ultra HD broadcasting.

14:9

Displays a 14:9 aspect ratio used by some television broadcasters as a compromise between 16:9 and 4:3 television sets. Ideally, both 16:9 and 4:3 footage remains legible when center cropped to fit 14:9. You can use this as a compositional guide if you know your project may be broadcast by a television station that uses 14:9 cropping.

4:3

Displays the 4:3 aspect ratio compatible with SD television screens, or to help with framing when using 2x anamorphic adapters.

1:1

Displays a 1:1 ratio slightly narrower than 4:3. This square ratio is growing in popularity on social media.

4:5

This vertical aspect ratio is ideal for portraits and viewing on smartphones.

9:16

This vertical aspect ratio is useful for framing social media content.

Custom Frame Guide Ratio

To create your own frame guide ratio for a unique appearance, tap on the ratio displayed between the arrow buttons. On the ‘custom frameguide’ screen tap the backspace button to delete the current ratio, then use the numeric keypad to specify a new ratio. Tap ‘update’ to apply your custom frame guide ratio and return to shooting. The opacity of frame guide overlays can be set using the ‘monitor’ menu settings in the camera’s dashboard.

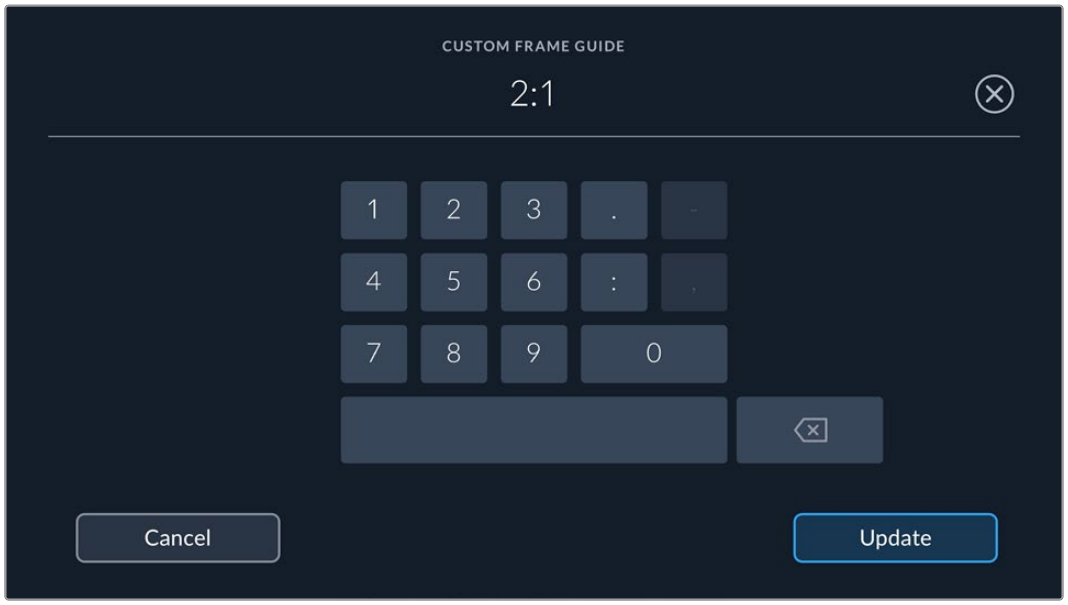

Use the numeric keypad on the ‘custom frame guide’ screen to enter a new frame guide ratio

NOTE For information on enabling frame guides on your camera’s USB and SDI outputs, see the ‘monitor settings’ section in this manual.

Grids

The ‘grids’ setting toggles the appearance of a rule of thirds grid, horizon meter, crosshair or center dot on the LCD touchscreen, as well as setting the overlay that will be visible on all URSA Cine’s outputs.

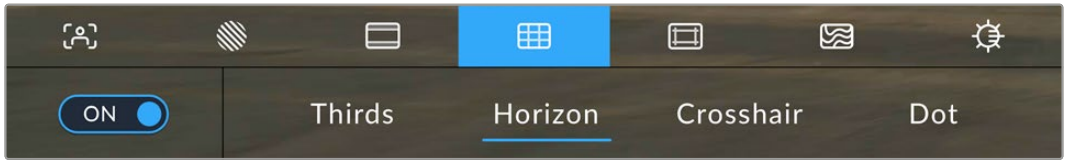

Tap the ‘grids’ icon to access your URSA Cine’s grid settings

Grids and crosshairs are overlays that can help with image composition. When ‘grids’ are enabled, your URSA Cine can show a rule of thirds grid, horizon meter, and crosshair or dot.

To toggle the appearance of grids on your URSA Cine touchscreen, tap the switch icon in the bottom left of the screen while in the ‘frame guides’ tab.

To set which overlay you want to display on all URSA Cine outputs, tap the options at the bottom of the display for ‘thirds’, ‘horizon’, ‘crosshairs’ or ‘dot’.

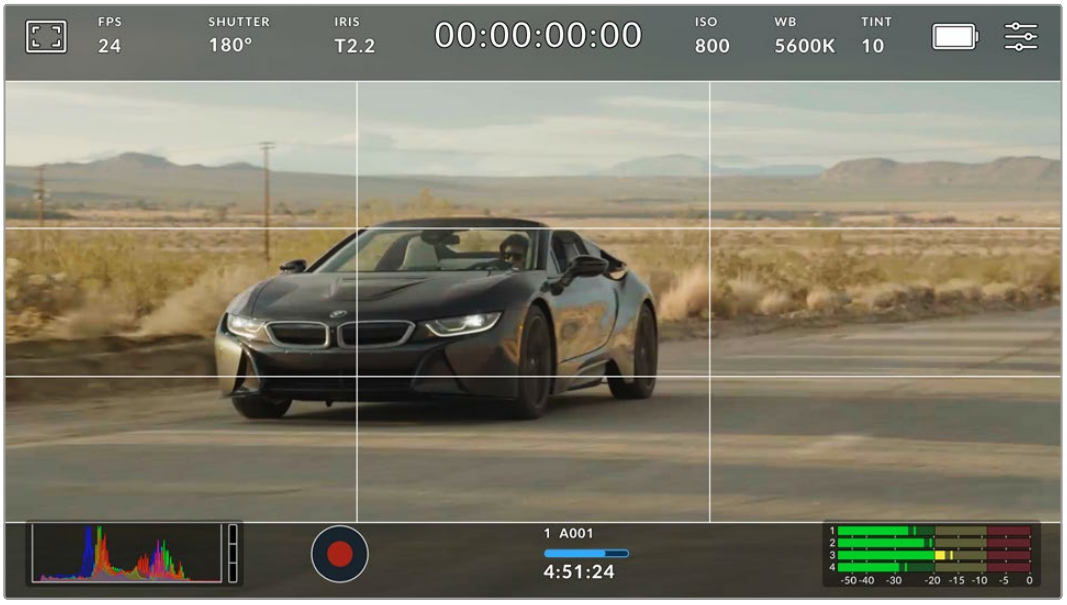

The rule of thirds grid automatically scales to any on screen frame guides

Thirds

The ‘thirds’ setting displays a grid with two vertical and horizontal lines placed in each third of the image. Thirds are an extremely powerful tool to help compose your shots.

For example, the human eye typically looks for action near the points where the lines intersect, so it’s helpful to frame key points of interest in these zones. An actor’s eyeline is commonly framed along the top third of the screen, so you can use the top horizontal third to guide your framing. Thirds are also useful to maintain framing consistency between shots.

Horizon

The horizon meter indicates when your camera is rolled left or right and tilted up or down. This can help you keep the horizon level during handheld shots and balance the camera tilt on a gimbal.

The direction the light gray vertical line moves away from the dark gray crosshair in the middle indicates the direction your camera is rolled. When the camera is tilted down the light gray horizontal line moves up and when the camera is tilted up the light gray horizontal line moves down.

The distance the lines move away from the central crosshair is proportional to the amount of roll or tilt. After you calibrate the camera’s motion sensor, the horizontal and vertical lines appear blue to indicate they are aligned to the roll and tilt axes.

Note that if the camera is tilted straight down for an overhead shot or straight up, the horizon meter takes this into account. If you roll the camera to shoot in portrait orientation, the horizon meter rotates its axes 90 degrees.

This table shows examples of the horizon meter indicating tilt and roll of the camera.

Horizon meter	Description
	Straight and level
	Tilted down and level
	Straight and rolled left
	Tilted up and rolled right

For normal use, calibrate the horizon meter for straight and level operation. If you want to use the horizon meter to help maintain a consistent ‘dutch angle’ or a consistent tilt for a low or high shot, you can calibrate the horizon meter at an incline. For information on how to calibrate the horizon meter, see the ‘motion sensor calibration’ section.

Crosshair

The ‘crosshair’ setting places a crosshair in the center of the frame. Like thirds, the crosshair is a very useful compositional tool, making it easy to frame the subject of a shot in the very center of a frame. This is sometimes used when filming scenes that will be assembled using very fast cuts. Keeping viewers’ eyes focused on the center of a frame can make rapid editing easier to follow.

Dot

The ‘dot’ setting places a dot in the center of the frame. This works in exactly the same way as the ‘crosshair’ setting, albeit with a smaller overlay that you may find less intrusive.

You can enable a combination of ‘thirds’ and ‘crosshairs’ or ‘thirds’ and ‘dot’ by tapping both options in the ‘grids’ menu. ‘Crosshairs’ and ‘dot’ cannot be selected together.

TIP For information on enabling grids on your URSA Cine’s outputs, see the ‘monitor settings’ section in this manual.

Safe Area Guides

The ‘safe area guides’ setting toggles the safe area guides on or off the LCD touchscreen, as well as setting the size of safe area guides for all outputs on your URSA Cine.

Safe areas can be used in broadcast production to ensure that the most important parts of a shot can be seen by viewers. By keeping the most important parts of your shot within a central ‘safe area,’ you can avoid cropping on some televisions, as well as leaving space for a broadcaster to add bugs, news tickers and other overlays along the edges of the screen. Many broadcasters require footage to be submitted within a 90% safe area.

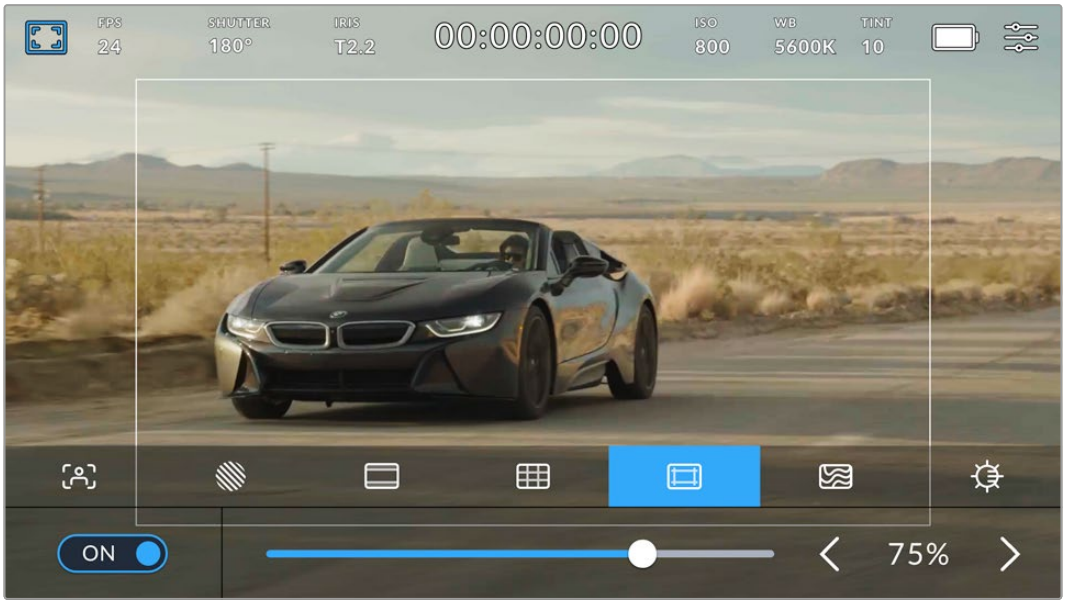

The ‘safe area’ indicator set to 75%

Safe area guides can also be used to assist with framing your shot where you know that the shot will be stabilized in post production, which can crop the edges of the image. They can also be used to indicate a specific crop. The safe area guides also scale to your frame guides, so they will adjust to indicate the chosen percentage of your target frame.

To toggle safe area guides for the LCD touchscreen, tap the switch icon in the bottom left of the screen while in the ‘safe area guides’ tab. To set the level of safe area guides for all outputs on your URSA Cine, tap the left or right arrows on either side of the current numerical value at the bottom of your touchscreen. Alternatively, you can drag the slider left or right.

False Color

The ‘false color’ setting toggles the appearance of false color exposure assistance on the LCD touchscreen.

False color overlays different colors onto your image that represent exposure values for different elements in your image. For example, pink represents optimum exposure for lighter skin tones, while green is a good match to darker skin tones. By monitoring the pink or green false color when recording people, you can maintain consistent exposure for their skin tones.

Similarly, when elements in your image change from yellow to red, that means they are now over exposed.

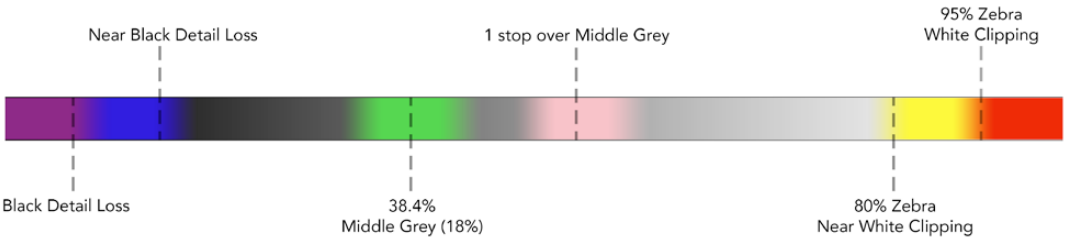

False Color Chart

To toggle false color for the LCD touchscreen, tap the switch icon in the bottom left of the screen while in the ‘false color’ tab.

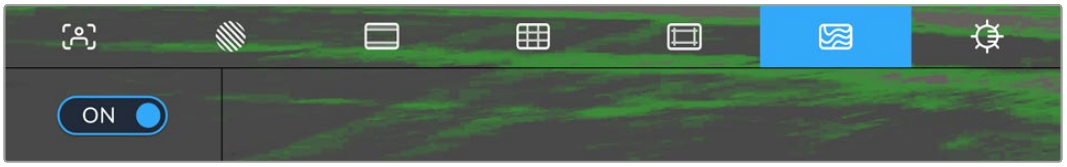

The ‘false color’ exposure assistance tab

Touchscreen Brightness

Adjust the brightness of the touchscreen by dragging the percentage slider right to increase the brightness and left to decrease.

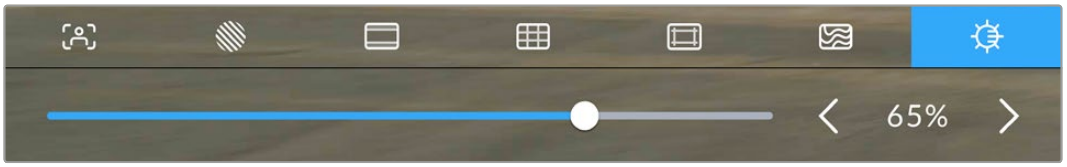

Tap the screen brightness icon to access the touchscreen brightness setting

ND Filter indicator

When adjusting URSA Cine 12K LF’s ND filters, they will be displayed via the indicator in the top left of the LCD touchscreen and any outputs set to show status text. This indicator will remain on in your ‘status text’ when you have an ND filter engaged. When you have it set to the position where there is no ND filter, the ‘clear’ text will disappear after four seconds.

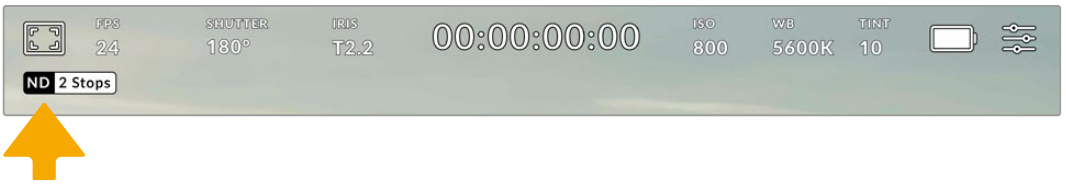

Adjusting your URSA Cine 12K LF’s ND filter setting will reveal the ND filter indicator

NOTE You can adjust the terminology used by the ND filter indicator to reflect the conventions you’re used to. The options are ND number, stops and fractions. You can set your preferred format in your URSA Cine 12K LF’s ‘setup’ menu.

LUT Indicator

The LUT icon will be visible on the LCD, plus video outputs when ‘status text’ is switched on and you have a LUT applied to that output.

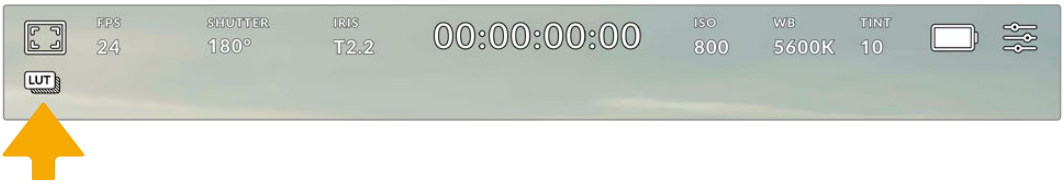

The LUT icon lets you know that you have a LUT applied to the image

Frames Per Second

The ‘FPS’ indicator displays your currently selected frames per second.



Tap your URSA Cine’s frames per second indicator to access frame rate settings

Tapping the ‘FPS’ indicator lets you change your camera’s sensor and project frame rates via a menu at the bottom of your LCD touchscreen.

Project Frame Rate

The project frame rate is URSA Cine’s recording format frame rate and provides a selection of common frame rates used in the film and television industry. This frame rate is normally set to match your playback speed used in your post production workflow.

Your Blackmagic URSA Cine has 8 project frame rate settings including 23.98, 24, 25, 29.97, 30, 50, 59.94 and 60 frames per second.

To adjust your camera’s project frame rate while in the ‘FPS’ menu, tap the left or right arrows next to the current frame rate at the bottom left of your touchscreen. Alternatively, you can drag the slider left or right.



Tap the arrows on either side of the project frame rate or move the slider to make adjustments

TIP The project frame rate also sets the frame rate of the video outputs.

Sensor Frame Rate

The sensor frame rate sets how many actual frames from the sensor are recorded every second. This frame rate will affect how fast or slow your video will play back at your set project frame rate.

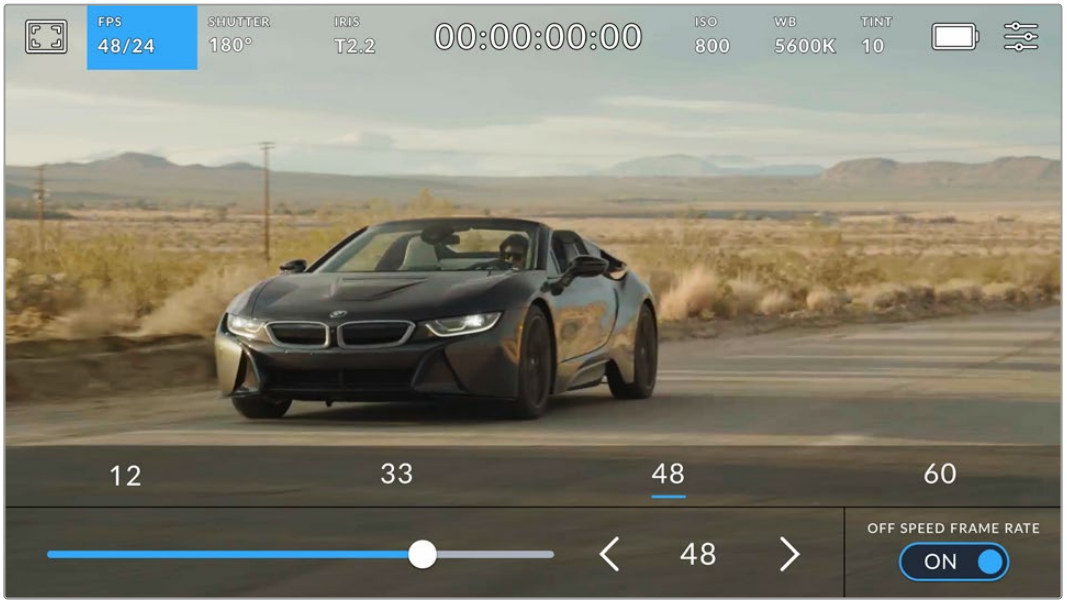

With ‘off speed frame rate’ enabled, tap the arrows on either side of the sensor frame rate, move the slider or tap one of the presets to make adjustments

By default, your URSA Cine’s project and sensor frame rates are matched for a natural playback speed. However, by tapping the ‘off speed frame rate’ switch icon in the bottom right hand side of your camera’s ‘FPS’ menu, you can independently set your sensor frame rate.

To change your sensor frame rate, tap the arrows next to the sensor frame rate indicator in the lower left of your touchscreen. You can also drag the slider left or right to increase or decrease the frame rate. Once you release the slider, the sensor frame rate will be selected. Above the slider, you can select a recommended off speed frame rate that is based on your current project frame rate.

You can create dynamic and interesting speed effects in your clips by varying the sensor frame rate. Setting the sensor frame rate higher than your project frame rate will create slow motion during playback. Alternatively, the lower your sensor frame rate, the faster your clips will appear. The principle is similar to overcranking and undercranking a film camera. Overcranking speeds up the sensor frame rate so you can stretch out moments in time during playback to enhance emotion. Undercranking slows down the sensor frame rate so you can increase the action in fast moving scenes. The creative possibilities are endless and entirely up to you!

For information on the maximum frame rates available for each recording format and codec, refer to the table in the ‘recording’ section of this manual.

NOTE When ‘off speed frame rate’ is selected your URSA Cine’s audio and video are no longer synced. This is true even if you set the same project and sensor frame rate. For this reason, ‘off speed frame rate’ should never be selected if you want to guarantee audio syncing.

Shutter

The ‘Shutter’ indicator displays your shutter angle or shutter speed. By tapping this indicator, you can manually change your URSA Cine’s shutter values or configure shutter priority auto exposure modes. The shutter measurement setting can be used to select whether to display shutter information as ‘shutter angle’ or ‘shutter speed’. See the ‘setup settings’ section in this manual for more information.



Tap your URSA Cine’s shutter indicator to access shutter settings

Shutter angle or shutter speed defines the level of motion blur in your video, and can be used to compensate for varying light conditions. 180 degrees is the optimum shutter angle for capturing satisfying motion blur in most conditions, with the equivalent being a shutter speed of 1/50th of a second. However as lighting conditions change, or the amount of movement in your scene increases, you may decide to adjust accordingly.

For example, 360 degrees is considered ‘wide open’ and allows maximum light onto the sensor. This is useful for low light conditions with subtle movement in your scene. Alternatively, if shooting subjects with a lot of movement, a narrow shutter angle like 90 degrees will provide minimal motion blur for sharper, crisper images. The equivalent shutter speeds compared to shutter angle depends on the frame rate you are using. For example, if you are shooting at 25 frames per second, then 360 degrees will equate to 1/25th, and 90 degrees will equate to 1/100th of a second.

NOTE When shooting under lights, your shutter can affect the visibility of flicker. Your URSA Cine will automatically calculate a flicker free shutter value for your current frame rate. It will display up to three suggested flicker free shutter options at the bottom of the heads up display when adjusting your shutter. These shutter values are affected by mains power frequency in your region. You can set your local power frequency to 50Hz or 60Hz in your URSA Cine’s setup menu. See the ‘setup settings’ section in this manual for more information.

Tapping the ‘shutter’ indicator brings up the suggested shutter values along the bottom of your URSA Cine’s touch screen. If you have auto exposure set to ‘off,’ this screen will show you your currently selected shutter value, as well as the available flicker free shutter values, based on the mains power frequency you have selected in your URSA Cine’s ‘setup’ menu. For more information, see the ‘setup settings’ section in this manual. It’s worth mentioning the characteristics of individual light sources may still cause flicker even when using flicker free values. We recommend always performing a test shoot when not using continuous lights.

To select one of the flicker free shutter values, simply tap on one of the displayed shutter values. Tap the arrows on either side of the current shutter value indicator to cycle through some of the most commonly used values.

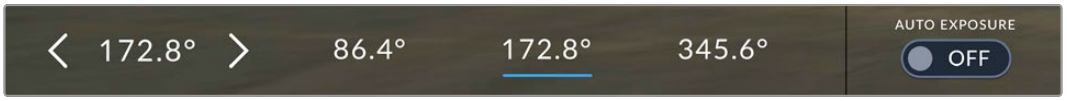

Your URSA Cine will suggest flicker free shutter values based on the mains power frequency you choose in the ‘setup’ menu

If you would like to choose a specific shutter value, you can do so by double tapping the current shutter indicator at the bottom left of your screen. This opens a keypad that allows you to type in any shutter value with up to two decimal places.

If you type in a shutter speed that is incompatible with your current frame rate, the nearest achievable shutter speed will be used.

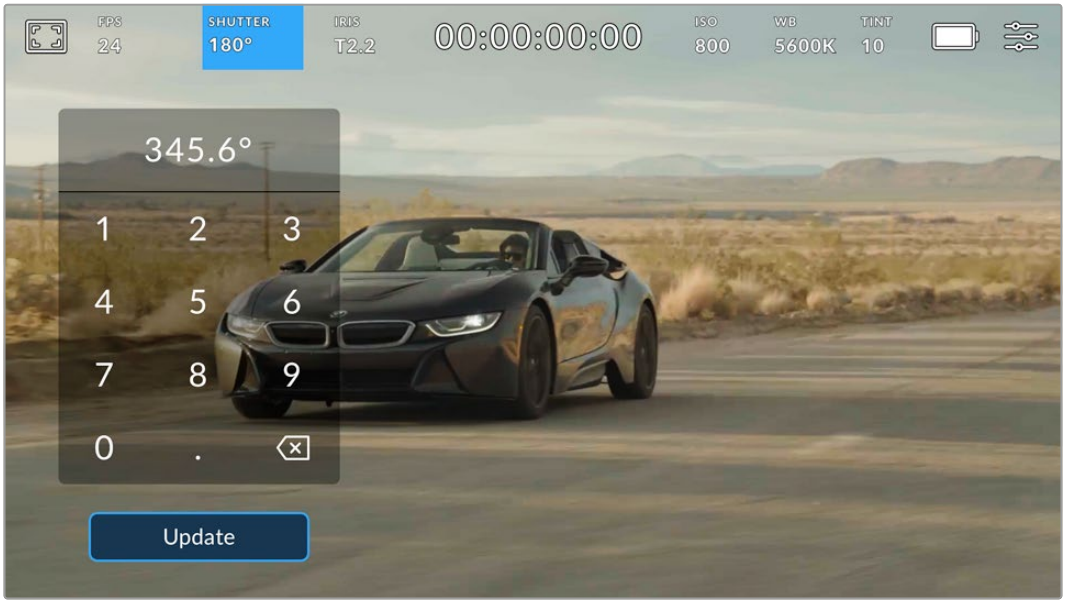

The manual shutter keypad allows you to type in any shutter value you wish

Your URSA Cine has three shutter based auto exposure modes. To select one of these, tap the ‘auto exposure’ button in the far right of the shutter menu.

Shutter

This setting automatically adjusts shutter value to maintain a constant exposure while keeping iris aperture constant. If you want to maintain a fixed depth of field, this is the setting to choose. It’s worth mentioning that the subtle automatic adjustments of the shutter may have an effect on motion blur. It’s also worth keeping an eye out for any flicker that may be introduced from various light fixtures on indoor shoots. URSA Cine’s auto iris feature is not available when the ‘shutter’ auto exposure mode is selected.

Shutter + Iris

Maintains the correct exposure levels by adjusting the shutter, then the aperture. If the maximum or minimum available shutter value is reached and exposure still cannot be maintained, URSA Cine will begin adjusting the aperture to keep exposure constant.

Iris + Shutter

Maintains the correct exposure levels by adjusting the aperture, then the shutter value. If the maximum or minimum available aperture is reached and exposure still cannot be maintained, URSA Cine will begin adjusting the shutter value to keep exposure constant.

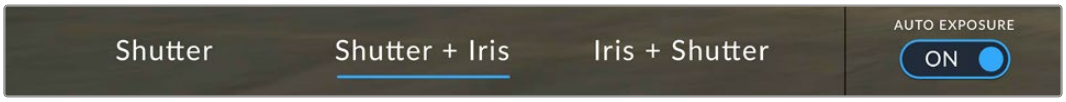

While in the shutter menu, tap 'auto exposure' to access shutter based auto exposure modes

TIP When an auto exposure mode that effects the shutter is enabled, a small 'A' will appear next to the shutter angle indicator at the top of your URSA Cine touchscreen.

Iris

The 'Iris' indicator displays your current lens aperture. By tapping this indicator, you can change the aperture of compatible lenses and configure iris based auto exposure modes.



Tap your URSA Cine's iris indicator to access iris settings

NOTE To adjust the iris from the LCD touchscreen, your URSA Cine must be fitted with a lens that supports changing aperture via the camera. If you are using an EF or PL lens that supports lens control through the pins in the mount, make sure that the lens iris switch on the handgrip is set to 'A' or 'auto.'

Tapping the 'iris' indicator once brings up the iris menu along the bottom of your URSA Cine touchscreen. You'll see your current lens aperture at the far left of this menu. You can change the aperture by tapping the left and right arrows on either side of the current aperture, or moving the slider left or right.

Tapping the 'auto exposure' switch icon at the far right of the iris menu opens the iris auto exposure menu.



While in the 'iris' menu, tap the arrows on either side of the iris indicator or use the slider to adjust iris settings

This gives you the following auto exposure options.

Iris

This setting automatically adjusts the aperture to maintain a constant exposure, while keeping shutter angle constant. This will keep motion blur constant, but may affect your depth of field.

Iris + Shutter

Maintains the correct exposure levels by adjusting the aperture, then the shutter value. If the maximum or minimum available aperture is reached and exposure still cannot be maintained, URSA Cine will begin adjusting the shutter value to keep exposure constant.

Shutter + Iris

Maintains the correct exposure levels by adjusting the shutter, then the aperture. If the maximum or minimum available shutter value is reached and exposure still cannot be maintained, URSA Cine will begin adjusting the aperture to keep exposure constant.

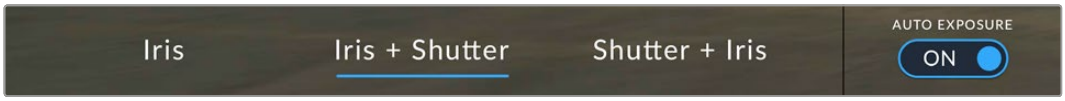

While in the iris menu, tap ‘auto exposure’ to access iris based auto exposure modes

When an auto exposure mode that effects the iris is enabled, a small ‘A’ will appear next to the iris indicator at the top of your URSA Cine touchscreen.

TIP Automatic exposure works smoothly with compatible PL lenses that are designed for video or film production. EF lenses may produce noticeable ‘steps’ in exposure when changing aperture. For this reason, we recommend using only ‘shutter’ auto exposure mode if shooting with EF lenses.

Duration Display

At the top of your URSA Cine’s LCD touchscreen, you’ll see your camera’s duration display.



The duration display will turn red while recording

The duration display provides a timecode counter for checking the duration of your clips and monitoring timecode during recording and playback. The counter displays a time sequence showing Hours:Minutes:Seconds:Frames and will progress through the sequence as you record or play back clips. The timecode will turn red during recording.

The displayed duration of each clip starts from 00:00:00:00 for each clip. The clip duration of the current, or last recorded, clip is displayed on the touchscreen. Time of day timecode is embedded into clips for easier post production.

To see the timecode, simply tap the duration display. Tap the duration display again to return to clip duration.

Additional status indicators that may appear around the duration display include:

TC	Appears to the right of the duration display when showing timecode.
EXT	Appears to the right of the duration display if an external timecode is connected and valid.
INT	Appears to the right of the duration display if the camera is running off an internal timecode after being ‘jam synced’ and disconnected.
PRE	Appears to the right of the duration display when you are viewing 'preset record run' timecode.
REF	Appears when a valid reference source is connected and locked, based on the reference input settings.

ISO

The ‘ISO’ indicator displays your camera’s current ISO setting, or light sensitivity. Tapping this indicator lets you adjust your ISO to suit varying lighting conditions. The ISO range on URSA Cine is from ISO 200 to 3200. The optimum ISO is 800.



Tap your URSA Cine’s ISO indicator to access ISO settings

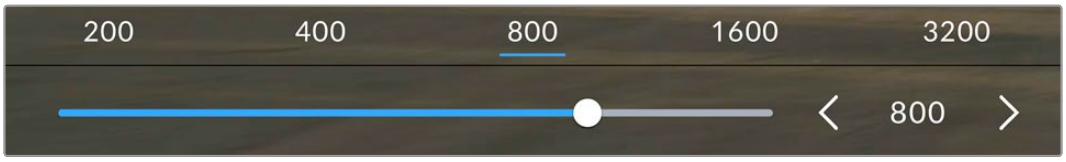

While in the ‘ISO’ menu, your URSA Cine’s ISO settings appear along the bottom of the LCD touchscreen, with a slider below the presets for adjusting your ISO in 1/3 stop increments

Numerical presets provide the option to select an ISO setting in full stop increments by tapping on the number. The slider below the presets allows you to fine tune your ISO setting in between these presets in 1/3 stop increments.

Depending on your situation, you may choose a lower or higher ISO setting. For example, in low light conditions ISO 1600 can be suitable but may introduce some visible noise. In bright conditions ISO 200 can provide richer colors.

White Balance

The ‘WB’ and ‘TINT’ indicators display your camera’s current white balance and tint. Tapping these indicators lets you adjust your camera’s white balance and tint to suit varying lighting conditions.



Tap your URSA Cine’s white balance and tint indicators to access white balance and tint settings

Every light source emits a color. For example, a candle flame emits a warm color, and an overcast sky emits a cool color. White balance settings are used to color balance your image so white stays white by adjusting the mix of orange and blue in your image. For example, when shooting under tungsten lamps that emit a warm, orange light, selecting 3200K adds some blue to the image. This balances the color so white is accurately recorded.

Your URSA Cine comes with white balance presets for a variety of color temperature conditions. These are:

	Bright sunlight	5600K
	Incandescent bulbs	3200K
	Fluorescent bulbs	4000K
	Mixed light	4500K
	Cloud	6500K

You can customize any of these presets by tapping or holding the arrow icons to the left and right of the temperature indicator in the bottom left of the ‘white balance’ menu. Each tap moves the color temperature up or down 50K, but holding the arrow icons down will increase these increments for faster changes. Alternatively, you can move the temperature slider.

To further dial in your image, you can adjust the ‘tint.’ This adjusts the mix of green and magenta in your image. For example, adding some magenta can compensate for the green cast of many fluorescent lights. Many of your URSA Cine’s white balance presets include some tint.



Tapping the white balance and tint indicator on your URSA Cine gives you access to white balance and tint presets plus manual adjustment controls

While in the ‘white balance’ menu, your camera’s current tint setting is shown at the bottom right of the screen. To adjust the tint, simply tap or hold the arrows to the left and right of the tint indicator. The available range is -50 to +50 in one unit increments. Holding down on the arrows speeds up adjustment.

NOTE Customizing the white balance or tint will change your preset to ‘CWB,’ or custom white balance. Custom white balances are persistent; your CWB settings will stay configured between power cycles, and when switching to a preset and back to CWB. This makes it easy to compare a custom white balance to the last preset used.

Auto White Balance

Your URSA Cine can set white balance automatically. Tapping ‘AWB’ will bring up the white balance screen.

When setting white balance automatically, a square will be overlaid on the center of your image. Fill this square with a neutral surface such as a white or gray card and tap ‘update.’ Your URSA Cine will automatically adjust its white balance and tint values to ensure that the average of the white or gray within the white balance square is as neutral as possible. Once updated, this will be set as your camera’s custom white balance.



Use the auto white balance feature with a white or neutral gray surface to automatically set a neutral white balance

Power

Your URSA Cine’s power status is displayed in the top right of the LCD screen. There are four possible indicators:



While using battery power, tapping the power indicator toggles between ‘voltage’ and ‘percentage’ displays

AC	**AC**	Displayed when your URSA Cine is plugged into mains power.
80%	**Percentage**	If you are using a percentage accurate battery and plate combination and have your battery display set to ‘percentage,’ the indicator will display your battery level as a percentage. At 20% charge remaining, the indicator will turn red.
	Battery bars	If your battery display is set to ‘percentage’ but your battery plate and battery combination does not support percentage accurate battery information, your URSA Cine will display a battery icon that drains in 25% increments. At 20% charge remaining, the battery bar will turn red.
31.4V	**Voltage**	When your battery display is set to ‘voltage,’ this indicator will display your battery’s remaining voltage. For 24V batteries, the icon will glow red when the remaining charge decreases to 24.5V and the camera will shut down once your camera reaches 23.9V. When using 12V batteries, this indicator will turn red when your battery drops below 12.5 volts and your URSA Cine will automatically shut down once the battery reaches 11.9 volts.

When using battery power, you can switch between ‘voltage’ and ‘percentage’ or ‘battery bars’ power indicators by tapping the power indicator.

Histogram

At the bottom left of your URSA Cine touchscreen, you’ll see the histogram. The histogram shows the contrast between whites and blacks along a horizontal scale.

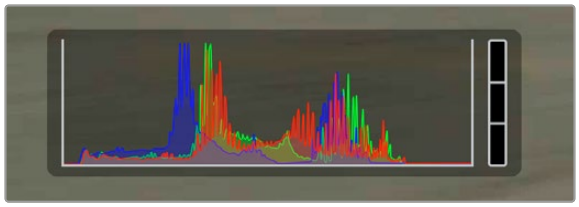

The histogram gives you an indication of the tonal range between shadows and highlights in your clip. It is also a helpful tool for checking the balance of your exposure and to prevent your highlights from clipping.

The left edge of the histogram displays shadows, or blacks, and the far right displays highlights, or whites. When you close or open the lens aperture, you’ll notice the information in the histogram moves to the left or right accordingly. You can use this to check ‘clipping’ in your image shadows and highlights. If the left and right of your edges of the histogram come to an abrupt stop rather than falling off gradually, you may be losing highlight or shadow detail.

NOTE If you don’t see a histogram in the bottom left of your touchscreen, your LCD monitor settings may be set to display ‘codec and resolution.’ See the ‘monitor settings’ section in this manual for more information.

Record Button

Next to the histogram at the bottom of your URSA Cine's touchscreen, you'll see a round gray button. This is the 'record' button. Tap this once to begin recording, and tap it again to stop. While recording, the button and the timecode at the top of your URSA Cine touchscreen will glow red.

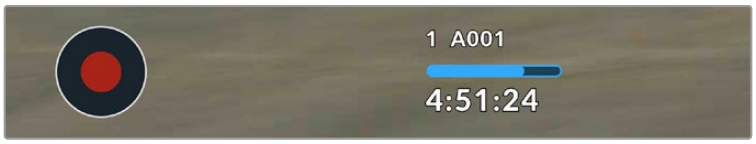

Your URSA Cine's 'record' button, next to the storage indicators at the bottom of the LCD touchscreen



The 'record' button glows red when recording

Apply LUT in File

If you are recording to Blackmagic RAW and have chosen to apply a LUT to your recorded clips in the 'record' settings tab, a blue 'LUT' icon is displayed next to the 'record' button. The LUT indicator is displayed in both standby and record mode.

For more information on recording LUTs with Blackmagic RAW, refer to the 'Record Settings' section later in this manual.



A blue 'LUT' icon is displayed when applying a LUT to your clips

When URSA Cine 12K LF is set to 4K Live SMPTE-2110 storage indicators will be replaced by a volume meter and headset controls.

Storage Indicators

At the bottom of your URSA Cine's touchscreen next to the 'record' button, you'll see the storage indicators.

Record Time Remaining

The storage indicators show how much recording time is left. The time is displayed in hours:minutes:seconds based on your chosen frame rate and codec and is automatically recalculated if you change either of these settings.

When there is approximately 5 minutes remaining in storage, the indicator text will turn red, then blink slowly when there is 3 minutes remaining. When there is less than 30 seconds of recording time remaining, the indicator will blink rapidly.

When storage reaches maximum capacity the indicator will display ‘full’.

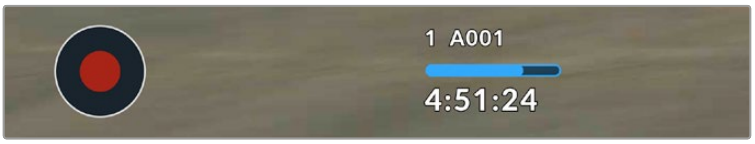

Your URSA Cine’s storage indicator will display the name of the storage and the record time remaining

Media Bar

The media bar icon above the recording time will be either blue, white or red depending on its current status and will display the used space on the storage.

	The blue drive icon indicates the active drive. This is the drive that will be used for recording.
	A white drive icon indicates there is media present, but not active. A solid white icon indicates the media is full.
	The bar will illuminate red during recording.

To switch recording to a different card, press and hold the name or media bar of the card that you wish to record to.

Tapping the storage indicators will open the media pool, tap the media storage icon at the top of the touchscreen to bring up the storage and formatting menu.

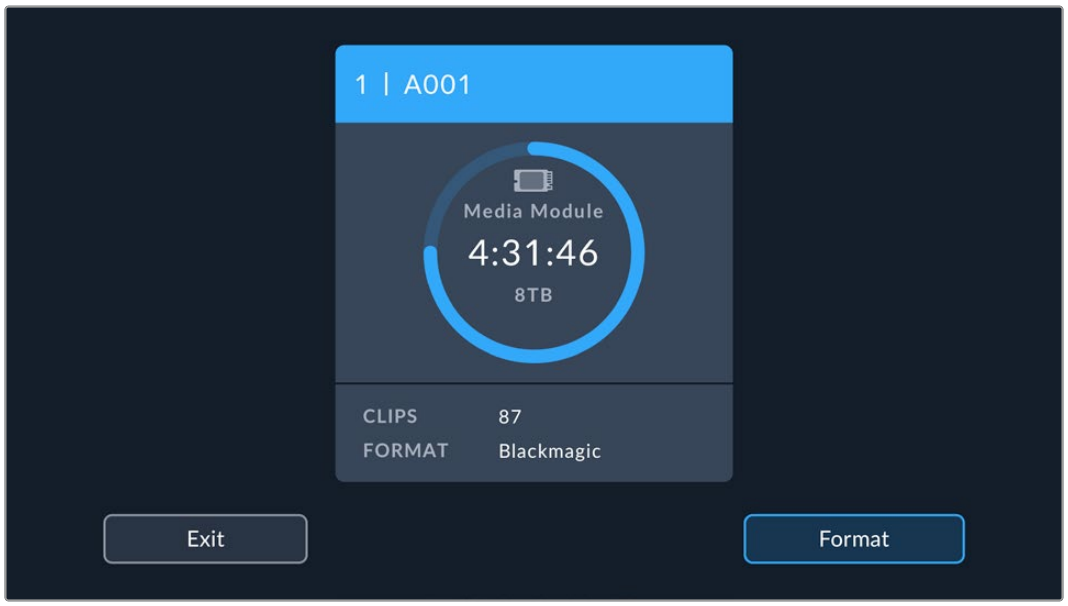

Tap the storage indicators to open the media pool and then tap the storage icon to enter the storage and formatting menu

This menu displays the amount of free space on the media module as well as the module name, remaining record time, total number of clips, and the file format.

Tapping the card in the storage menu sets it as the active card. Your URSA Cine will fill this card first. You can format your media from this menu. For more information on formatting media using URSA Cine, see the ‘Blackmagic media module’ section of this manual.

Talkback Controls

When 4K live SMPTE-2110 is selected in the resolution settings of the record tab the record icon and storage indicators will be replaced by talkback controls. These are a quick way to control your levels when using a headset connected to the 3.5mm TRRS port on the rear of the camera. To adjust the headphone volume drag the volume slider left or right. To ‘push to talk’ and also allow you to adjust the microphone level tap the microphone icon on the right hand side and drag the slider. The push to talk button goes blue when push to talk is enabled, or latched and you will also notice that the headphone icon to the left of the slider changes to a microphone to make it clear which level you are adjusting.

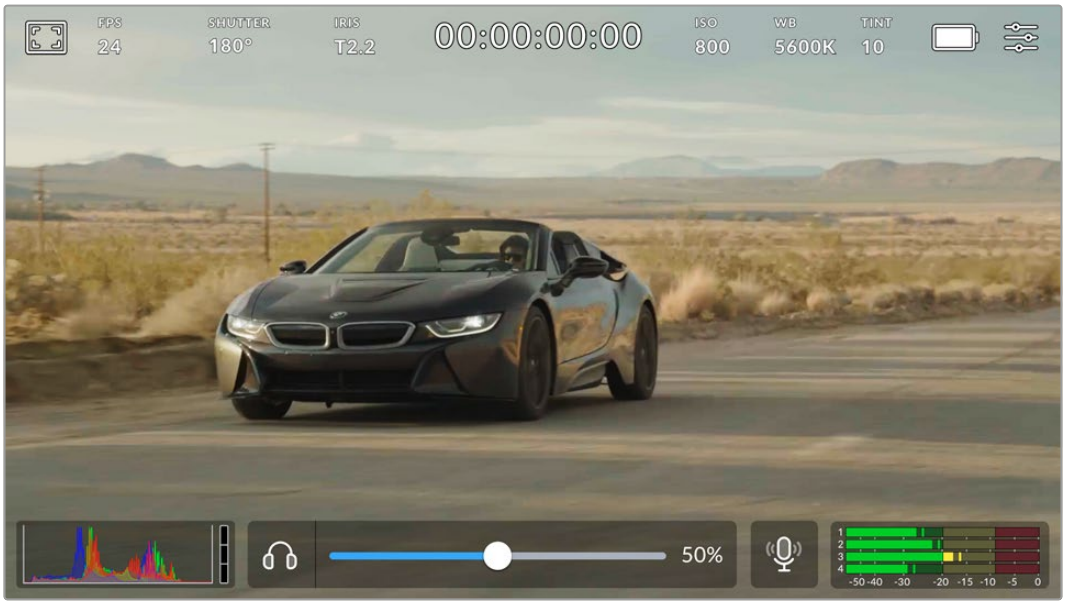

Audio Meter

The peak audio meters display audio levels for channels 1, 2, 3 and 4 when using the internal microphone, or via external audio when connected. You can display PPM or VU meters. To change the meter type, see the ‘setup’ settings later in this manual.

To achieve optimum audio quality, ensure your audio levels do not reach 0 dBFS. This is the maximum level that your camera can record, meaning that any audio that exceeds this level will be clipped, resulting in distortion.

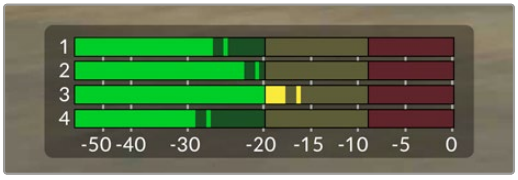

The colored bars on the audio meter represent peak audio levels. Ideally your peak audio levels should fall in the upper end of the green zone. If your peaks enter into the yellow or red zones your audio is in danger of clipping.

Tap the audio meter to bring up volume controls for audio input channels 1, 2, 3 and 4, as well as headset or speaker volume.



Focus Zoom

You can magnify any part of your URSA Cine's preview image by double tapping the LCD touchscreen in the location you would like to zoom. You can move the magnified image by dragging your finger around the touchscreen. This is very helpful when checking focus. To return to the standard magnification, double tap on the touchscreen again.

When you have 'focus zoom' enabled you can also make a pinch to zoom multitouch gesture to adjust the zoom level on the touchscreen. The 'setup' menu on your URSA Cine lets you configure a function button as a 'focus zoom' toggle that behaves like a double tap on the touchscreen. This can be configured to show on the two LCD screens or any display connected to the front USB connection using a function button on the URSA Cine camera body or optional accessories including the Blackmagic PYXIS Monitor, URSA Cine Studio Viewfinder and URSA Cine EVF. For information on how to configure a function button as 'focus zoom', see the 'function button behaves as preset or toggle' section.



While zoomed in, an indicator in the top left of your LCD touchscreen will show which part of the image you are viewing. You can move around the image using the menu wheel or by dragging your finger around the screen.

Full Screen Mode

It can be useful when framing or focusing a shot to temporarily hide your touchscreen's status text and meters. Simply swipe up or down on URSA Cine's touchscreen, or press the 'display' button on the assist station, to hide these. The record indicator, frame guides, grids, focus assist and zebra will remain visible.



Swipe up or down to hide all status indicators on your URSA Cine's LCD touchscreen

Playback Menu

Press the ‘play’ control button to access the playback menu. You can control previously recorded clips with your camera’s control buttons or the LCD touchscreen.

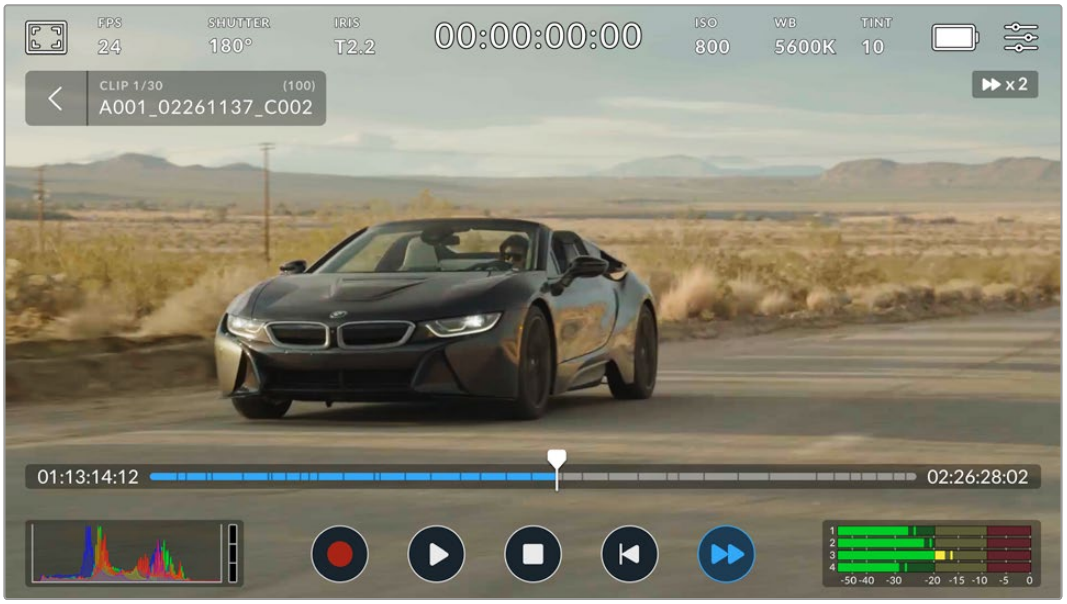

The LCD touchscreen displays a timeline of segments representing all the recorded clips. Each segment in the timeline represents an individual clip. The current clip name and number is shown at the top left of the display and the total number of clips on the card or drive is shown in brackets.

The counter ahead of the timeline displays the current location of the playhead and the counter after the timeline displays the total duration of all the clips.

The playback controls below the timeline let you navigate through the clips.

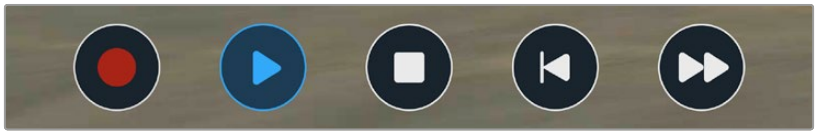

	Tap the ‘record’ button in playback mode to return your camera to standby mode, ready to record.
	Tap the ‘play’ button to view your clips. You are now in ‘playback’ mode.
	Press the ‘stop’ button to stop playback. Pressing the ‘stop’ button a second time will return your camera to standby mode.
	Tap the ‘skip’ back button once to move the playhead to the first frame of the current clip. If the playhead is already on the start of a clip, it will jump to the first frame of the previous clip.

	Tap the ‘skip’ forward button once to move the playhead to the last frame of the current clip. If the playhead is already at the end of a clip, it will jump to the first frame of the next clip.
	Press and hold the ‘skip’ back and ‘skip’ forward buttons to change them to ‘rewind’ and ‘forward’ shuttle buttons. Now you can use them to change the shuttle speed to 2x, 4x, 8x or 16x. To reduce the shuttle speed, simply tap the button in the opposite direction.

The shuttle speed indicator displays the speed and direction of footage being fast forwarded or reversed.

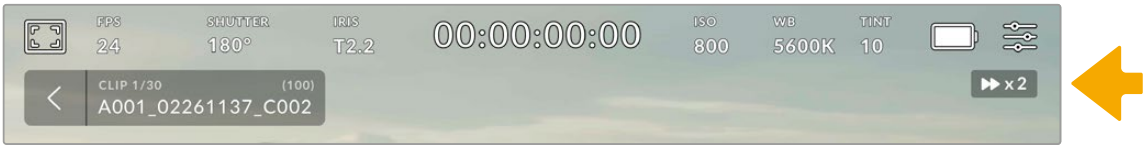

You can change the playback mode from ‘all clips’ to ‘single clip’ in the ‘setup’ menu. In ‘single clip’ mode the last recorded clip is displayed when you press ‘play’.

TIP Swipe up or down on your URSA Cine’s touchscreen to hide status text while playing back footage. Swiping left or right will open the slate where you can mark the current clip ‘good take’ in metadata. Swipe again to close the slate. For more information, see the ‘entering metadata’ section in this manual.

Looping Playback

Tapping the play button more than once enables the ‘loop’ feature. Looping can be useful if you want to continue looping the same clip, or loop all clips on the timeline.

Loop clip		Once your clip is playing, press the ‘play’ button again to set your camera to play the current clip on a continuous loop.
Loop all		Tap ‘play’ again to play all your recorded clips on a continuous loop.
Play		Tap again to return to real time playback.

Settings

Pressing the ‘menu’ control button on your URSA Cine will bring up your camera’s dashboard. This is a tabbed menu containing the settings not available from your camera’s head up display. Settings are divided by function into ‘record,’ ‘monitor,’ ‘audio,’ ‘setup,’ ‘presets,’ and ‘LUTS’ tabs. Some tabs, such as ‘record,’ ‘monitor,’ and ‘setup’ contain multiple pages. You can cycle between these pages by tapping the arrows on the left and right of the settings screen, or swiping left or right as you would on a smartphone or tablet.

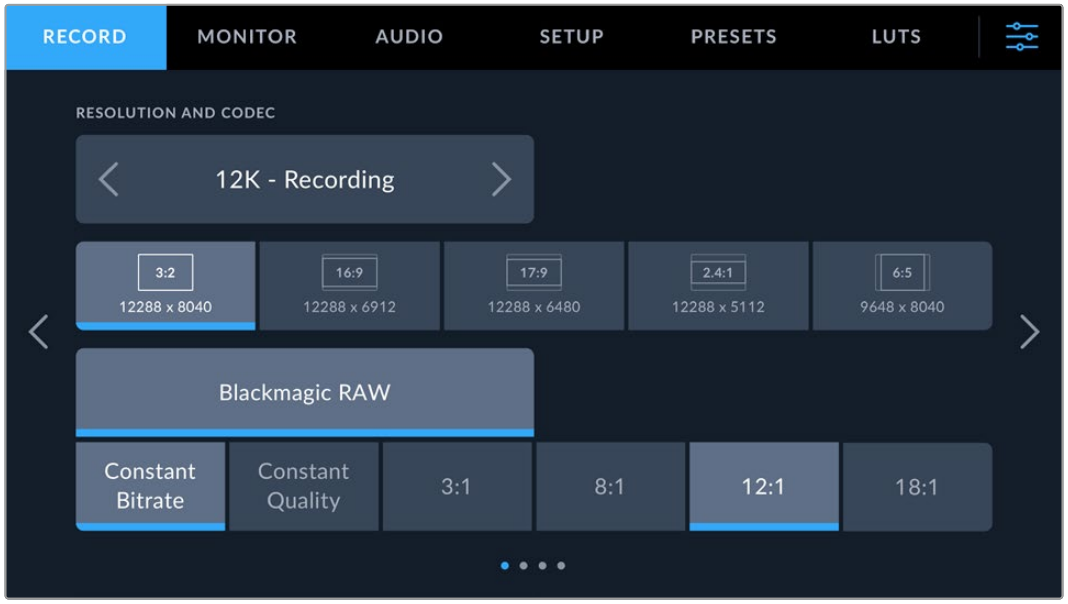

Record Settings

The ‘record’ tab allows you to set your video standard, codec, and resolution. This menu has four pages, which you can cycle through by tapping the arrows at the edge of your camera’s touchscreen, or swiping left or right.

Record Settings 1

The first page of the ‘record’ settings tab contains the following settings.

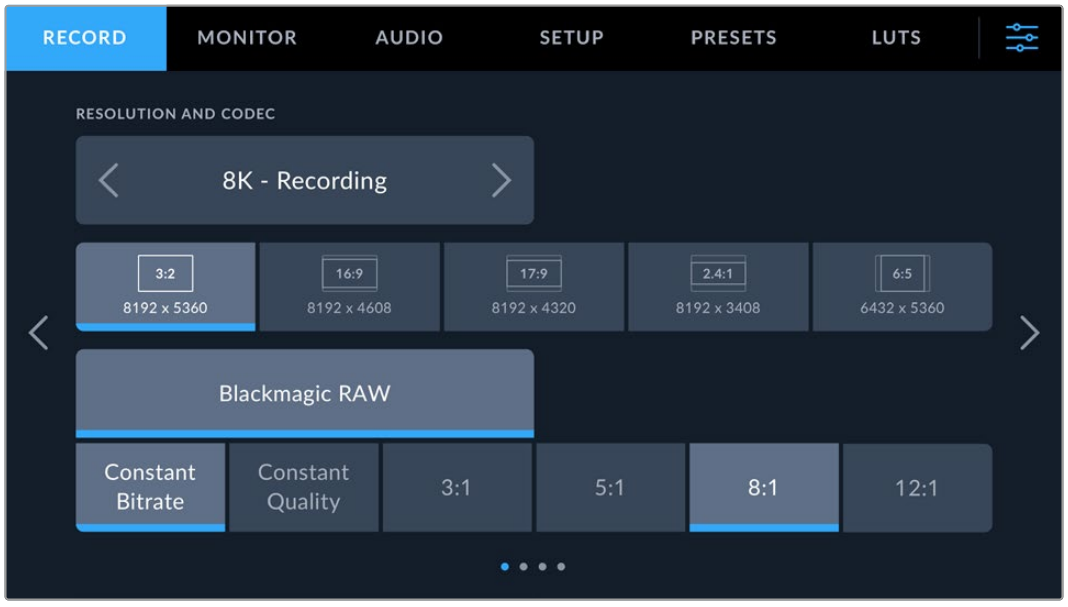

Resolution and Codec

The top setting is for choosing your recording resolution type, while the bottom row of buttons offers sensor area choices with various pixel dimensions. For example, on URSA Cine 12K LF you can choose to record 12K resolution using 3:2 open gate at 12288 x 8040 pixels, 16:9 at 12288 x 6912 pixels, 17:9 at 12288 x 6490 pixels and more.

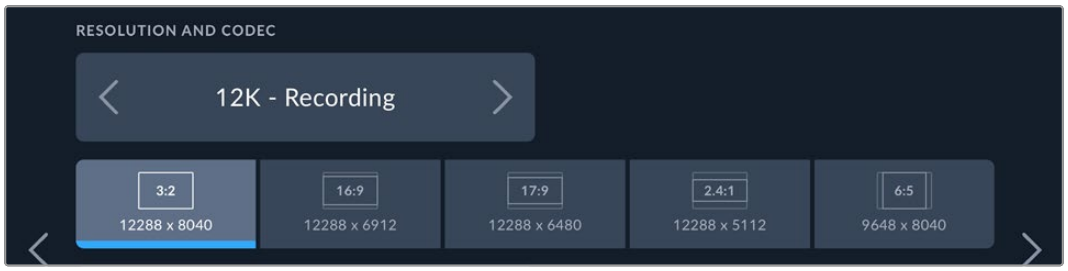

A table is provided at the end of this section showing all the different sensor area options and a description for each.

Choose a Blackmagic RAW codec setting to suit the project you are working on. The options are divided between four ‘constant bitrate’ and ‘constant quality’ settings. You can learn more about Blackmagic RAW and the different compression settings in the ‘Blackmagic RAW’ section earlier in this manual.



Blackmagic RAW ‘constant bitrate’ and ‘constant quality’ options

TIP The amount of video you can record on your storage media on URSA Cine will increase when choosing codecs that utilize higher compression. Refer to the ‘record duration table’ in the ‘recording’ section for more information.

URSA Cine 17K 65		URSA Cine 12K	
2.2:1 50.81x23.32mm 55.90mm diagonal	Full width and height open gate setting using the complete 17K 65mm sensor area. Available in 17K, 8K and 4K recording.		
2:1 46.77x23.32mm 52.26mm diagonal	Full height of the URSA Cine 17K 65mm sensor with a slight edge crop to achieve 2:1 aspect ratio. Available in 17K, 8K and 4K recording.		
3:2 35.64x23.32mm 42.59mm diagonal	Maintains the full sensor height while cropping the horizontal area of the sensor. Available in 12K, 8K and 4K recording.	3:2 35.64x23.32mm 42.59mm diagonal	Full width and height open gate setting using the complete sensor area of URSA Cine 12K. Available in 12K, 8K and 4K recording.

URSA Cine 17K 65		URSA Cine 12K	
16:9 41.48x23.32mm 47.59mm diagonal	Conforms to the common 16:9 television broadcast standard. The 17K 16:9 record option maintains the full sensor height while cropping the horizontal area.	16:9 35.64x20.04mm 40.89mm diagonal	Maintains the full sensor width while cropping the vertical area to conform to the common 16:9 television broadcast standard. Available in 12K, 8K and 4K recording.
16:9 35.64x20.04mm 40.89mm diagonal	The 12K, 8K and 4K record options match the 16:9 sensor area from the 12K LF image sensor.		
17:9 44.54x23.32mm 50.28mm diagonal	The 17K 17:9 record option maintains the full sensor height while cropping the horizontal area with a DCI aspect ratio.	17:9 35.64x18.79mm 40.28mm diagonal	Maintains the full sensor width while cropping the vertical area of the sensor to conform to the common 4K and 8K DCI standards. Available in 12K, 8K and 4K recording.
17:9 35.64x18.79mm 40.28mm diagonal	The 17:9 12K, 8K and 4K record options match the 17:9 sensor area used on URSA Cine 12K LF.		
2.4:1 35.64x14.82mm 38.60mm diagonal	The 17K record mode maintains the full sensor width while cropping the horizontal area of the sensor to conform to the common 2.4:1 widescreen standard when using spherical lenses. When using spherical lenses, cropping to fit the 2.4:1 widescreen standard lets you record at even higher frame rates.	2.4:1 35.64x14.82mm 38.60mm diagonal	Maintains the full sensor width while cropping the vertical area of the sensor to conform to the common 2.4:1 widescreen standard when using spherical lenses. When using spherical lenses, cropping to fit the 2.4:1 widescreen standard lets you record at even higher frame rates. Available in 12K, 8K and 4K recording.
2.4:1 35.64x14.82mm 38.60mm diagonal	This format is mainly used for anamorphic shooting and uses the full image sensor height. Available in 12K, 8K and 4K modes.		
6:5 9648 x 8040	This format is mainly used for anamorphic shooting and uses the full image sensor height.	6:5 27.98x23.32mm 36.42mm diagonal	Maintains the full sensor height and crops the horizontal area to optimize shooting with anamorphic lenses that have a 2x squeeze. Available in 12K and 8K recording.

To use your URSA Cine 12K camera for live production, select ‘4K Live SMPTE-2110’ and then press the menu button. The camera will reset enabling SMPTE-2110 over 10G Ethernet when working with ATEM 4 M/E Constellation IP model switchers with tally, talkback and camera control returning via the same 10G Ethernet connection.

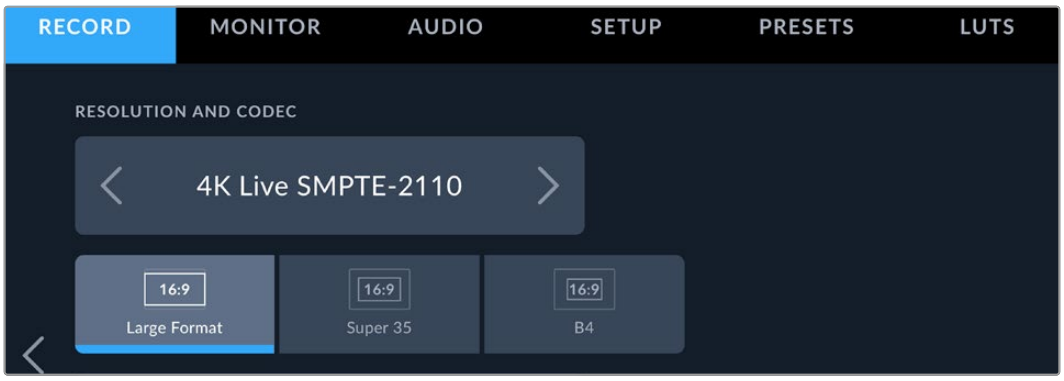

For more information on using URSA Cine for live production, including connecting to ATEM IP or SDI model switchers, refer to the section ‘URSA Cine 12K for Live Production’ later in this manual.

Record Settings 2

The second page of the ‘record’ settings tab contains settings based on whether you are using an URSA Cine 17K or URSA Cine 12K models.

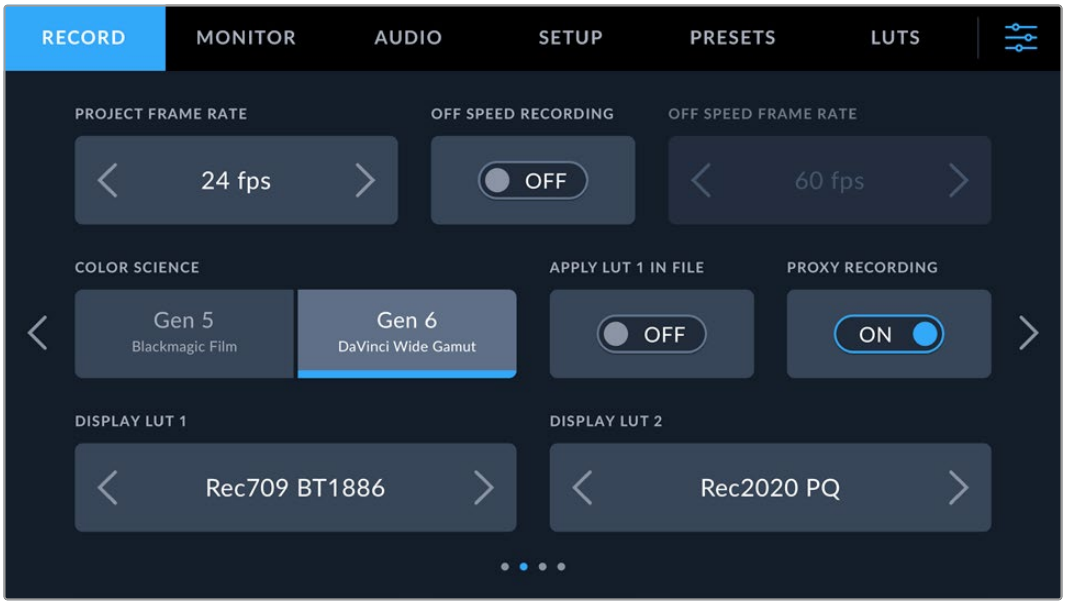

Record settings on URSA Cine 12K

Project Frame Rate

The project frame rate is URSA Cine’s video standard frame rate and provides a selection of common frame rates used in the film and television industry. For example, Ultra HD at 29.97 frames per second. This frame rate is normally set to match your playback speed and audio sync used in your post production workflow and delivery requirements.

Your Blackmagic URSA Cine has 8 project frame rate settings including 23.98, 24, 25, 29.97, 30, 50, 59.94, and 60 frames per second. URSA Cine 12K LF includes a ninth project frame rate setting of 90 frames per second for recording Apple Immersive Video content alongside URSA Cine Immersive

NOTE Your camera’s project frame rate has a large impact on the ‘look’ of footage. In broadcast environments, frame rates are typically set to 50, 59.94, or 60 frames per second. These relatively high frame rates are great for capturing smooth motion and eliminate or minimize stutter while panning.

Lower frame rates, such as 24 or 25 frames per second, are typically used for cinema production. These have a distinct filmic ‘look,’ but require much slower camera movement to avoid stutter.

Off Speed Recording

By default, your URSA Cine’s project and sensor frame rates are matched for a natural playback speed. However, by tapping the ‘off speed recording’ switch icon you can set your sensor frame rate independently.

Off Speed Frame Rate

With ‘off speed frame rate’ enabled, tap the arrows next to the ‘off speed frame rate’ indicator to set your URSA Cine’s sensor frame rate.

The sensor frame rate sets how many actual frames from the sensor are recorded every second. This frame rate will affect how fast or slow your video will play back at your set project frame rate.

For more information on off speed frame rates, see the ‘frames per second’ section in the ‘touchscreen controls’ section of this manual.

NOTE For information on the maximum frame rates available for each recording format and codec, refer to the ‘maximum sensor frame rates’ table in the ‘recording’ section of this manual.

Color Science

The color science setting on URSA Cine 12K lets you choose which version of color science you would prefer to use for monitoring and recording. Gen 6 has improved color accuracy, improved LUT’s for HDR and SDR workflows and offers a faster workflow in post production by using DaVinci Wide Gamut Intermediate as your starting point. The generation 5 color science setting is still available to customers for backwards compatablity and matching with other cameras and legacy products.

Different display LUTs will be available depending on the generation of color science selected.

Apply LUT in File

If you are applying a LUT to any of the outputs from your URSA Cine, the selected LUT will be embedded into the Blackmagic RAW file you are recording.

This means the LUT will be saved in the header of the file and can easily be applied to the clip in post production without needing to handle a separate file. When the ‘apply LUT in file’ switch is set to ‘on’ in the record menu, this clip will open in Blackmagic RAW Player and DaVinci Resolve with the chosen LUT already applied to it. The LUT can then be easily toggled ‘on’ or ‘off’ but will always travel with the Blackmagic RAW file as it is written into the clip itself.

DaVinci Resolve also has an ‘apply LUT’ switch in the RAW settings palette for enabling or disabling the 3D LUT in the Blackmagic RAW file. The ‘apply LUT’ setting in DaVinci Resolve is the same setting as in the camera. This means that when shooting you can direct the colorist to use the LUT by setting it in the camera, but they can switch it off easily in DaVinci Resolve by setting ‘apply LUT’ to ‘off’.

Proxy Recording

This setting is set to ‘on’ by default so your camera records proxy files simultaneously while recording Blackmagic RAW clips. If you want to record clips without proxies you can easily turn the feature off by tapping on the toggle switch and setting the feature to ‘off’.

Dynamic Range

Adjust the ‘dynamic range’ setting by tapping the dynamic range icons. Blackmagic URSA Cine 17K has three dynamic range settings:

Film	The ‘film’ setting shoots video using a log curve that allows you to maintain the greatest dynamic range and maximizes the information in your video signal to help you get the most out of color grading software, such as DaVinci Resolve.
Extended Video	The ‘extended video’ setting is based on Blackmagic Wide Gamut with contrast and saturation applied. The most notable differences to the video mode come from the magenta/green axis having less saturation which is more typical of print film.
Video	The ‘video’ setting is the best choice for recording to a high contrast, saturated look suitable for direct delivery or minimal post processing. Video uses Rec.709 primaries with a pleasing roll off in the highlights. This is a good option if you want an accurate starting point that still has a pleasing gamma curve with room for grading if needed.

If you are using ‘video’ or ‘extended video’ dynamic range, make sure the display LUT is not enabled on any of the camera’s outputs or LCDs.

If the display LUT is enabled, the LUT indicator will be visible on the HUD and the image appears to have more saturation and contrast than intended. To check your display LUTs setting, see the ‘monitor’ settings later in this manual.

If you are using ‘video’ or ‘extended video’ dynamic range, make sure the display LUT is not enabled on any of the camera’s outputs or LCDs.

If the display LUT is enabled, the LUT indicator will be visible on the HUD and the image appears to have more saturation and contrast than intended. To check your display LUTs setting, see the ‘monitor’ settings later in this manual.

Display LUT

Select the display LUT used for recording and monitoring on URSA Cine 12K. This includes LUTs for video recording and live broadcast. Custom and additional LUTs can be added using the LUTs tab.

Your URSA Cine can apply 2 different display LUTs to any output to approximate the look of color graded footage, applying a transformation from DaVinci Wide Gamut when working with Gen 6 color science and Blackmagic Film when working with Gen 5 color science.

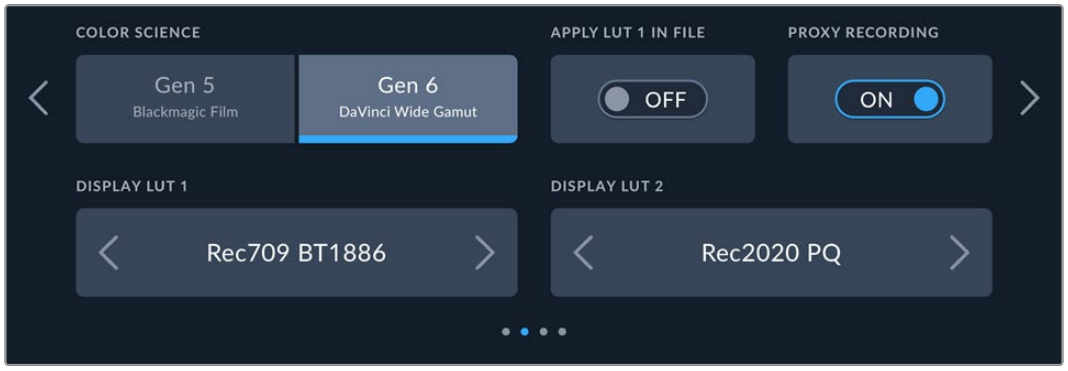

Use the arrows to select your LUT. Use the 2nd page of the monitor settings to independently apply either display LUT 1 or display LUT 2 to your LCD 1, SDI A, SDI B, LCD 2 or front USB output. For more information on using LUTs with URSA Cine 17K along with loading and using LUTs, see the ‘LUTs’ section of this manual.

Record Settings 3

The third page of the ‘record’ settings tab contains the following settings.

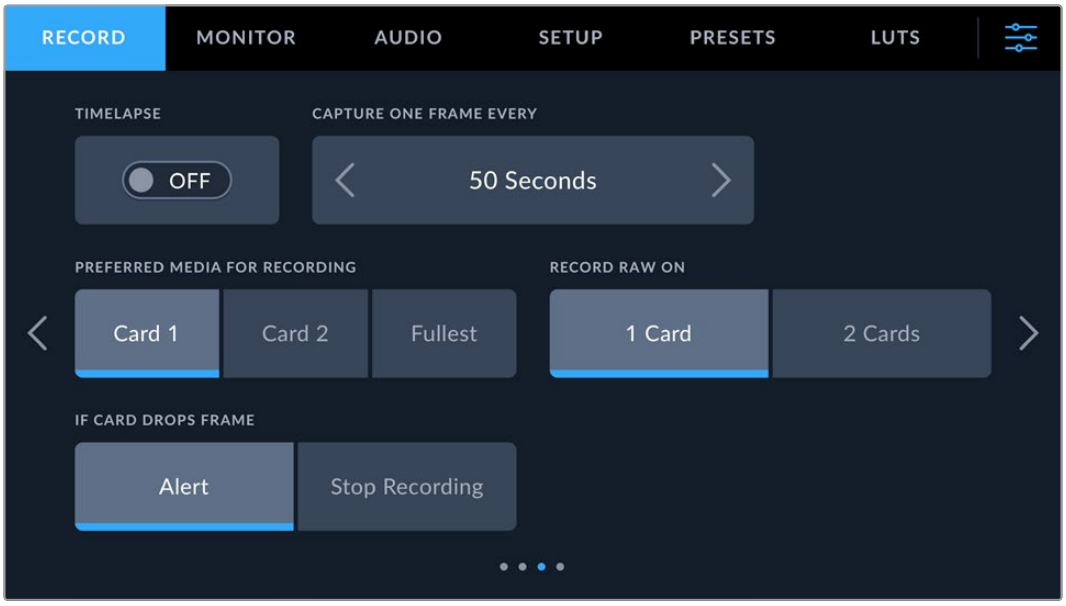

Timelapse

This setting activates the time lapse feature to automatically record a still frame at the following intervals:

Frames	2 – 10
Seconds	1 – 10, 20, 30, 40, 50
Minutes	1 – 10

For example, you can set the camera to record a still frame every 10 frames, 5 seconds, 30 seconds, 5 minutes etc.

The time lapse feature offers many creative options. For example, setting a 2 frame time lapse interval will give your recorded video a high speed effect when played back.

The standard of each still frame is based on your recording standard, so if you set the camera to record Ultra HD using Blackmagic RAW constant quality Q0, the time lapse setting will maintain this standard. The frame rate will be based on your project frame rate. This is so your time lapse footage can be easily incorporated into your post production workflow.

When you record footage in timelapse mode, the timecode counter updates when a frame of video is recorded.

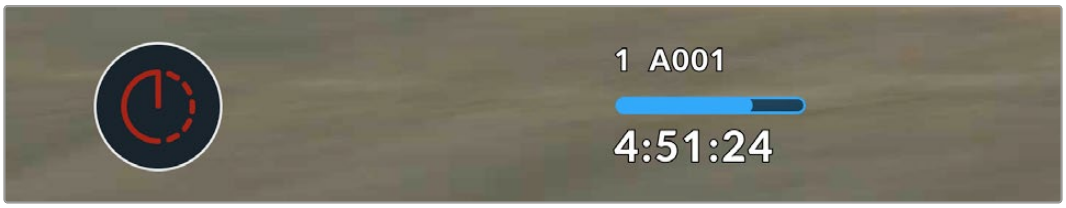

Your URSA Cine will indicate it is in time lapse mode with an icon over the ‘record’ button

Preferred Media for Recording

Use this setting to select which storage card your URSA Cine will record to first when more than one storage slot is in use. The options are ‘card 1’, ‘card 2’, and ‘fullest’. Picking either ‘card 1’ or ‘card 2,’ is a matter of personal preference, but using either consistently will let you know which card to swap out first as your storage fills up. ‘Fullest card’ can help group files chronologically when shooting a single camera project. The ‘fullest card’ setting is based on the percentage that your storage cards are filled, rather than their sizes or the amount of data used.

The setting you choose is applied when a CFexpress card is inserted. You can override this setting at any time by entering the storage manager and setting a different card as ‘active.’ It’s important to note, however, that ejecting and reinserting cards will revert to the current ‘preferred media for recording’ setting.

Record RAW On

Recording Blackmagic RAW on two cards lets you record extremely high resolution clips at high frame rates with lower levels of compression. Insert a pair of CFexpress cards and choose the ‘2 cards’ option. Since this relies on striping across both cards sequentially, the data rate of the slowest card will be the limiting factor, so you are advised to use two cards of the same or similar specification.

When you use the ‘2 cards’ option, the speed limit is twice the data rate of the slowest card in the striped array.

Merging Files for Editing

Copy the .BRAW and .BRAW2 files from both memory cards into the same folder on your computer and DaVinci Resolve will bring them in as a single, merged clip when you import them into your media pool. If the .BRAW and .BRAW2 files are separated, the clips can play independently at half the frame rate. To play back a .BRAW2 file independently, change the file extension from .BRAW2 to .BRAW.

TIP You can use the Media Management tool in DaVinci Resolve to combine a .BRAW and .BRAW2 file into a single, independent clip.

Combining .BRAW files heps to make sure they can’t be separated. This can be useful for media management or if you are sending files to another editor.

For more information, refer to the ‘using media management’ section in the DaVinci Resolve manual.

If Card Drops Frame

Use this setting to configure your URSA Cine’s behavior when dropped frames are detected. When set to ‘alert’ the dropped frame indicator will be displayed on the LCD touchscreen, and recording will continue with dropped frames. When set to ‘stop recording’ your camera will stop recording when dropped frames are detected. This can prevent you wasting time shooting unusable footage if you don’t spot the dropped frames indicator.

File Naming Convention

Clips are recorded in the Blackmagic RAW codec depending upon which recording standard you have chosen.

The table below shows an example of the file naming convention:

A001_08151512_C001.braw	**Blackmagic RAW clip Filename**
A001_08151512_C001.braw	Camera index
A**001**_08151512_C001.braw	Reel Number
A001_**08**151512_C001.braw	Month
A001_08**15**1512_C001.braw	Day
A001_0815**15**12_C001.braw	Hour
A001_081515**12**_C001.braw	Minute
A001_08151512_**C001**.braw	Clip Number

Still image files captured using the still button will follow the file naming convention for video clips, however the filename will have an ‘S001’ representing the ‘still number’ as the last four digits of the filename in place of the clip number. For more information, refer to the ‘status LCD controls’ section in this manual.

NOTE When recording Blackmagic RAW clips on URSA Cine, your camera also records simultaneous proxy files. These have exactly the same file name as the Blackmagic RAW clip but are saved in a ‘Proxy’ folder and have an .mp4 extension.

Record Settings 4

The fourth page of the ‘record’ settings tab contains settings for the pre-record feature.

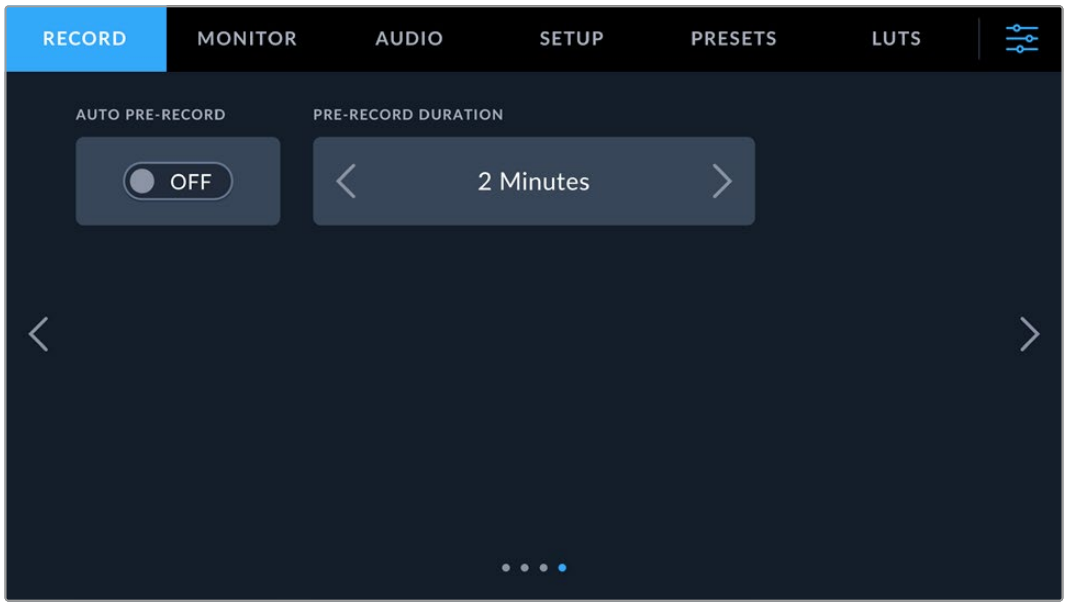

Pre-record

Pre-record lets you continuosly record video for a set duration prior to pressing the record button. For example, if the pre-record duration is set to 10 seconds, your camera will record to your media, then when you press record the clip will start from 10 seconds prior to when you pressed record. This helpful feature lets you make sure you don't miss an important moment, such as during a news event or when shooting wildlife cinematography.

There are two different ways to turn pre-record on. You can set the camera to use pre-record on a clip by clip basis, or turn auto pre-record on so the camera is always recording.

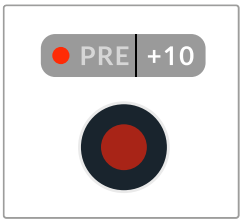

Clip by Clip Pre-record

Hold the record button down for 2 seconds. You will notice an extra detail on the touchscreen above the record icon displaying a flashing mini record icon and a small duration counter increasing until it reaches the set pre-record duration. This means the camera is now in pre-record mode and is filling its pre-record cache to your media. If you start record at this point the clip will include the pre-record duration shown that preceded the start of the clip.

It's important to mention when using pre-record clip by clip, the feature will turn off after you finish recording a clip. To enable pre-record again, hold down any of your camera's record buttons for 2 seconds. If you want to turn pre-record off at any point, simply hold down the record button again for 2 seconds.

The second mode of operation for pre-record is 'auto pre-record' which can be turned on in the record menu.

NOTE Any function buttons assigned as record buttons, including your camera, or accessories like Blackmagic Zoom Demand or lenses with buttons assigned as record buttons will follow the same function. Simply hold the button down for 2 seconds to start pre-record. Just remember to press the record button when you want the clip to start as you normally would!

Auto Pre-record

Enable this setting if you want to make sure pre-record is always on. This means even after pressing the record button to stop recording at the end of a clip, your camera will continue recording to the pre-record cache at the set pre-record duration, ready for the next one. It's important to note when pre-record is set to auto, your camera will be recording all the time. It's worth keeping this in mind with regards to wear on your media. Once enabled, auto pre-record can be turned off at any time by holding the record button down for 2 seconds.

Pre-record Duration

Set the duration of the pre-record. The duration can be set from 5 seconds to 10 minutes. Tap on the left and right arrows to make your selection. The following durations are available:

Seconds	Minutes
5 seconds	1 minute
10 seconds	2 minutes
20 seconds	5 minutes
30 seconds	10 minutes

Monitor Settings

The ‘monitor’ tab lets you adjust status text, overlays, and other monitoring options for your URSA Cine’s LCD touchscreens, SDI outputs and the EVF USB output. Options are arranged between the SDI, LCD and front USB outputs. Each of these menus have five pages of options, which you can cycle through by tapping the arrows at the edge of your camera’s touchscreen, or swiping left or right.

Monitor Settings 1

The first page of ‘monitor’ tab contains identical settings for each output. For example, you can set ‘zebra’ on for the LCD touchscreen, but off for the SDI outputs.

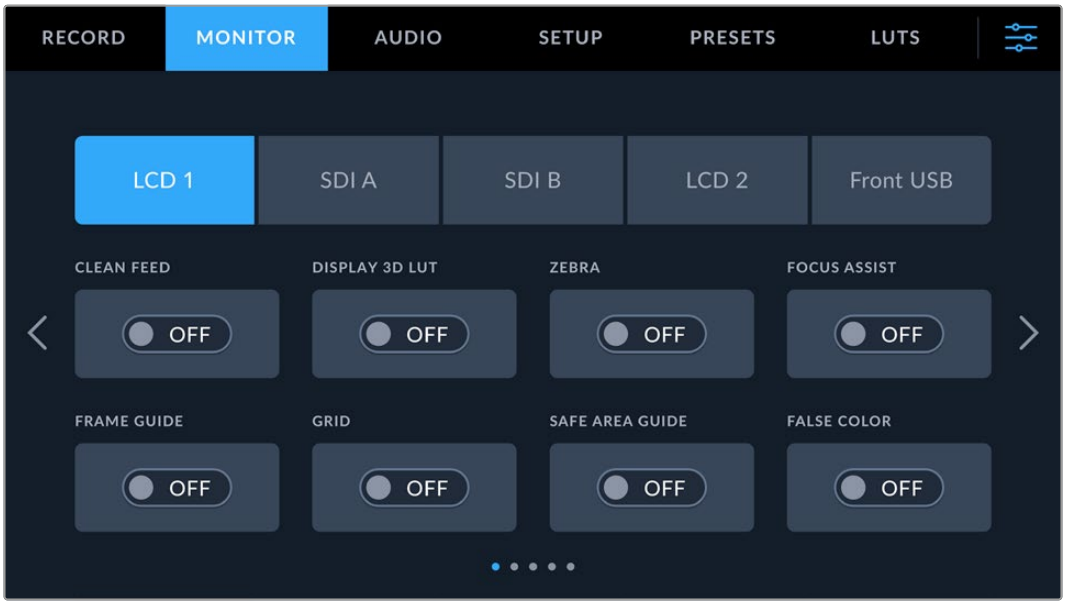

Clean Feed

Tap the ‘clean feed’ switch in the outputs menu to disable all status text and overlays for that output, except the record tally indicator.



Your URSA Cine LCD touchscreens will still display a record tally in clean feed mode

NOTE LUTs will still be applied to outputs with ‘clean feed’ enabled. To disable LUTs, disable the ‘display LUT’ switch in the ‘monitor’ menu for that output.

Display 3D LUT

Your URSA Cine can apply 3D LUTs to any output to approximate the look of color graded footage.

If your URSA Cine has a 3D LUT active, use this setting to independently apply that LUT to your camera’s outputs.

NOTE For more information on loading and using 3D LUTs, see the ‘LUTS’ section of this manual.

Zebra

Tap the ‘zebra’ switch in each respective output menu to enable zebra guides for those outputs. For more information on zebra guides and setting zebra levels, see the ‘touchscreen controls’ section in this manual.

Focus Assist

Tap the ‘focus assist’ switch in each respective output menu to enable focus assist for those outputs. For more information on focus assist and setting focus assist levels, see the ‘touchscreen controls’ section in this manual.

Frame Guide

Tap the ‘frame guide’ switch in each respective output menu to enable the frame guide for those outputs. For more information on frame guides and choosing different guides, see the ‘touchscreen controls’ section in this manual.

Grid

Tap the ‘grid’ switch in each respective output menu to enable a rule of thirds grid for those outputs. For more information on the rule of thirds grid, see the ‘touchscreen controls’ section in this manual.

Safe Area Guide

Tap the ‘safe area’ switch in each respective output menu to enable safe area overlay for those outputs.

For more information on safe area guides, and setting the level of safe area guides, see the ‘touchscreen controls’ section in this manual.

False Color

Tap the ‘false color’ switch in each respective output menu to enable false color exposure assistance for those outputs.

For more information on false color, see the ‘touchscreen controls’ section in this manual.

Monitor Settings 2

The second page of your URSA Cine's 'monitor' tab contains settings that vary depending on the selected output.

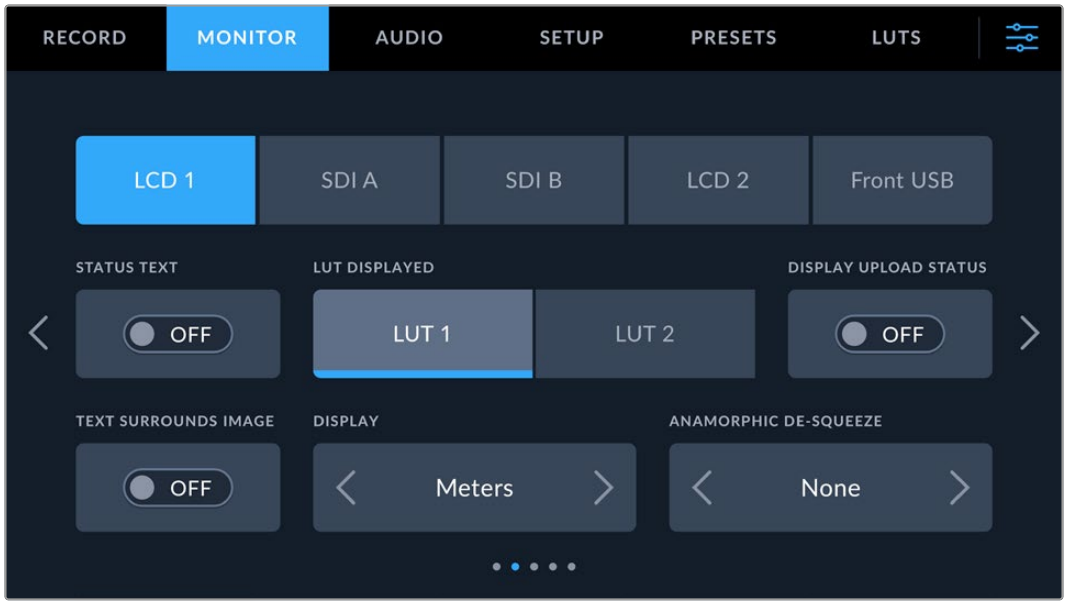

LCD 1, LCD 2, SDI A, SDI B and Front USB

Status Text

It can be useful to hide the status text and meters on your outputs, leaving only the information necessary to compose or direct a shot. Tap the 'status text' switch icon to toggle the appearance of status text and meters for that output. Overlays such as frame guides, grids, focus assist and zebra will remain visible, if enabled.

Swiping up or down on your URSA Cine's LCD touchscreens will also remove the status text. Swipe again to make the status text visible.

LUT Displayed

Select LUT 1 or LUT 2 for monitoring on URSA Cine 12K LF's outputs and LCDs. Having the choice between two LUTs can be helpful when outputting separate versions of your video signal, for example when monitoring HDR and SDR, using monitors of different capabilities, or when viewing a technical transform on one monitor and a creative look on another. Tap on LUT 1 or LUT 2 to select them.

Refer to the 'LUTs settings' section for information on how to load, manage and assign LUTs to each slot.

Display Upload Status

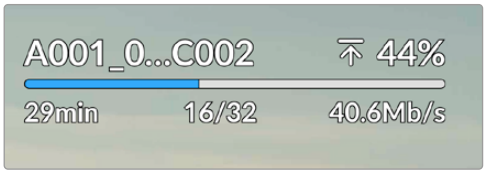

When 'status text' is enabled, toggle the 'upload status' switch to 'on' to display information about the upload status of clips being uploaded to Blackmagic Cloud.

This information includes the current connection speed, clip name, remaining upload time and a progress bar.

Text Surrounds Image

This setting scales the sensor image to avoid any partial obstruction by the status text. When this is turned on it is applied to all outputs including the SDI outputs so you can be sure when operating that no important items in frame are obstructed from view.

Tap the switch to turn this setting on or off.

LCD1 and LCD2 Only

Display

Instead of a histogram and audio meters, your URSA Cine can display codec and resolution information at the bottom edges of the touchscreen. This can be useful if you prefer to use false color for dialing in exposure, or are recording audio separately and want to display additional information in the space normally used by the histogram and audio meter. Simply tap 'meters', 'codec and resolution' or 'focus markers' in the 'LCD1' or 'LCD2' menu to select your preferred view.



SDI A, SDI B and Front USB

Display Status Text For Cinematographer, Director and First AC

The LCD touchscreen displays information such as ISO, white balance, and aperture that is useful to a camera operator or cinematographer setting up individual shots on that camera. Your camera's EVF and SDI outputs, however, can also show information useful to a director or script supervisor who is keeping track of multiple shots or cameras.

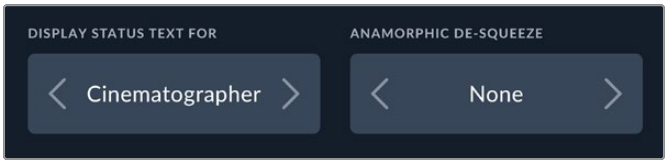

Setting the status text to 'director' changes the status text for that output to show the following information.

FPS

Displays the currently selected frames per second. If off speed frame rate is disabled, only the project frame rate will be shown. If an off speed frame rate is being used, the sensor frame rate will be shown, followed by the project frame rate.

CAM

Displays the camera index as set in your URSA Cine's Slate. See the 'slate' section in this manual for more information.

OPERATOR

Identifies the camera operator as set in your URSA Cine's Slate. See the 'slate' section in this manual for more information.

DURATION DISPLAY

Displays the duration of the current clip, while recording, or the last recorded clip in the following format: hours:minutes:seconds

REEL, SCENE, TAKE

Displays the current reel, scene and take. For more information on reels, scenes, takes and their labeling conventions, refer to the 'slate' section in this manual.

DYNAMIC RANGE

The bottom left hand corner of the monitor displays your URSA Cine's currently applied LUT, if applied to that output. If no LUT is applied, 'film' or 'video' dynamic range will be displayed.

TIMECODE

The bottom right of the monitor displays your URSA Cine's timecode, in the following format: hours:minutes:seconds:frames.

Anamorphic Desqueeze

When using anamorphic lenses, select the anamorphic desqueeze to match the squeeze factor of the lens. For example, if you are using a lens with a 1.8x squeeze, select 1.8x from the anamorphic desqueeze setting. This will correct the image vertically on the LCD, EVF or SDI outputs to counter the horizontal squeeze allowing you to monitor the image with the correct aspect ratio.

Anamorphic lenses squeeze more horizontal image onto the sensor when capturing light and allow recording of wider aspect ratios than the capture medium is designed for. While this captures widescreen images in a way that makes much better use of the vertical resolution of the sensor, it also tends to give a very distinctive 'look' and feel. The lenses are prone to distortions and stylistic image characteristics that many people find appealing. Generally speaking, the greater the squeeze factor of the lens the more extreme the distortions and flaring characteristics so 2x and 1.8x anamorphic lenses often provide a more stylized look where as 1.3x and 1.5x provide a less extreme and more subtle combination of anamorphic lens 'character'.

There are many different monitoring desqueeze factors available on your URSA Cine. Depending on what lenses you would like to use and what final aspect ratio you choose, this gives you a great deal of freedom because you can select the lenses with the characteristics you desire and be able to achieve the delivery aspect ratio you are after.

The table in this section shows the desqueezed aspect ratio for the corresponding optical squeeze of your lens.

The highlighted values represent some more common and useful widescreen delivery ratios with aspects that can be achieved with the various different squeeze factors available.

Capture Aspect Ratio		**3 : 2**	**16 : 9**	**17 : 9**	**2.4 : 1**	**6 : 5**	**2:1**	**2.2:1**
		Desqueezed Aspect Ratio						
Squeeze Factor	**None**	1.50:1	1.78:1	1.89:1	2.40:1	1.20:1	2:1	2.2:1
	1.33x	2.00:1	2.36:1	2.51:1	3.19:1	1.60:1	2.66:1	2.93:1
	1.5x	2.25:1	2.67:1	2.83:1	3.60:1	1.80:1	3.00:1	3.30:1
	1.6x	2.40:1	2.84:1	3.02:1	3.84:1	1.92:1	3.20:1	3.52:1
	1.66x	2.49:1	2.95:1	3.14:1	3.98:1	1.99:1	3.32:1	3.65:1
	1.8x	2.70:1	3.20:1	3.40:1	4.32:1	2.16:1	3.60:1	3.96:1
	2.0x	3.00:1	3.56:1	3.78:1	4.80:1	2.40:1	4.00:1	4.40:1

TIP If any of the formats are close but not exactly right for the format you are delivering, you can always crop very slightly vertically or horizontally in post, for example if you want to achieve 1.89 from 1.8:1 or from 2.49 to 2.4:1.

URSA Cine's more vertical capture formats with 6:5 and 3:2 aspect ratios allow you to use the full height of the 23.32mm 12K large format image sensor in combination with anamorphic lenses for a variety of widescreen delivery formats which range between a 1.8:1 and 2.7:1 delivery ratio.

Additionally, using anamorphic lenses with 16:9 and 17:9 aspect ratios allow you to use more subtle 1.33x and 1.5x squeeze ratios for widescreen formats.

The highlighted cells in the table are by no means the only formats you can use but are just a useful way of showing how the various different squeeze factors affect the resulting delivery aspect ratio.

Monitor Settings 3

The third page of 'monitor' tab contains identical settings for each output. These settings act globally across all three monitoring outputs. For example, if focus assist is enabled on your URSA Cine's LCD, EVF and SDI outputs, changing the 'focus assist type' from 'peaking' to 'colored lines' will effect all outputs.

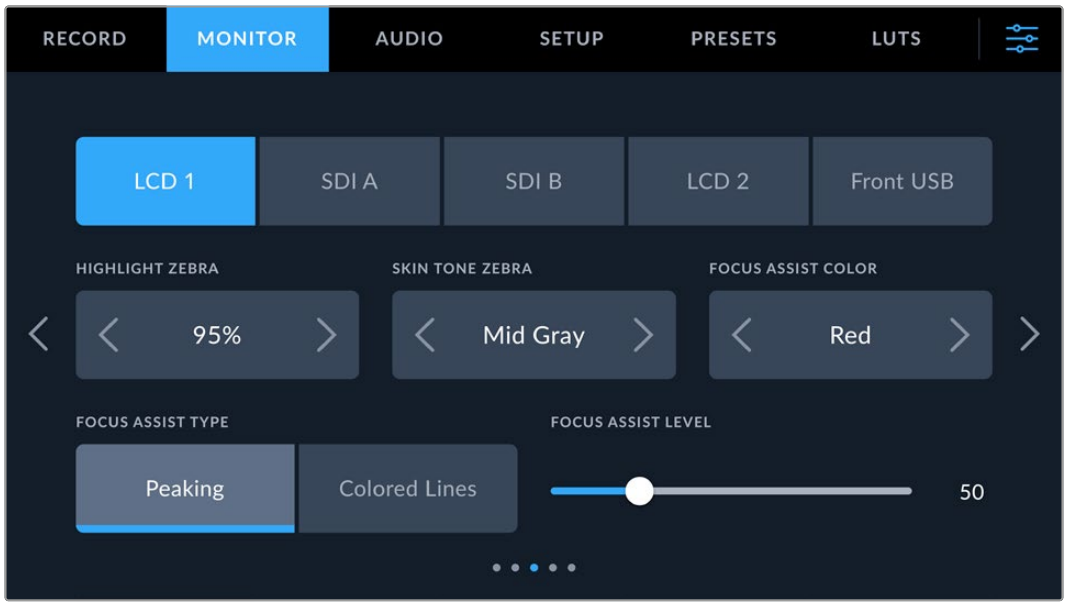

Highlight Zebra

Set the exposure level the zebra appears at by tapping the arrow icons on either side of this setting. The zebra level is measured from 75% to 100% in 5% increments. For example, at 100%, the zebra will appear in areas of the image where luminance has clipped. At 95%, the zebra will appear in areas where chroma is close to clipping a single red, green or blue color channel.

For more information, see the 'zebra' guide in the 'touchscreen controls' section of this manual.

Skin Tone Zebra

The skin tone zebra helps you judge exposure equivalent to a 18% reflectance gray card, mid gray, or 1 stop over mid gray for optimal exposure of the actor in the frame.

Focus Assist Type

Your URSA Cine has two focus assist modes, 'peaking' and 'colored lines.'

Peaking

When ‘peaking’ style focus assist is selected, areas of the shot that are in focus are heavily sharpened on the outputs, but not in the recorded image itself. This causes focused parts of your shot to ‘pop’ out of the softer background on screen. As no additional overlays are used, this can be a very intuitive way to tell when focus is dialed in, especially when the subject you’re focusing on is physically well separated from other elements in shot.

Colored Lines

When ‘colored lines’ style focus assist is selected, a colored line is superimposed around the parts of the image that are in focus. This can be a little more intrusive than ‘peaking’ style focus assistance as the lines are drawn over your image, but especially in busy shots with a lot of visible elements, it can be a precise focus aid.

Focus Color

Use this setting to change the color of focus line overlays when using ‘colored lines’ style focus assistance. Changing the focus line color can make it easier to tell focus assistance lines apart from your image. The available options are ‘white’, ‘black’, ‘red’, ‘green’ and ‘blue’.

Focus Assist Level

To set the level of focus assistance for your camera’s LCD touchscreens, EVF and SDI outputs, move the slider from left to right.

TIP The optimum level of focus assistance varies shot by shot. When focusing on actors, for example, a higher level of focus assistance can help resolve edge detail in faces. A shot of foliage or brickwork, on the other hand, may show distracting amounts focus information at higher settings.

Monitor Settings 4

The fourth page of the monitor tab contains identical settings for each output. These settings act globally across all of your camera’s monitor outputs.

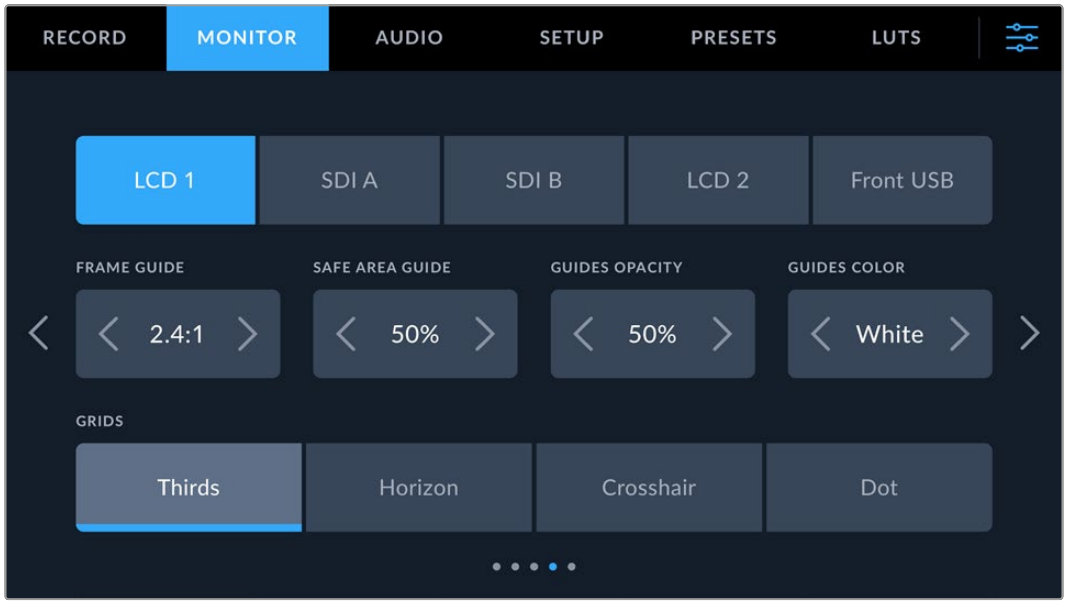

Frame Guide

Tap the left or right arrows in the ‘frame guide’ menu setting to cycle through frame guide options for all outputs on your URSA Cine. The options are detailed in the ‘touchscreen controls’ section of this manual, and are also accessible from the LCD monitoring menu in your LCD touchscreen head up display.

Safe Area Guide

To adjust the size of the safe area overlay on your URSA Cine’s outputs, tap the arrows to the left and right of the percentage displayed in this setting. This percentage indicates the size of the safe area in relation to the image frame. Most broadcasters require a 90% safe area.

Guides Opacity

Tap the left or right arrows in the ‘guides opacity’ menu setting to choose the opacity of the areas obscured by frame guides on your LCD touchscreens, EVF and SDI outputs. The options are 25%, 50%, 75% and 100%.

Guides Color

Tap the left or right arrows in the ‘guides color’ menu setting to choose a color for the guides.

Grids

To set which combination of grids and crosshairs you want to display on your URSA Cine’s outputs, tap the ‘thirds’, ‘horizon’ ‘crosshairs,’ or ‘dot’ options in this setting.

For more information, see the ‘grids’ guide in the ‘touchscreen controls’ section earlier in this manual.

Monitor Settings 5

The fifth page of your URSA Cine’s monitor tab contains settings that vary depending on the selected output.

LCD1, LCD2 and Front USB Only

LCD or Viewfinder

Drag the ‘LCD brightness’ slider left or right to adjust the brightness of your URSA Cine’s touchscreens. Drag the ‘viewfinder brightness’ slider to adjust the brightness of the URSA Cine EVF’s OLED screen.



Front USB Only

Focus Chart

The viewfinder has a built in focus chart so you can focus the eye piece to suit your eyes. The diopter has an adjustment range of -5 to +5. Simply turn the focus diopter on the eyepiece until the chart is in perfect focus.

SDI A and SDI B

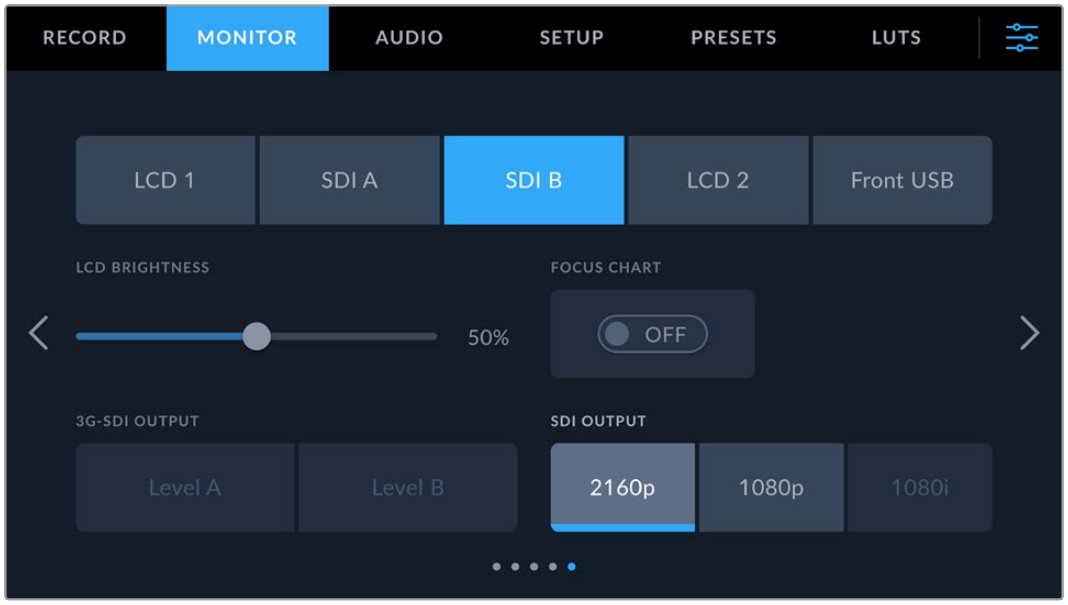

3G-SDI Output

You can change the 3G-SDI output standard to maintain compatibility with equipment that can only receive level A or level B 3G-SDI video. This option will be enabled when you are operating in 50, 59.94 or 60 frames per second and outputting 1080p. Tap the ‘Level A’ or ‘Level B’ icon to select each standard.

SDI Output

Both outputs allow you to choose between progressive and interlaced HD output or progressive Ultra HD. The options available in this setting depend on your camera’s resolution and frame rate settings. Progressive HD, or ‘1080p’ is always available regardless of your recording resolution and frame rate, while interlaced HD, or ‘1080i’ is available when your project frame rate is set to 50, 59.94 or 60. Ultra HD SDI output, or ‘2160p’ is available when shooting at Ultra HD resolutions.

Audio Settings

The ‘audio’ tab lets you adjust the audio input and monitoring settings on your camera. The audio settings for the camera are spread over two pages. The first page lets you see all channels on one screen.

These settings work together with the switches on your URSA Cine’s internal control panel. After you’ve set your audio source for a particular channel, you can use the internal control panel switches to set the signal type and whether phantom power is enabled for that channel.

Audio Settings 1

The first page of your URSA Cine’s ‘audio’ tab contains the following settings and meters. With all 4 audio channels displayed, this lets you make changes to all of them on a single screen.

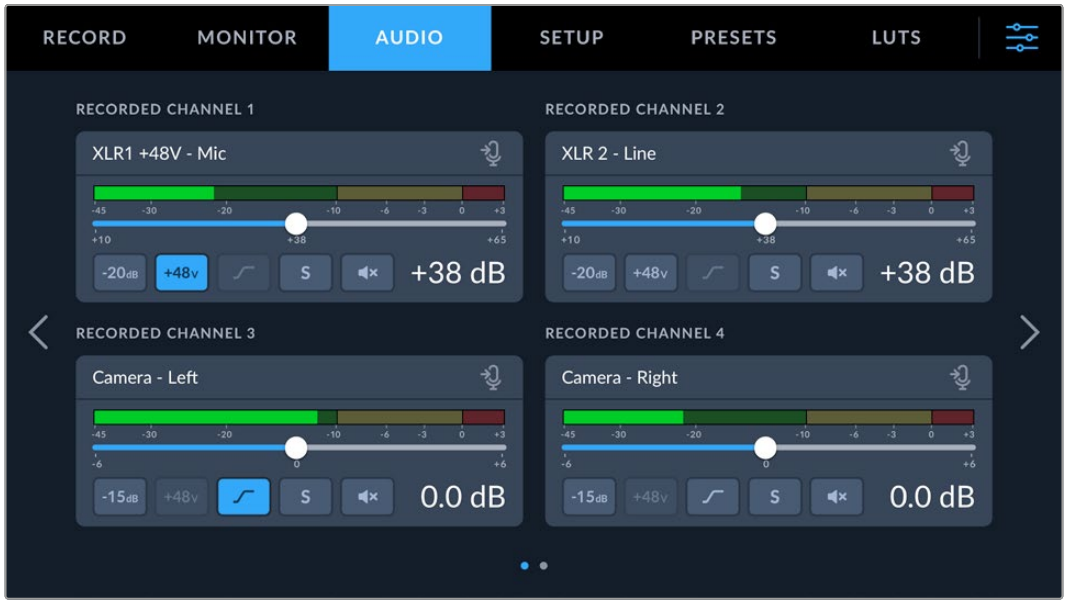



Channel Source

Tap on the channel source icon for a specific channel to open the channel source selector, then tap on the left and right arrows to move through the options. The options available are:

- **Camera Left or Right**
  Records from your camera's internal microphones.
- **Camera Mono**
  Creates a single audio channel from your camera's built in microphone's left and right channels.
- **XLR 1 or 2**
  Use this setting to record from your camera's XLR inputs. Depending on which audio signal you've set on your URSA Cine's internal control panel switches, your XLR input may be listed as 'mic,' 'line,' or 'AES.' If phantom power is enabled and you have your XLR input set to 'mic' you'll also see a '+48V' indicator here. It it is important to ensure that the +48V switch gets turned 'off' when you disconnect your phantom powered microphone.
- **XLR 1 or 2 - Mic Backup**
  When the internal control panel switches are set to 'mic' you can select 'mic backup'. Use this setting to record audio from a microphone plugged into your URSA Cine's XLR 1 or 2 input at a lower level than the standard 'mic' recording. This can be used to avoid audio clipping in the event of an unexpected increase in loudness.
- **None**
  Disables your audio channel.

Channel 1, 2, 3 and 4 Level Sliders

Use these sliders to adjust the recording levels of your chosen channel sources. Audio meters are included with each slider to help you set the correct audio level. To achieve optimum audio quality, ensure your audio levels do not reach 0 dBFS. This is the maximum level that your camera can record, meaning that any audio that exceeds this level will be clipped, resulting in distortion. Drag the level sliders for each channel right or left to increase or decrease their audio signal strength

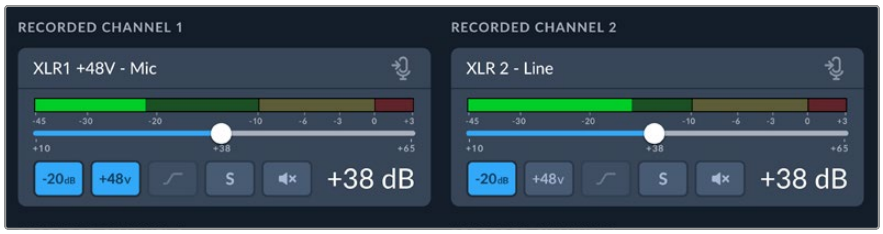

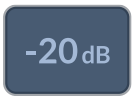

Pad XLR -20dB

The -20dB pad option within each channel setting gives you added control to further reduce the input gain levels on your camera's XLR audio input when shooting in a loud environment even after your input levels are already turned down. Tap on the -20dB icon to enable. Tap again to disable.



+48 Volt Phantom Power

Your camera's XLR input can provide 48v phantom power so you can use microphones that aren't self powered. When your camera's channel source is set to 'XLR - Mic', simply tap the +48v icon to enable phantom power.

NOTE It is standard practice to plug in your XLR cable before switching phantom power on. It is also important to switch phantom power to 'off' when you no longer have a phantom powered microphone connected. Connecting equipment that doesn't require phantom power when still in phantom power mode can damage your equipment, as the camera outputs a charge when in this mode. Phantom power can also take quite a while to discharge after switching it off.

Please be aware that you should wait a few minutes when switching off phantom power before plugging in any other microphones or XLR audio equipment.



Solo

Tap the solo icon to isolate the corresponding audio channel on the headphones output. Solo will mute all other audio channels and only allow the desired channel to be heard. Tap again to turn solo off.



Mute

Tap the mute icon to silence the corresponding audio channel on the headphones output. Tap again to disable mute and make the channel audible again.

TIP The solo and mute features are only applied to the headphones output for audio monitoring purposes and do not affect the recorded audio.

Audio Settings 2

The second page of your URSA Cine's 'audio' tab contains the following settings.

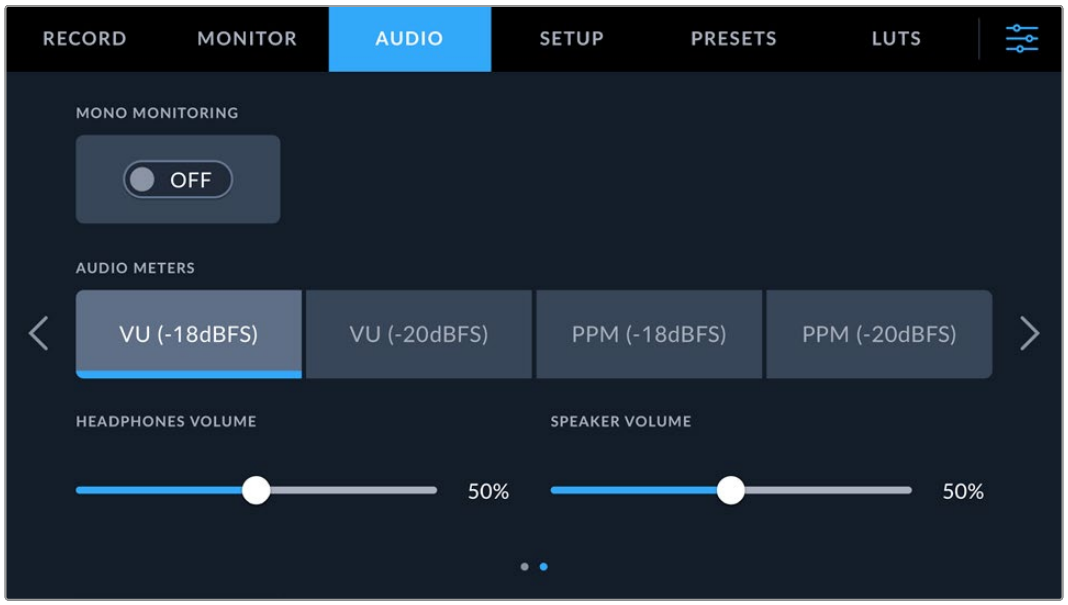

Audio Meters

You can choose from two different audio meter display types.

VU	The VU meter, or 'volume units' meter, averages out short peaks and troughs in your audio signal. If you are using VU metering, adjust the input levels on your Blackmagic URSA Cine so the meter peaks at the 0db indicator on the audio meter. This maximizes the signal to noise ratio and ensures your audio is at the highest quality. If your audio peaks beyond the 0dB indicator there is a high risk of sound distortion.
PPM	PPM meters, or 'peak program meters' displays a 'peak hold' feature that momentarily holds the signal peaks and a slow fall back so you can easily see where your audio is peaking.

Both VU and PPM meters are available at reference levels of -18dBFS or -20dBFS so you can monitor your audio to suit different international broadcasting standards.

Audio meter setting	Standard
PPM (-20 dBFS)	SMPTE RP.0155
PPM (-18 dBFS)	EBU R.68

Headphone Level

This slider adjusts the output levels for headphones attached to URSA Cine's 3.5mm headphone jack. Move the audio slider left or right to adjust levels. These levels will also update when you adjust the headphone volume using the settings wheel on the forward control panel.

Speaker Level

This slider adjusts the output levels for your camera's built in speaker. Move the audio slider left or right to adjust levels. These levels will also update when you adjust the speaker volume using the settings wheel on the forward control panel.

Setup Settings

The ‘setup’ tab contains your URSA Cine’s identification settings, software version, function button settings and other camera settings not directly linked to recording or monitoring. This menu has thirteen pages, which you can cycle through by tapping the arrows at the edge of the LCD touchscreen, or swiping left or right.

Setup Settings Page 1

The first page of your URSA Cine’s ‘setup’ tab contains the following settings.

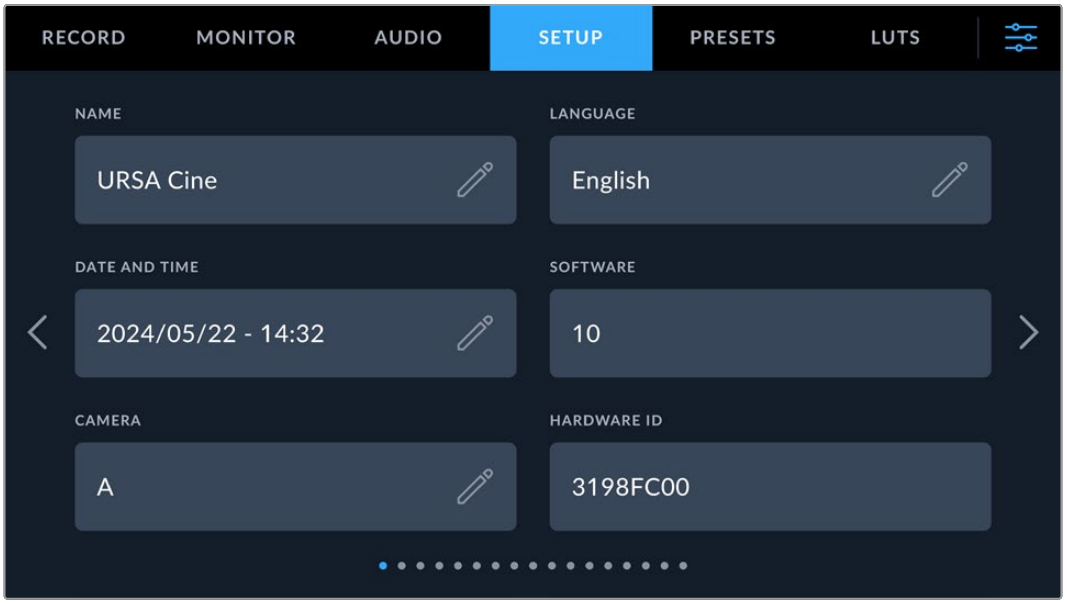

Name

When you first set up your URSA Cine it’s important to give your camera a unique name. If you are using more than one camera, this lets you easily identify it on a network and when changing settings using the Blackmagic Camera Setup utility.

To change the name:

1. Tap on the edit icon to open the text editor.
2. Tap the circled cross to delete the current name and type in a new name using the alpha numeric keyboard.
3. Tap ‘update’ to save the new name.

Language

URSA Cine supports 13 popular languages including English, Chinese, Japanese, Korean, Spanish, German, French, Russian, Italian, Portuguese, Turkish, Polish and Ukrainian.

The language page will also appear on initial start up.

To select your language:

1. Tap the pencil icon and select your language from the list.

2 Select ‘update’ to return to the setup menu.

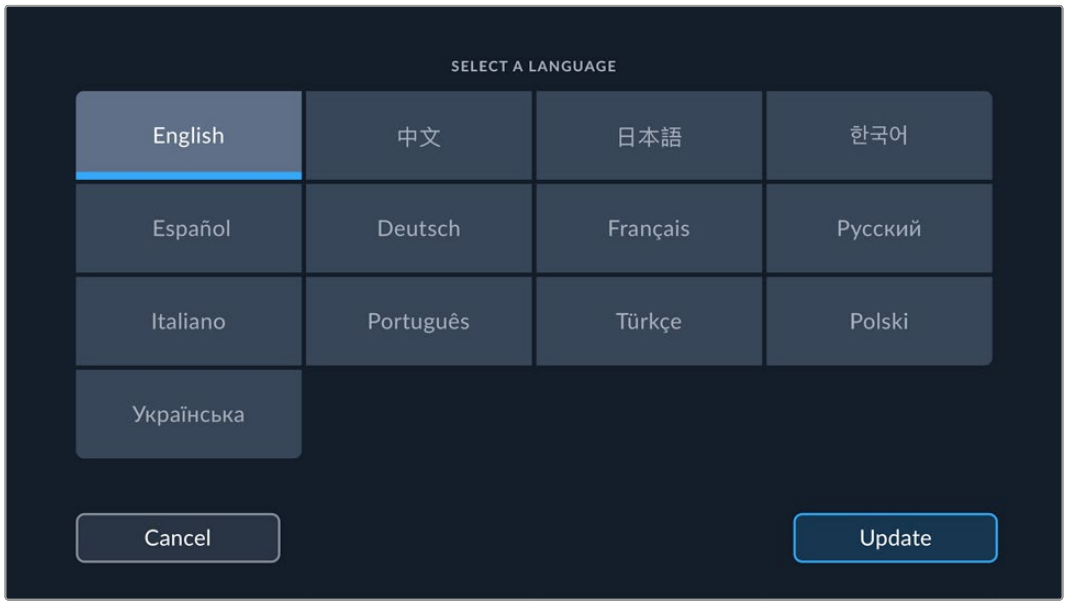

Date and Time

Set your camera’s date and time by tapping the ‘date and time’ setting. The date format is year, month, day and the time format is 24 hour. Date and time are also used for time of day timecode if an external timecode source is not connected. The date and time can be set manually by entering your own date, time and time zone, or you can set your camera to set it automatically.

When setting manually, tap on each field to enter the time and date and tap ‘update’ to confirm.

When set to ‘automatically’, your URSA Cine will update the date and time when connected to a network via Ethernet, or the next time you update your camera. The camera’s default network time protocol server is time.cloudflare.com but you can set it yourself by tapping the ‘time protocol’ edit icon and entering your own NTP server. After entering the NTP server tap ‘update’ to confirm.

Setting the date and time correctly ensures your recorded clips have the same time and date information as your network and also prevents conflicts that can occur with some network storage systems.

Software

Displays the version number of the currently installed software. See the ‘Blackmagic Camera Setup Utility’ section for more information on updating software.

Camera

The camera setting sets the alpha numeric prefix at the start of a clip’s filename when recording to external media. To edit the prefix, tap on the edit icon and replace it with a new one. Tap ‘update’ to apply.

Hardware ID

The ‘hardware ID’ indicator displays an 8 character identifier for your Blackmagic URSA Cine. This is unique to each camera. A longer, 32 character version of this ID is also included in the metadata for Blackmagic RAW. This can be useful for identifying which footage came from a particular camera.

Setup Settings Page 2

The second page of your URSA Cine's 'setup' tab contains the following settings.

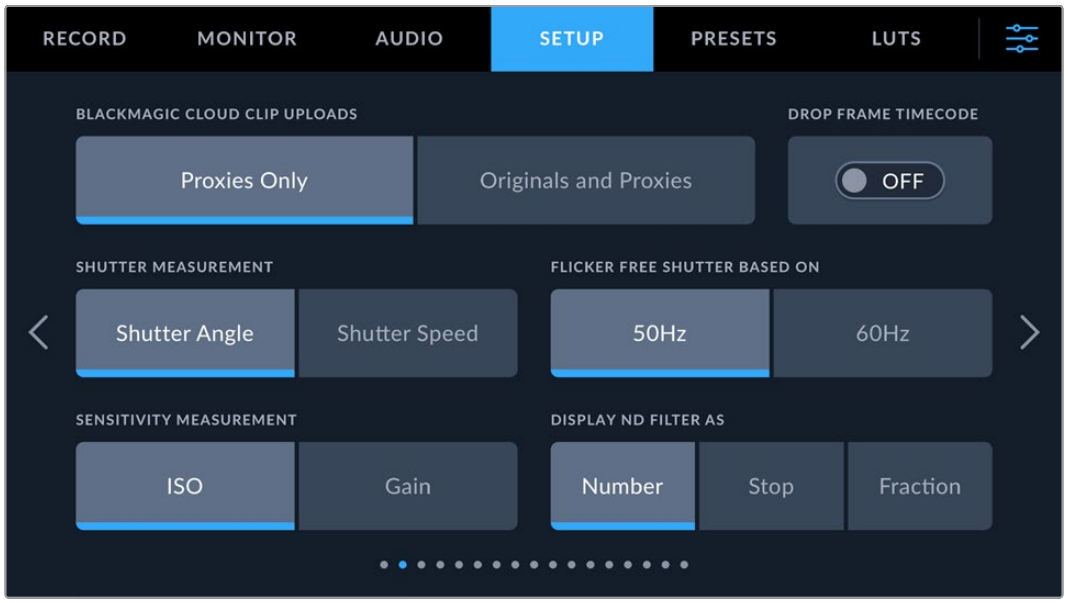

Blackmagic Cloud Clip Uploads

These settings let you choose which files are uploaded to Blackmagic Cloud when you are signed into your Blackmagic Cloud account. When 'proxies only' is selected, only the proxy files from your camera are uploaded. Select 'originals and proxies' to upload both original camera files and proxies.

NOTE When uploading originals and proxies, the proxy files will always upload first so you can start editing straight away while the original Blackmagic RAW files are uploaded.

Drop Frame Timecode

Use the 'drop frame timecode' option to use drop frame timecode when using NTSC project frame rates of 29.97 and 59.94. Drop frame timecode drops a small number of frames from the timecode at set intervals. This keeps your project timecode accurate despite each second not containing a whole number of frames at NTSC frame rates.

Shutter Measurement

Use this setting to select whether to display shutter information as 'shutter angle' or 'shutter speed'. It's important to note that both shutter measurements effect motion blur, but work in slightly different ways. See the 'touchscreen controls' section of this manual for a full explanation of shutter measurement.

Flicker Free Shutter Based On

Use this setting to change the mains power frequency your URSA Cine uses to calculate flicker free shutter settings.

When shooting under lights, your shutter speed can effect the visibility of flicker. Your URSA Cine will automatically calculate flicker free shutter speeds for your current frame rate and display suggestions in the 'shutter speed' menu. These speeds are effected by the frequency of the local mains power supply used to drive those lights. In most PAL countries, this

frequency is 50Hz, while NTSC countries typically use 60Hz power. Simply tap ‘50Hz’ or ‘60Hz’ to set the right frequency for your region.

Characteristics of various light sources may still cause flicker even when using flicker free shutter values. We recommend performing a test shoot when not using continuous lights.

Sensitivity Measurement

Your camera lets you display the light sensitivity as ISO or Gain. ISO is the traditional standard for measuring the sensitivity to light in a cinema camera, however you may wish to select gain to match your experience shooting with broadcast cameras.

Display ND Filter As

Use this setting to adjust how the ND filter indicator on your URSA Cine 12K LF displays the ND filter setting. Each setting corresponds to a different camera convention. Cinematographers typically use ND number notation, while those familiar with DSLRs or broadcast cameras may prefer this information displayed as f stops or as a fraction of available light.

These options are available here as ‘number,’ ‘stop,’ and ‘fraction,’ respectively.

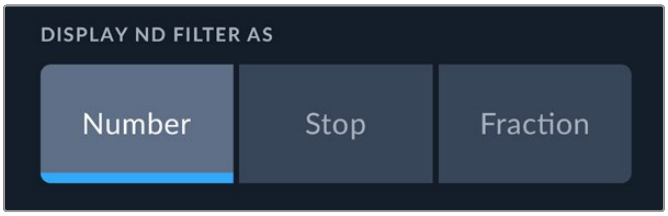

Setup Settings Page 3

The third page of your URSA Cine’s ‘setup’ tab contains the following settings.

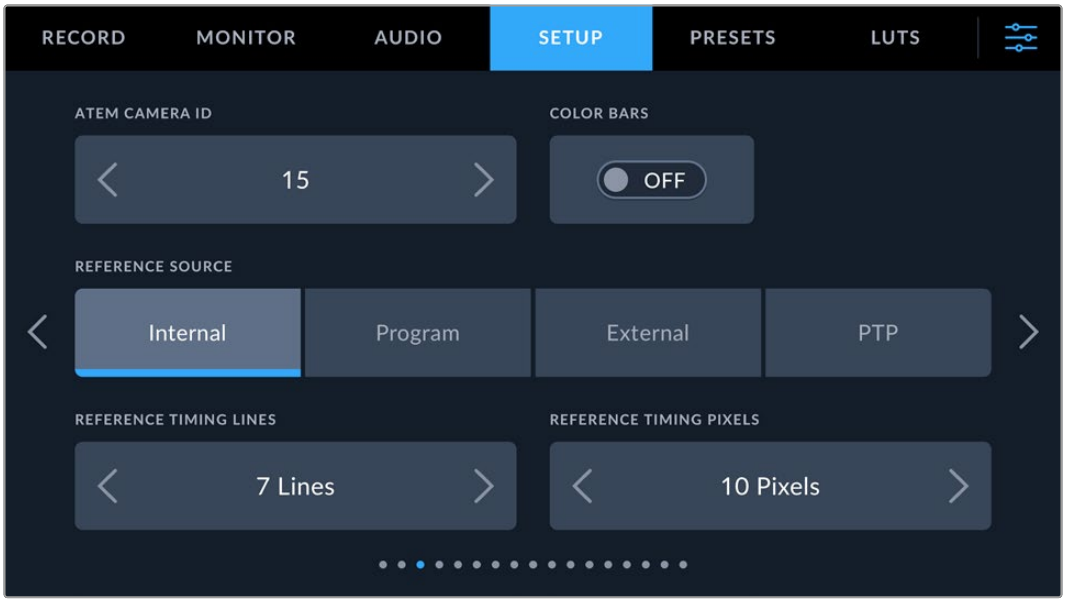

ATEM Camera ID

When your URSA Cine 12K LF is connected to an ATEM switcher via SDI, your camera receives tally and camera control signals via the camera’s SDI B input. This would primarily be the switcher’s program return feed so you can monitor on air during a live production. Your camera has an ATEM camera ID to make sure the ATEM switcher sends the control signals to the correct camera. The camera number can be set to a value of 1-99 by tapping the left or right

buttons or tapping the number to reveal the numeric keypad. The default setting is 1. If you are connecting to an ATEM IP switcher using SMPTE-2110 you don't need to set an ATEM camera ID.

Color Bars

Outputting color bars is useful when connecting your URSA Cine to a switcher or external monitor. This means even if you are setting up and don't have a lens attached yet, you can still output a picture and confirm the connection. To turn on color bars for all outputs on your URSA Cine, including the LCD touchscreen, simply tap the 'color bars' switch icon.

Reference Source

This setting is used to select the reference source. Your URSA Cine can lock to an internal or external reference source, the reference signal in the program input from an ATEM SDI switcher or PTP when the camera resolution is set to 4K Live SMPTE-2110. If you are using your URSA Cine with an ATEM Switcher's SDI camera control function, you should set your reference source to 'program' unless the switcher itself and all connected devices are set to an external reference.

NOTE When you are setting your reference source for URSA Cine, you may experience a small dropout on your camera's outputs when switching between your reference sources. This is because the camera is adjusting its referencing timing to match that of the external source. For this reason it is important not to change this setting during a production and only while setting up.

Reference Timing

These settings allow you to manually adjust the reference timing on a line or pixel basis. Simply tap the arrow icons on either side of the 'lines' and 'pixels' settings to make adjustments.

Setup Settings Page 4

The fourth tab of the setup menu contains settings to use when connecting URSA Cine to an ATEM switcher. These include setting the program audio source and talkback levels.

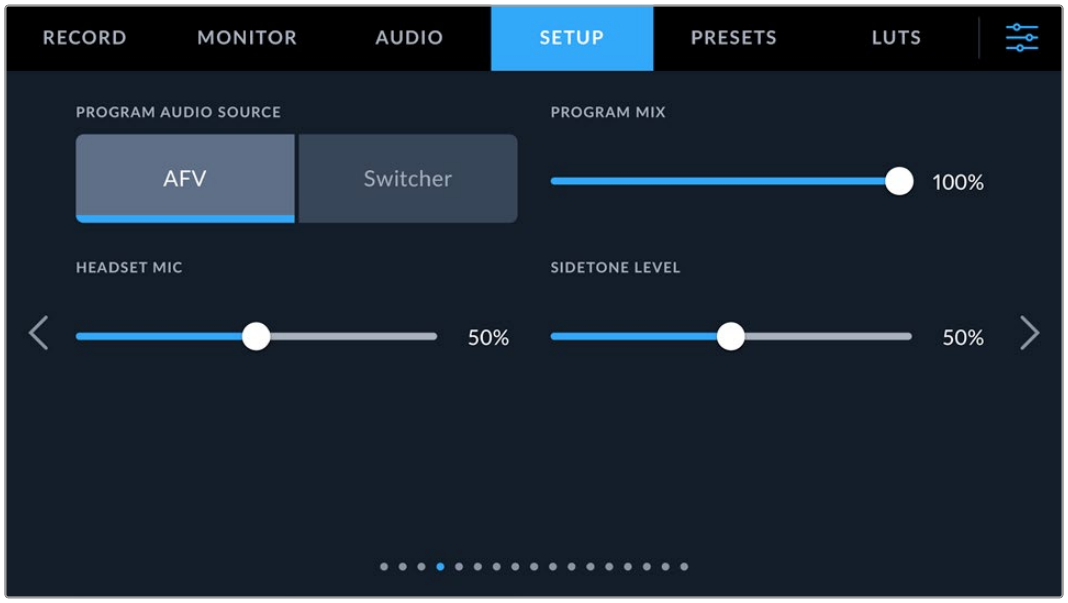

Program Audio Source

When connected to an ATEM switcher, setting ‘program audio source’ to ‘switcher’ prioritizes the program return audio as your input source to be mixed with talkback when monitoring using headphones or a headset.

This is useful when you are not feeding the switcher audio from your camera and will enable you to listen to the program return feed from the switcher via the ‘SDI B’ port or from your routed ‘program return’ if you are using 2110.

Setting ‘program audio source’ to ‘AFV’ prioritizes audio from whatever you are monitoring on camera such as your camera’s internal mics or ‘audio in’ XLR ports and is the default setting.

Headset Monitoring Levels

The program mix, headset mic and sidetone level settings can be individually adjusted to set a perfect mix for your headset. Drag the sliders left or right to decrease or increase the specific level for each.

Program Mix

This setting changes the balance of camera sound to talkback sound. The headphones will output audio following what is displayed on the LCD. For instance, if you are in camera view, camera audio is heard. If you are in program view, program audio is heard. The default setting is 100%.

Headset Mic

Move this level slider left or right to increase or decrease audio microphone input levels. The default setting is 50%

Sidetone Level

Adjust this slider to set the volume of your own voice mic in your headset.

Setup Settings Page 5

The fifth page of your URSA Cine’s ‘setup’ tab is used to set the behavior for some of the buttons on the body of your URSA Cine camera. These buttons are mappable to frequently used features and are quickly accessible when using your camera with the LCD touchscreen closed, such as when you are using URSA Cine EVF.

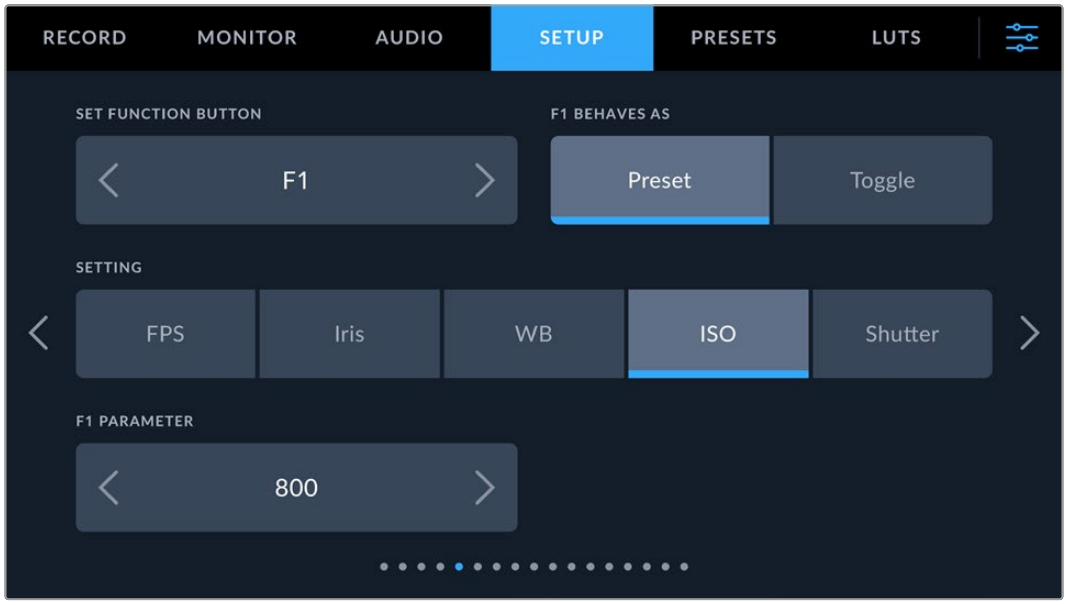

These functions are all assigned using the ‘set function button’ setting.

Set Function Button

Use the arrows to select a function button and then its behavior, a setting, and a parameter for that setting.

Customizable buttons include the F1, F2 and HFR buttons on the forward control panel and the ‘iris’, ‘focus’ and ‘pgm’ buttons on the LCD door. Click through the arrows to see all the available buttons.

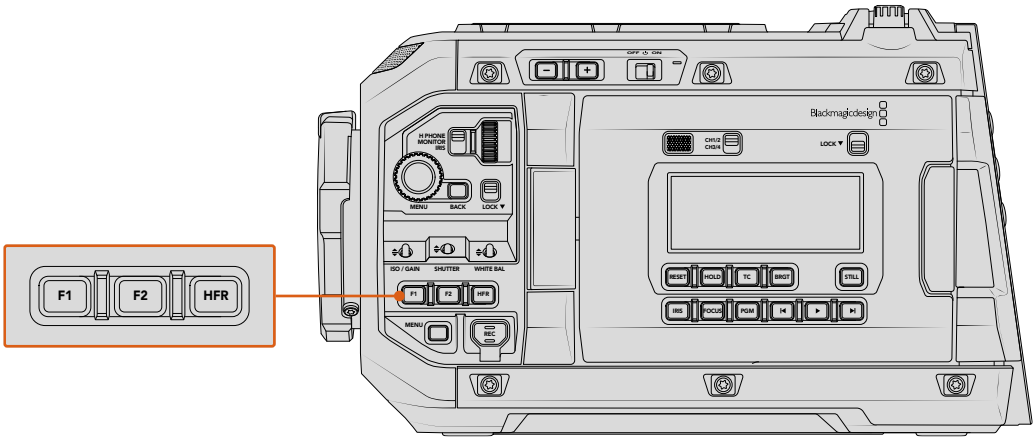

Customizable ‘F1’, ‘F2’ and ‘HFR’ buttons are located on the forward control panel

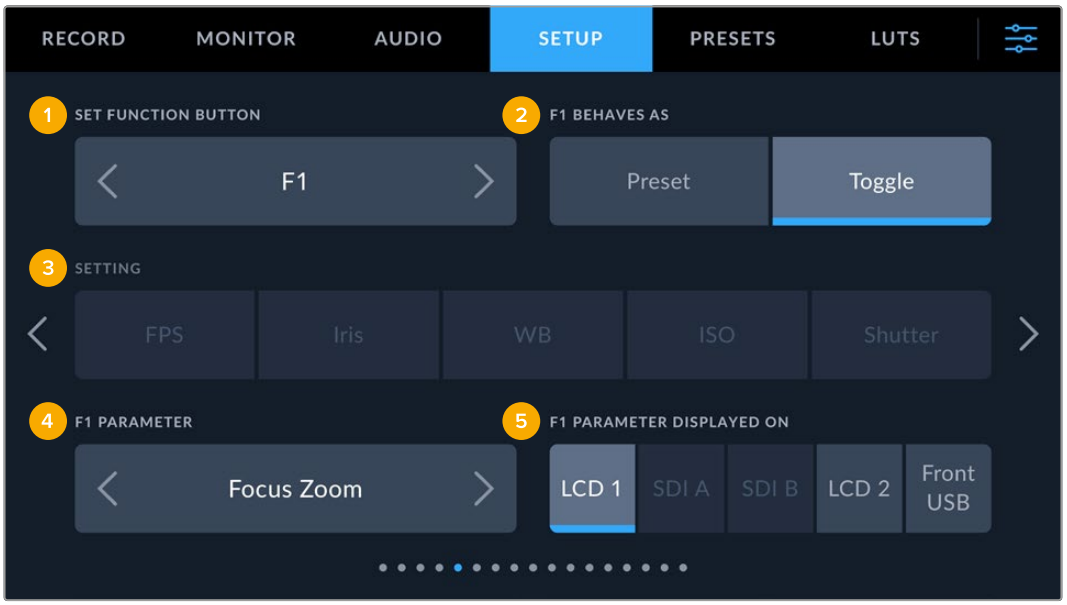

1 Button **2** Behavior **3** Setting **4** Parameter **5** Parameter Displayed On

Function Button Behaves as Preset or Toggle

Once you have selected the function button you want to map, you can select a behavior between preset and toggle.

Preset

When set to ‘preset’, pressing a function button will recall a combination of a setting and a parameter. For example, white balance set to 5600 K.

To set a preset:

1. First set the ‘behaves as’ setting to ‘preset’.
2. Select the setting you want to use from the ‘setting’ menu.
3. Adjust that setting by tapping the arrow icons on either side of the ‘parameter’ menu.

Now when the selected function button is pressed, the preset setting and parameter will be applied.

Toggle

When set to ‘toggle’, pressing a function button will toggle a setting on or off. For example, false color, zebra, grid and many more. Tap the left or right arrows in the parameter menu to scroll through the available options. The following options are available:

Clean feed	Focus zoom	Playback
Display LUT	Status text	False color plus zebra
Frame guides	None	Pre-record
Focus assist	Stream	Follow focus
False color	ND up	HUD
Zebra	ND down	Back
Grid	ND toggle	Slate
Safe area guide	Focus	Audio select
Off speed rec	Iris	Stream status
Color bars	Call	Forward
Push to talk	Still	Reverse
Record	Auto White Balance	
Program return	Menu	

When ‘focus zoom’ is enabled, you can use the menu wheel on the forward control panel to move the region of zoom and adjust the magnification level. Pressing the menu wheel toggles between zoom and magnification adjustment.

NOTE URSA Cine 17K models include an parameter option called ‘quiet record’ that lowers the fan speed when operating in very quiet environments. The fans will return to normal speed once you toggle the setting off.

F1 Parameter Displayed On

Using the ‘toggle’ behavior also lets you select the output this setting applies to. Simply tap any combination of LCD 1, SDI A, SDI B and LCD 2 to select. If the output for an option is not available, such as ‘color bars’ which always applies to all outputs, the output options are disabled.

In addition to mapping buttons on the body of your URSA Cine, you can also set the behavior of function buttons on accessories including the Blackmagic PYXIS Monitor, URSA Cine Studio Viewfinder and URSA Cine EVF. Each of the buttons can also be given a behavior although not all settings or parameters listed above will be available. For example, the ‘menu’ option is unavailable on the URSA Cine EVF as there are no menu controls.

Setup Settings Page 6

The sixth page of your URSA Cine’s ‘setup’ tab contains settings to configure the optional Blackmagic PYXIS Monitor. The settings on this page will only be active when you have a PYXIS Monitor connected to your camera.

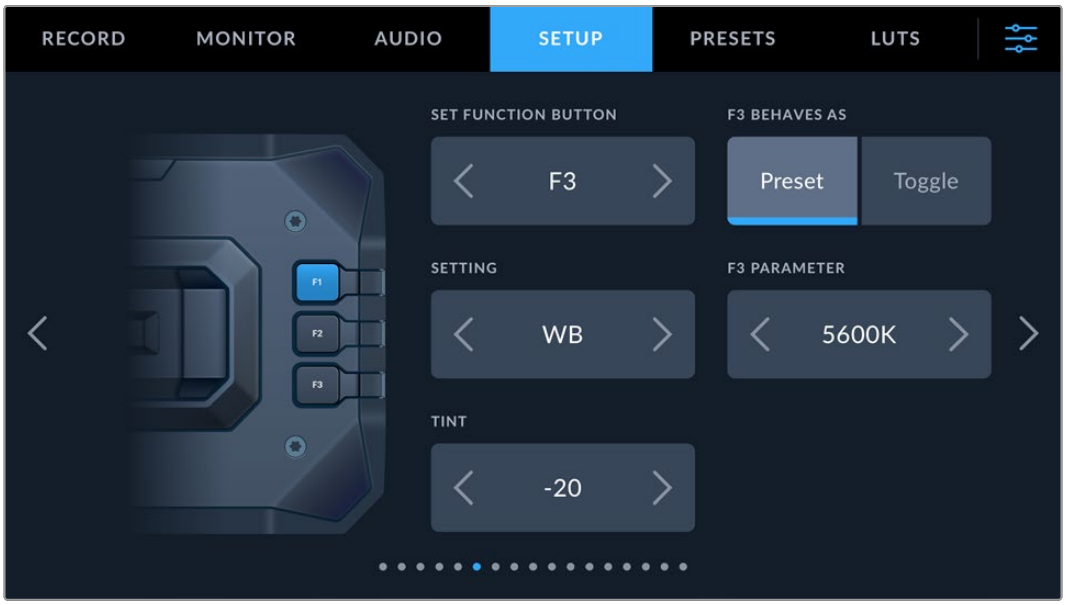

Set Function Button

The three function buttons on the rear panel of Blackmagic PYXIS Monitor can be mapped to frequently used features using the ‘set function button’ setting. Tap the left or right arrows to select the button that you want to assign a function to.

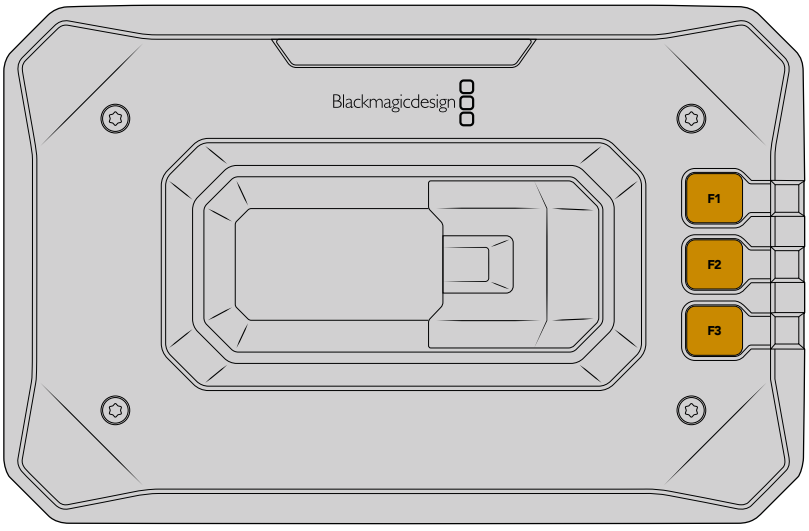

The three function buttons on PYXIS Monitor’s rear panel

Setup Settings Page 7

The seventh page of your URSA Cine's 'setup' tab contains settings to configure the optional Blackmagic URSA Cine Studio Viewfinder. These settings behave in a very similar fashion to mappable function buttons on the URSA Cine camera body and the settings and will become active when a Blackmagic URSA Cine Studio Viewfinder is connected to your camera.

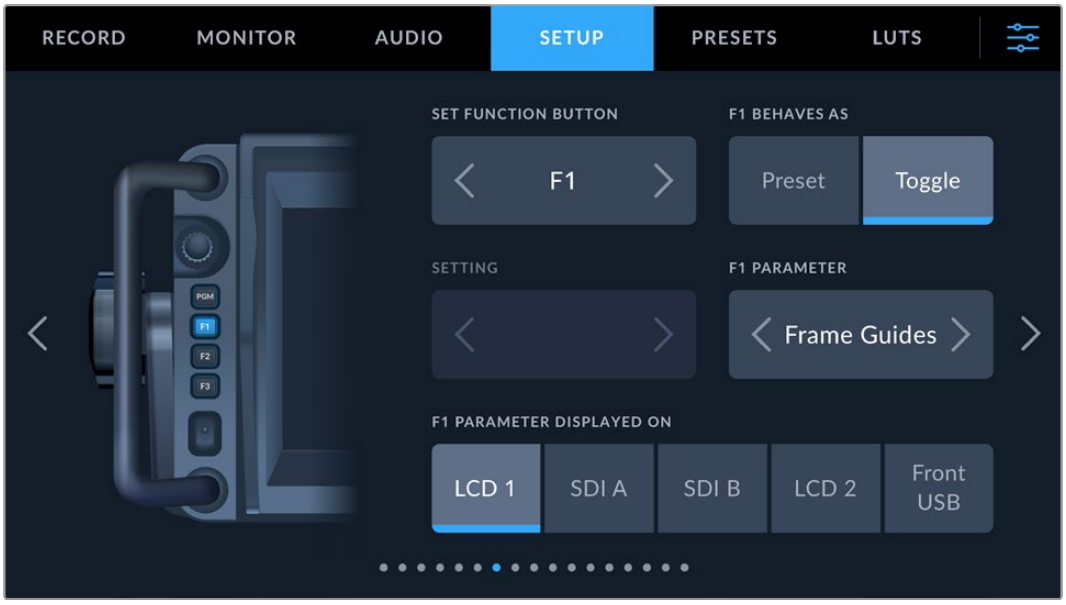

The three function buttons on the left side of URSA Cine Studio Viewfinder along with the 'PGM' button can be mapped to frequently used features using the 'set function button' setting. These can be mapped to behave as a preset or toggle button using the same steps as detailed in 'setup settings page 5'.

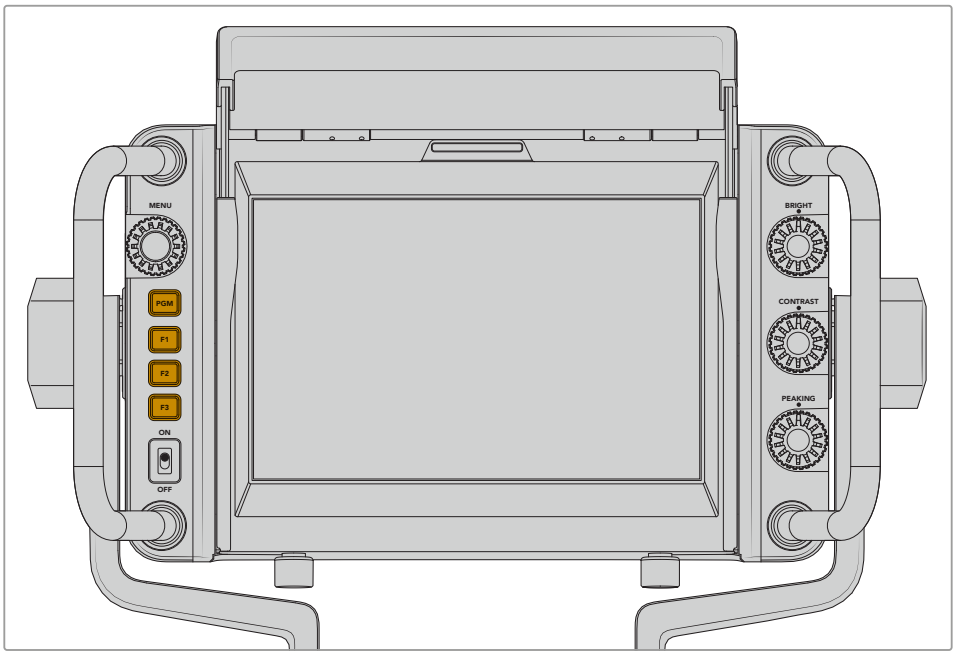

The mappable buttons on URSA Cine Studio Viewfinder

Setup Settings Page 8

The eight page of your URSA Cine's 'setup' tab contains settings to configure the optional Blackmagic URSA Cine EVF. These settings behave in a very similar fashion to mappable function buttons on the URSA Cine camera body and the settings and will become active when a Blackmagic URSA Cine EVF is connected to your camera.

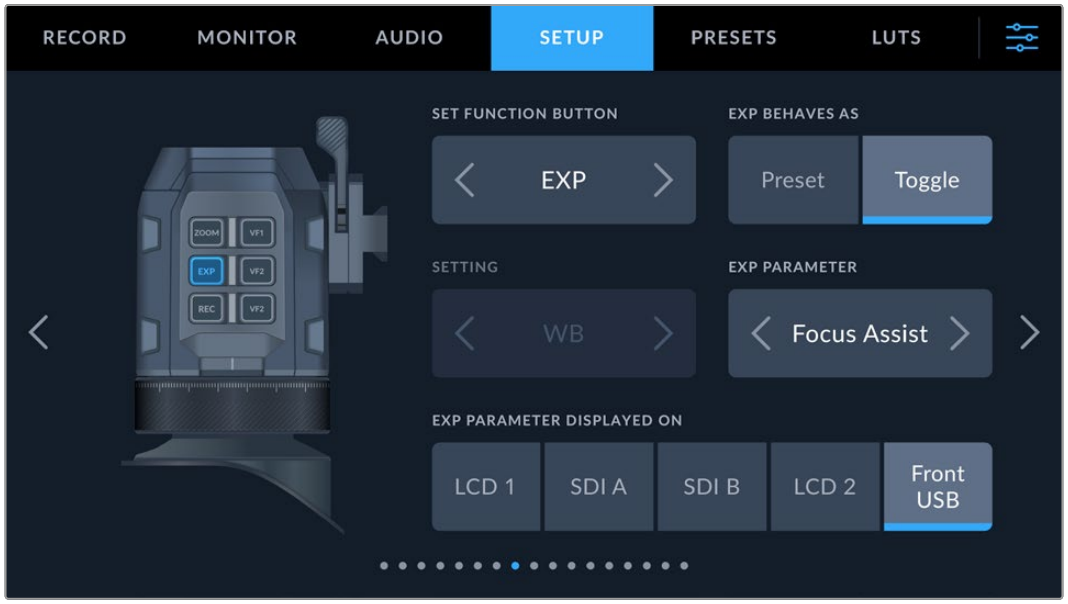

The six buttons on the top of URSA Cine EVF can be mapped to frequently used features using the 'set function button' setting. You can configure these buttons to behave as a preset or toggle button using the same steps detailed in 'setup settings page 5'. You can also set individual buttons to 'none' to disable them and prevent accidental selection.

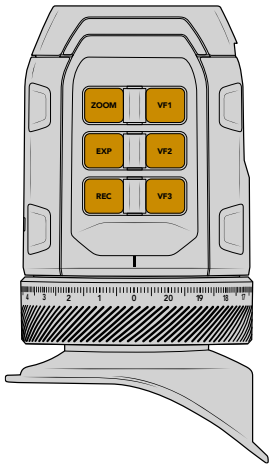

The mappable buttons on URSA Cine EVF

Setup Settings Page 9

The ninth page of your URSA Cine's 'setup' tab contains settings to configure the optional Blackmagic Zoom Demand. These settings are only active when you have Blackmagic Zoom Demand attached to your URSA Cine.

For more information on attaching and using Blackmagic Zoom Demand with your URSA Cine, refer to the ‘Blackmagic Zoom and Focus Demand’ section later in this manual.

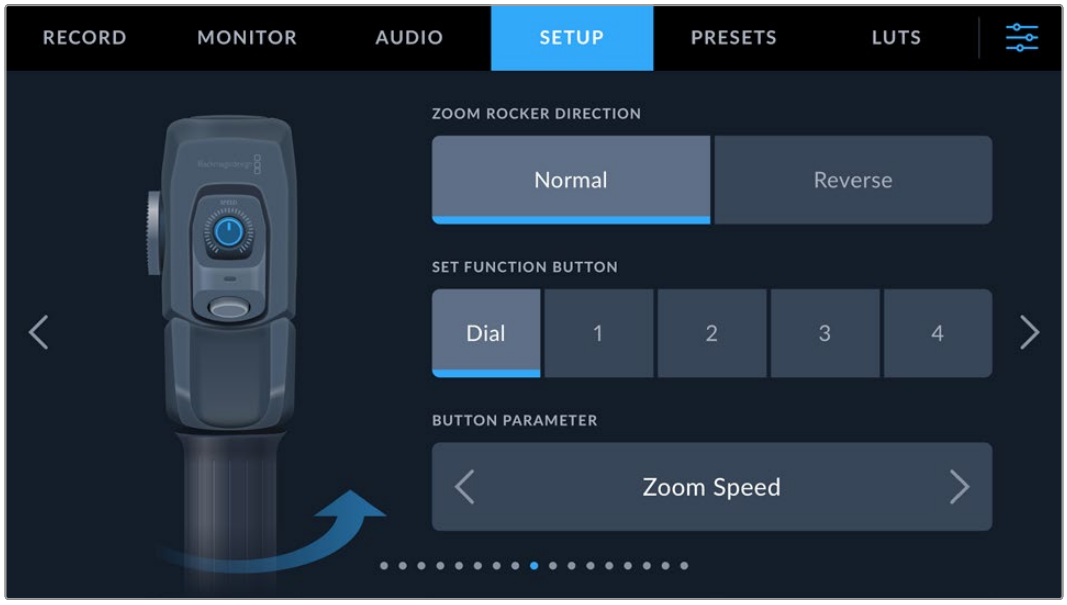

Zoom Rocker Direction

Normal

The default zoom rocker direction. Push the zoom rocker to the right to zoom in and to the left to zoom out.

Reverse

When the zoom rocker direction is set to ‘reverse’ push the zoom rocker to the left to zoom in and to the right to zoom out.

Blackmagic Zoom Demand has four zoom function buttons and a speed dial that you can map to different functions.

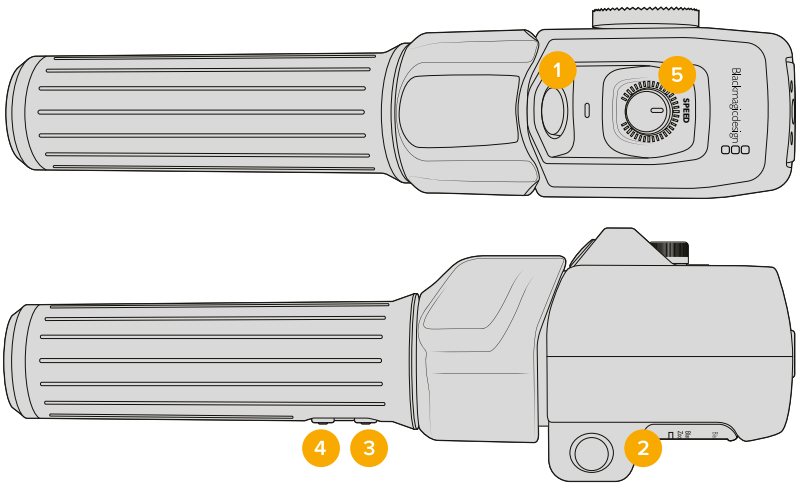

1 Zoom F1 **2** Zoom F2 **3** Zoom F3 **4** Zoom F4 **5** Speed Dial

To assign a different function to the speed dial or one of the zoom buttons choose ‘dial’ or a button number from the ‘set function button’ menu. Next, choose a function by tapping the arrow icons on either side of the ‘button parameter’ menu.

Dial and Function Button Parameter Options

Speed dial	Zoom speed, headphone level, iris adjustment, focus adjustment.
Zoom buttons 1 – 4	Record, push to talk, program return, focus zoom, frame guides, status text, auto focus, auto iris, auto white balance, playback.

Setup Settings Page 10

The tenth page of your URSA Cine's 'setup' tab contains settings to configure the optional Blackmagic Focus Demand. These settings are only active when you have Blackmagic Focus Demand attached to your URSA Cine.

For more information on attaching and using Blackmagic Focus Demand with your URSA Cine, refer to the 'Blackmagic Zoom and Focus Demand' section later in this manual.

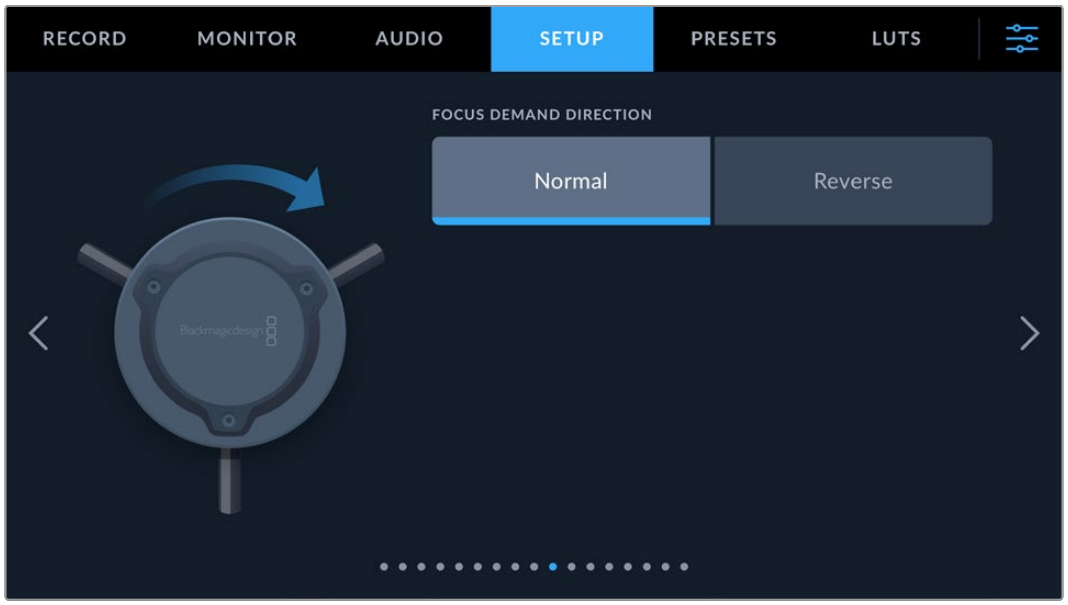

Focus Demand Direction

You can change the direction of the focus wheel on the focus demand by selecting either 'normal' or 'reverse'.

Normal

Turn the focus wheel clockwise to focus on subjects closer to the lens and counterclockwise for subjects further away.

Reverse

Turn the focus wheel counterclockwise to focus on subjects closer to the lens and clockwise for subjects further away.

Setup Settings Page 11

The eleventh page of your URSA Cine's 'setup' tab contains the following settings.

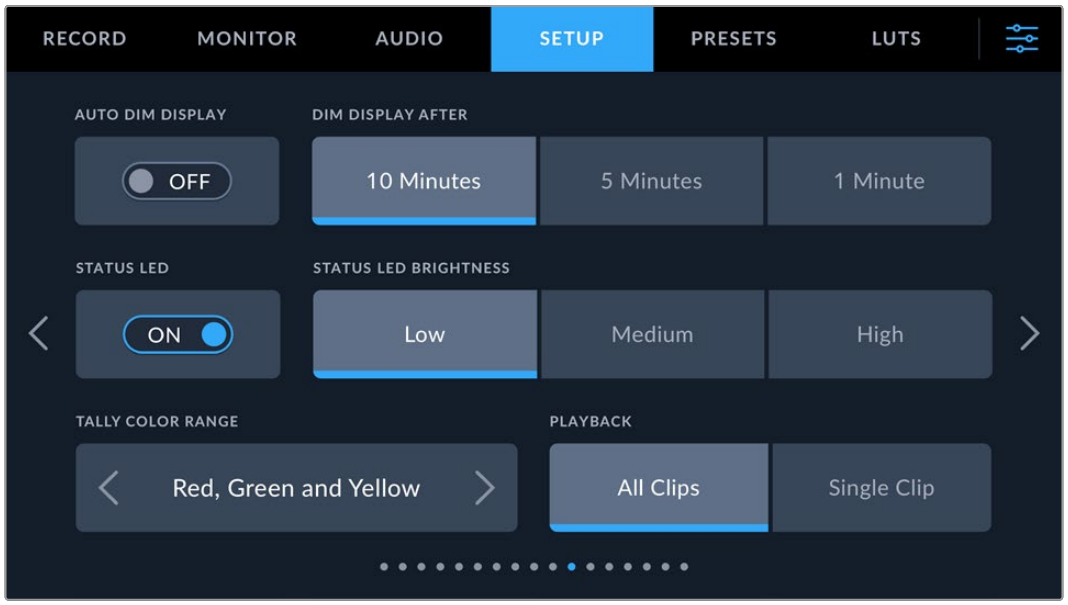

Auto Dim Display and Dim Display After

Enable the 'auto dim display' setting to dim URSA Cine's LCDs after a defined period of inactivity. For example, if you enable 'auto dim display' and set the 'dim display after' setting to 1 minute, the camera's LCDs will automatically dim after 1 minute of inactivity.

Status LED

Your URSA Cine has a small LED next to the power switch that provides tally and status information. You can enable or disable this LED, plus the camera's backlit button LEDs, by tapping the 'status LED' switch icon.

The small LED will provide the following status indicators:

White	The camera is powered on and in standby mode.
Red	The camera is recording. Slow flashing indicates that your card space is low, while rapid flashing indicates dropped frames.
Green	The camera is in playback mode. The LED alternates slowly between green and off while a clip is playing.
Red and Green	If your camera's battery is low, the LED will flash red + green, plus your current status color. For example, if currently recording, the LED indicator will slowly alternate between red and red + green. If your camera is in standby mode, the LED will alternate between white and red + green. The threshold for 'low' battery will vary depending on the type of battery you are using.

Status LED Brightness

To set the brightness of your URSA Cine's LEDs including backlit button LEDs, simply tap 'low,' 'medium,' or 'high.'

TIP The status LED settings on your Blackmagic URSA Cine also control the status LEDs on Blackmagic Zoom Demand and Blackmagic Focus Demand.

Tally Color Range

Use this setting to change the color range of your camera's LEDs, options include red, green and yellow, and red and green.

Playback

This setting allows you to select whether to play back a 'single clip' or 'all clips' during playback. 'All clips' will play back through all matching media sequentially, and 'single clip' will play one clip at a time. This also applies for the loop function. Selecting loop on 'all clips' will play through all of the clips on your media and then loop. Selecting 'single clip' will loop one clip at a time.

Setup Settings Page 12

The twelfth page of your URSA Cine's 'setup' tab contains settings that allow you to set your camera's streaming options.

For more information on setting up streaming from your URSA Cine, refer to the 'streaming video' section later in this manual.

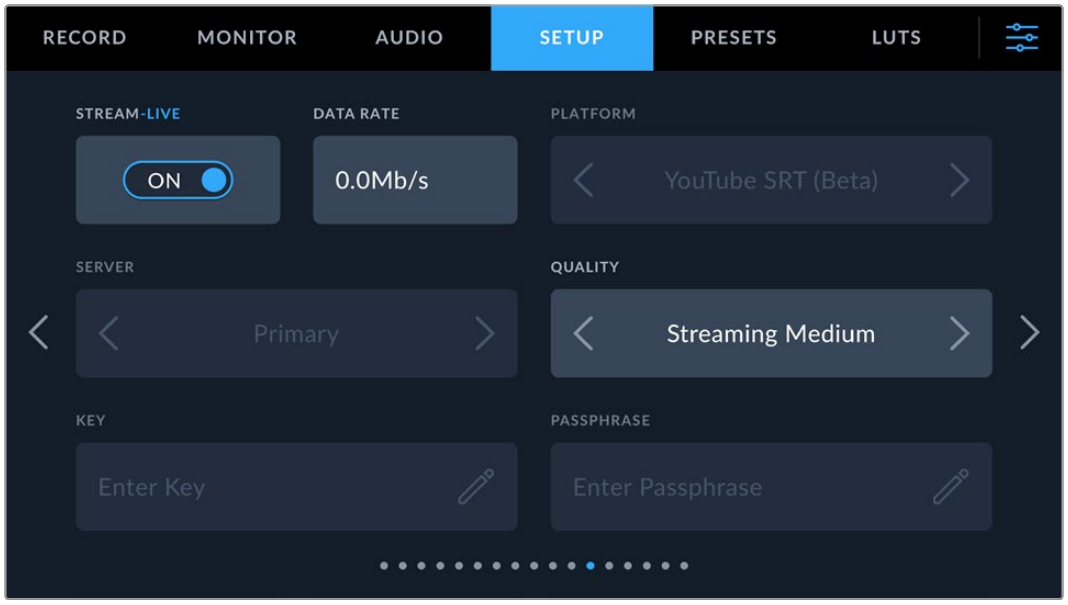

Stream

Use the stream switch to toggle your stream on or off.

Data Rate

Displays the streaming data rate during a stream.

Platform

Select your desired streaming platform. Options include YouTube RTMP, YouTube SRT (Beta), Twitter and Twitch. Any local streaming devices that can receive a stream from URSA Cine such as Blackmagic Streaming Decoder, ATEM Television Studio HD8 ISO or ATEM Mini Extreme ISO G2 model switcher will be available here when connected to the same local network your URSA Cine is connected to.

Server

Use the arrow buttons to choose a server, these options will change depending on your streaming platform.

Quality

Use the arrow buttons to select a streaming quality.

Key

Tap the pencil icon to enter a stream key for your streaming platform.

Passphrase

If you are using a streaming service with the SRT streaming protocol, enter the passphrase assigned from your streaming platform account.

Setup Settings Page 13

The thirteenth page of your URSA Cine's 'setup' tab contains settings that relate to your camera's streaming options.

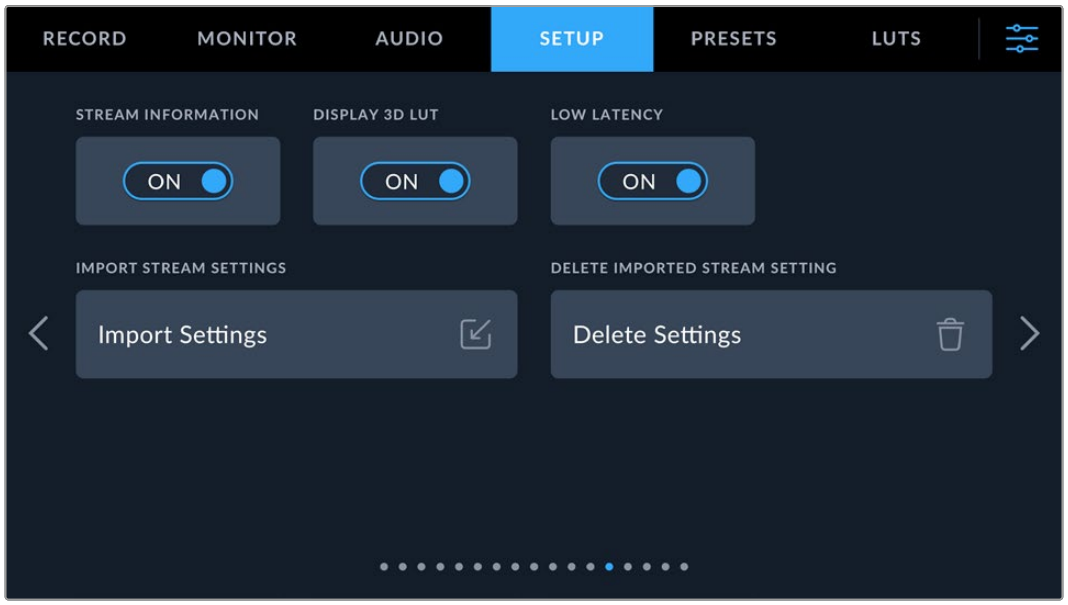

Stream Information

Toggle the 'stream information' switch to 'on' to display information on your camera's status display. This will be viewable on the LCD, SDI and front USB outputs.

The information includes the connection being used for streaming, for example Ethernet or a smartphone, a duration counter that shows the duration of your stream and a data rate using megabits per second.

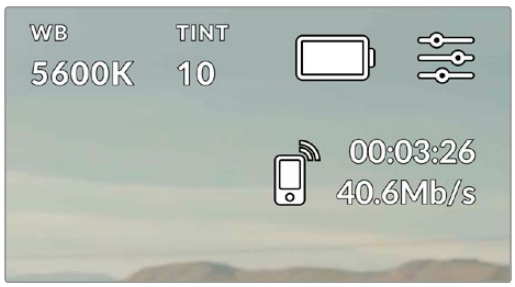

Display 3D LUT

Toggle this setting to 'on' if you want to apply a 3D LUT to your stream.

TIP Switching the ‘display 3D LUT’ setting to ‘on’ will only apply a LUT to the direct stream output.

If you are simultaneously recording to Blackmagic RAW while streaming, you can use the LUT options in the record menu to add a LUT to your files, or the monitor settings to add a LUT on the LCD, EVF and SDI outputs. Refer to the ‘record settings’ section for more information.

Low Latency

Setting low latency to ‘on’ will ensure that there is minimum delay between what is happening live and what is being viewed by the audience. Setting it to ‘off’ gives you more buffering so is a more stable stream if you have an Internet connection that may be subject to dropouts or poor connection.

Import Stream Settings

Tap the ‘import stream settings’ button to import an XML setup file that has been created so your camera can find the Blackmagic Streaming Decoder, ATEM Television Studio HD8 ISO or ATEM Mini Extreme ISO G2 model switcher on the Internet.

For more information on importing an XML setup file, refer to the ‘streaming video’ section later in this manual.

Delete Stream Settings

Press this button to delete your camera’s imported streaming settings. You will be asked to confirm your selection.

Setup Settings Page 14

The fourteenth page of the ‘setup’ tab contains your camera’s network settings. These settings let you set your camera to use a network connected via WiFi, the camera’s 10G Ethernet port as well as Ethernet over USB or mobile when tethering using a smartphone.

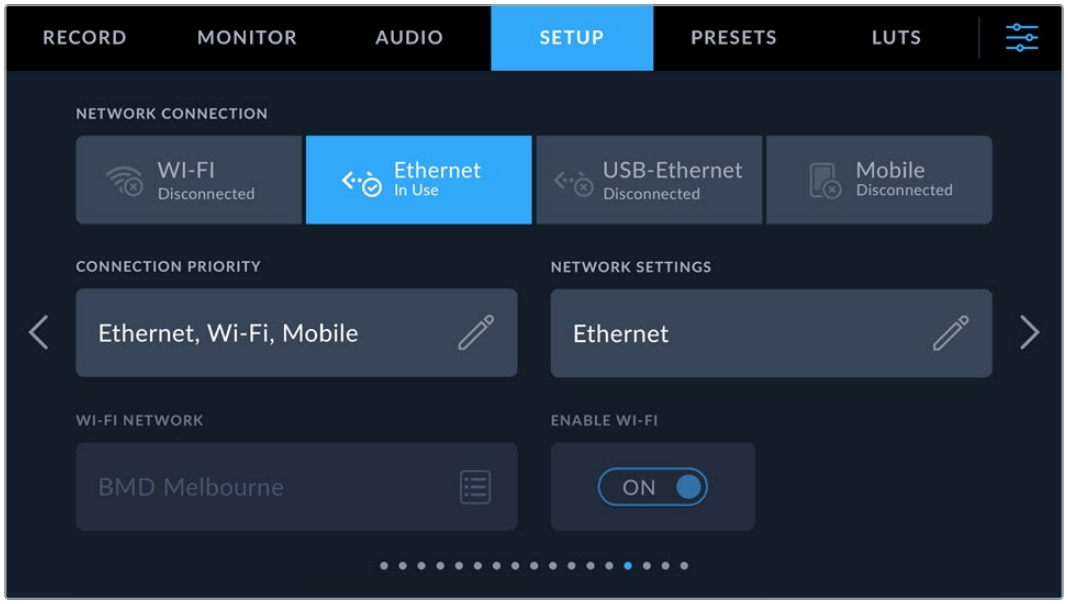

Network Connection

The network connection tabs at the top of the page show you the current state of each connection. When selected, the tab allows you to adjust the settings for that type of connection.

Connection Priority

Connection priority opens up a page where you can select the priority order for network connections used to access the Internet. For example, if you are streaming to Blackmagic Cloud, you could connect to both a WiFi router and a smartphone using USB tethering. Once connected to both networks, tap on the 'connection priority' setting and drag 'WiFi' to the top of the list, followed by 'mobile'. The URSA Cine will now prioritize the WiFi connection for streaming. If the WiFi connection drops out, it will automatically use the mobile connection for Internet access.

Network Settings

Tap the network settings button to open the network settings panel. Here, you can set the camera to use DHCP or static IP and configure your IP address settings. Tap OK to confirm.

WiFi Network

WiFi network opens up a page where you can select from the currently available networks. It's worth mentioning that you will need to screw in the WiFi antennas on the top of your camera to ensure you get a signal when using WiFi.

Enable WiFi

The enable WiFi toggle turns the WiFi on or off.

WiFi Setup

The high speed WiFi feature on your URSA Cine lets you connect to wireless network access points and get the same accessibility you have with Ethernet. This means you can upload clips directly to Blackmagic Cloud or edit storage, transmit video to monitoring equipment via a Blackmagic Streaming Decoder or to an ATEM Television Studio HD8 ISO or ATEM Mini Extreme ISO G2 model switcher. If your network has Internet access you can even stream video directly to the Internet without being physically tethered with a cable. When connected via WiFi and using the camera's IP address you can also control the camera wirelessly using our Camera Control REST API.

The first step to using WiFi is to attach URSA Cine's WiFi antennas to your camera. Please ensure you use the antennas that are provided with your camera. Once the antennas are attached, you will need to enable WiFi in the camera's menu settings and connect to your WiFi router.

To enable and connect WiFi:

1 Open the menu settings on your camera and navigate to the 'network connection' page of the 'setup' settings.

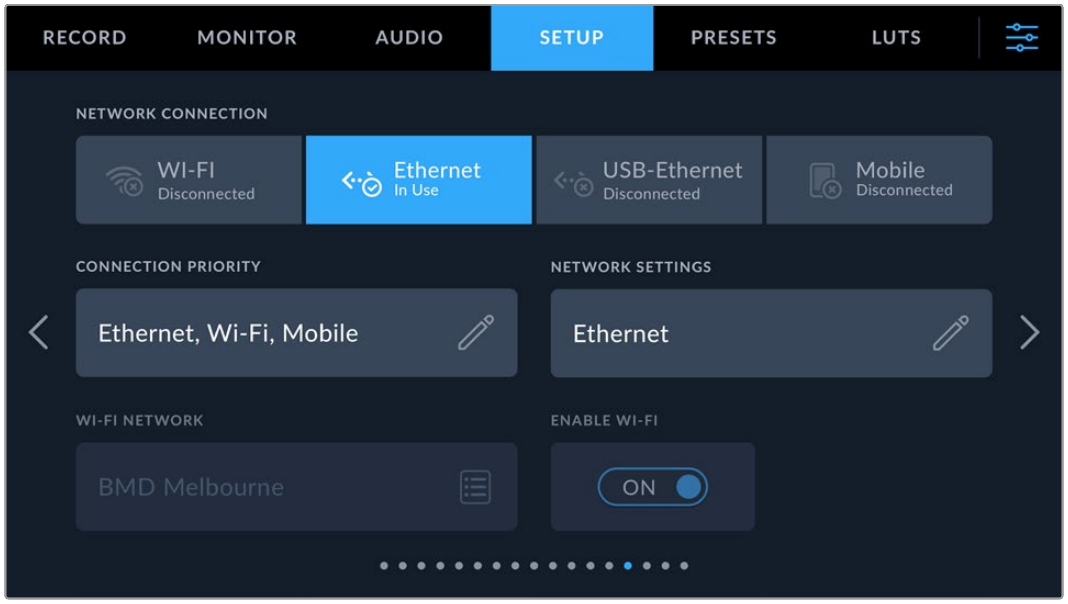

2 Tap the WiFi icon and then tap on the ‘enable WiFi’ setting to turn it on.

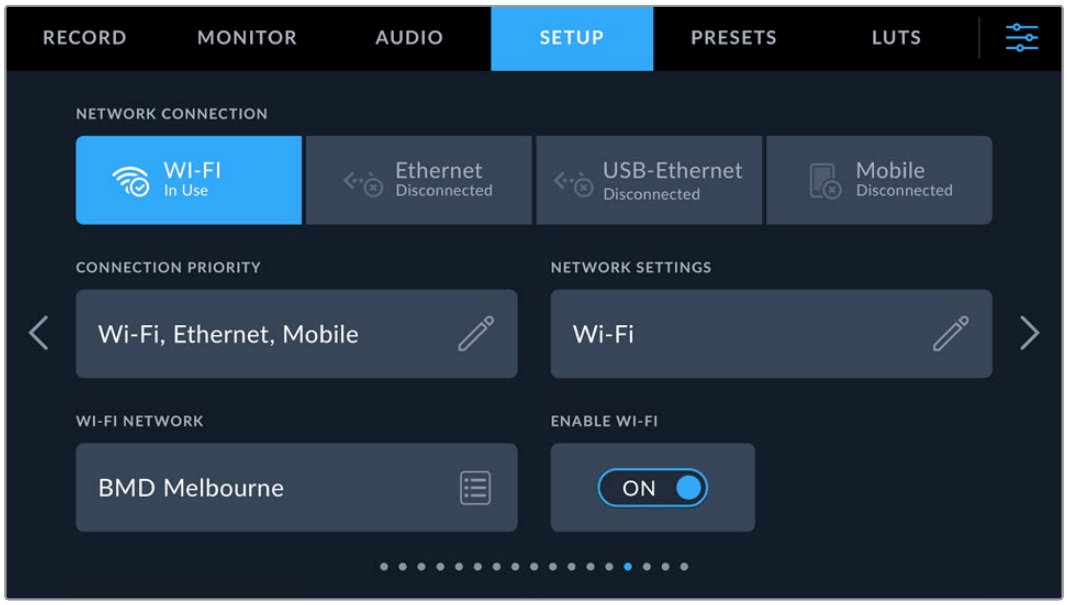

3 Tap the WiFi network box to open a list of available networks.

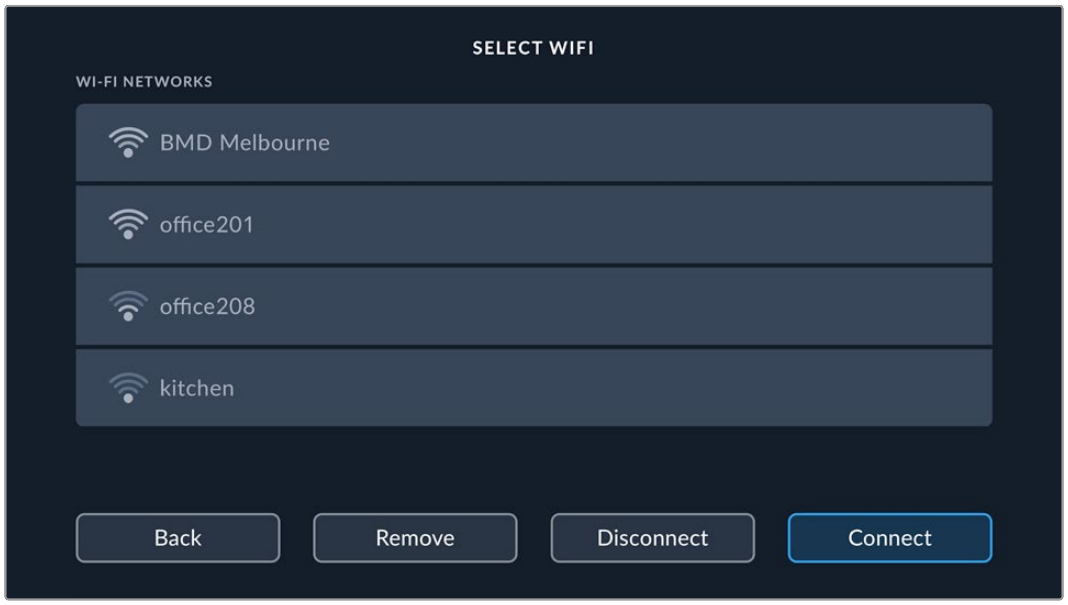

4 Tap on the desired network router in the list and then tap ‘connect’.

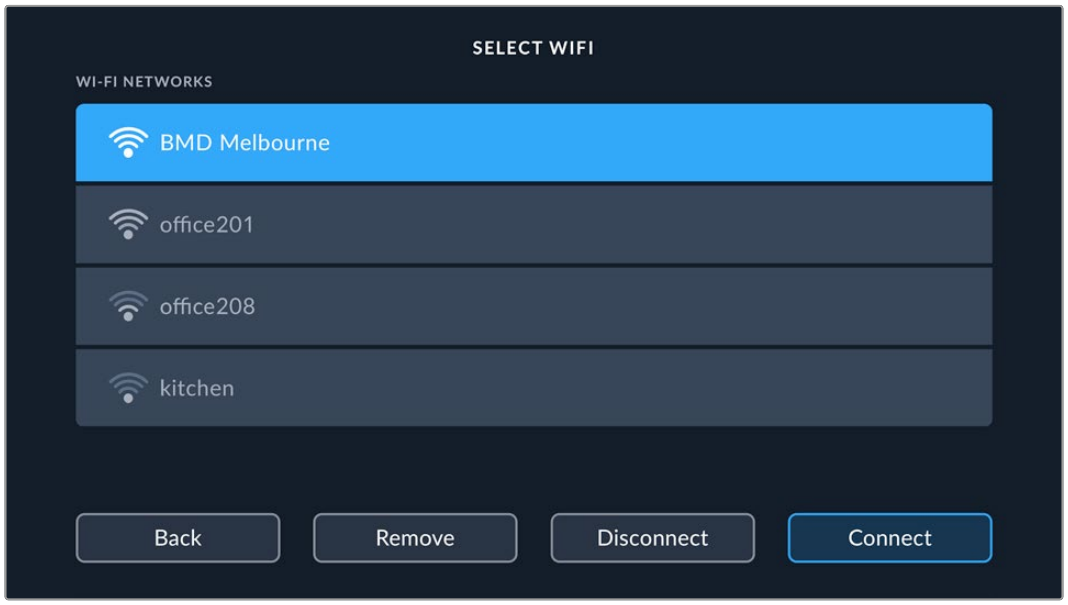

5 Type in your password and tap ‘enter’.

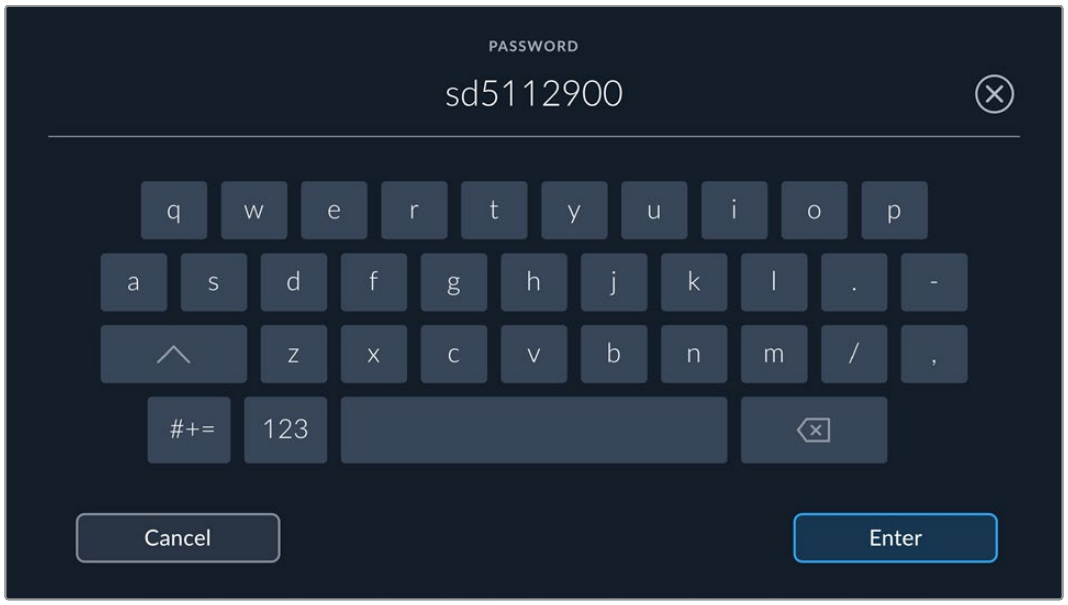

URSA Cine will now connect. If any of the other connection types are selected, you will see the WiFi icon is illuminated blue to indicate you are connected wirelessly. That's all you need to do! When you are finished with the WiFi connection, simply turn it off by setting 'enable WiFi' to 'off'.

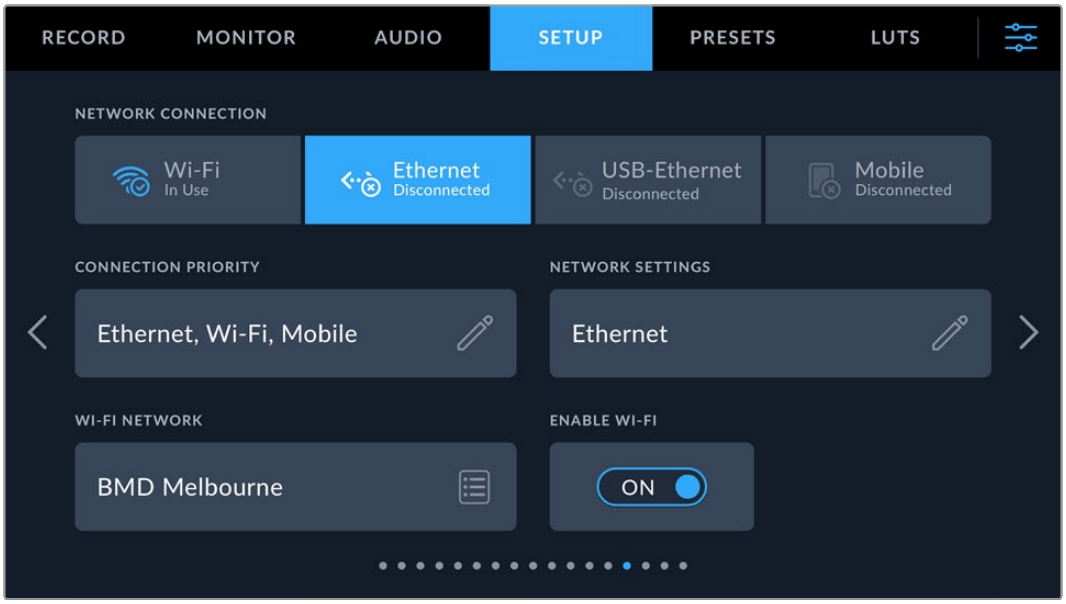

Streaming Video

URSA Cine has its own built in streaming engine that enables the camera to stream directly to platforms such as YouTube, Facebook Live and Twitch.

You can also connect URSA Cine to a monitor or television on the same local network, or via the Internet anywhere in the world using an optional Blackmagic Streaming Decoder, ATEM Television Studio HD8 ISO or ATEM Mini Extreme ISO G2 model switcher. This can be done using WiFi or Ethernet from URSA Cine to your local network router, or using USB to access the cellular data link on your cell phone.

Below are three examples showing different ways to stream to an external HDMI monitor using a Blackmagic Streaming Decoder.

Connecting via WiFi

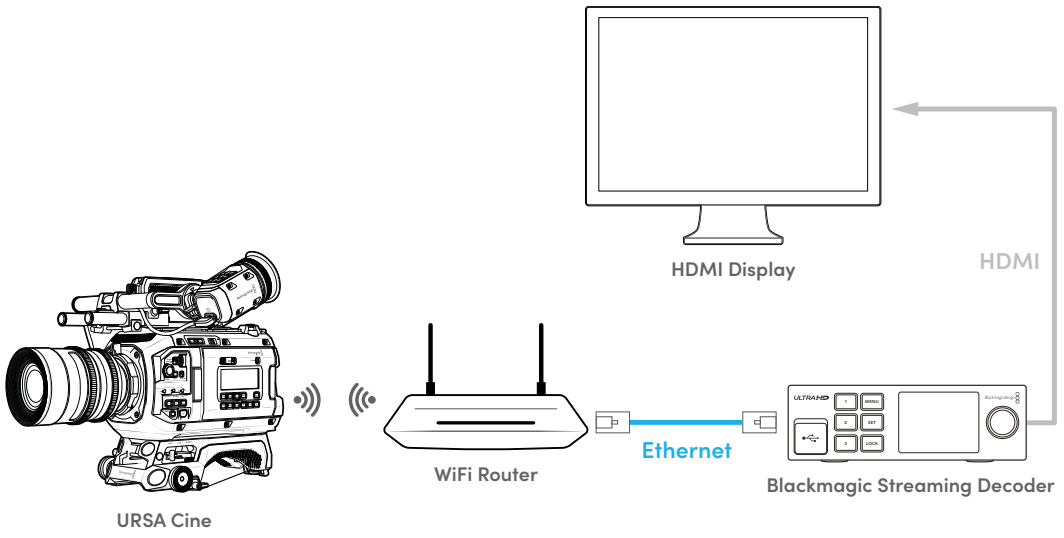

Connecting over the Internet

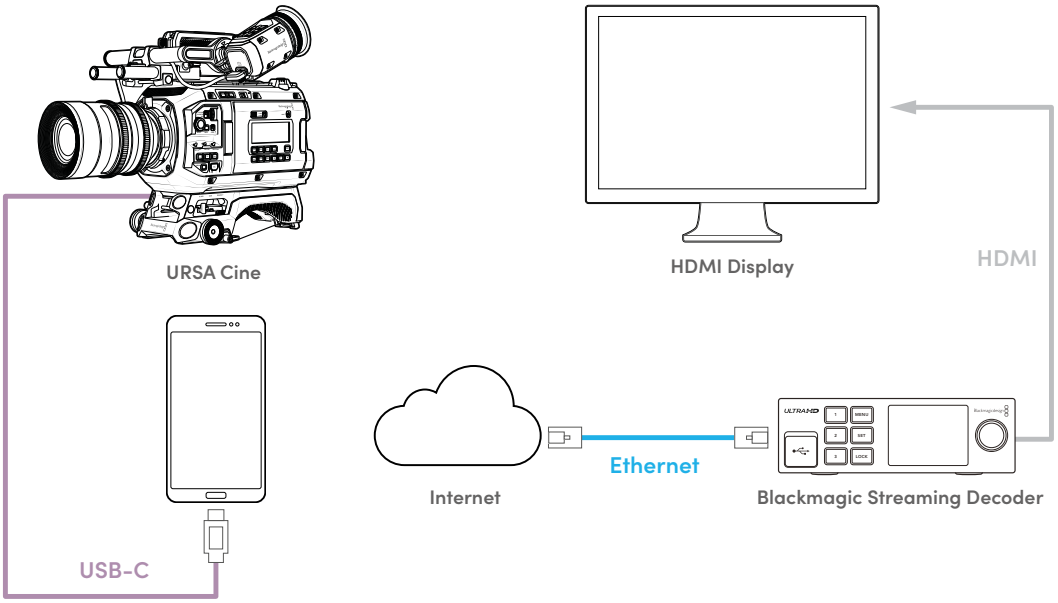

Connecting over a Network

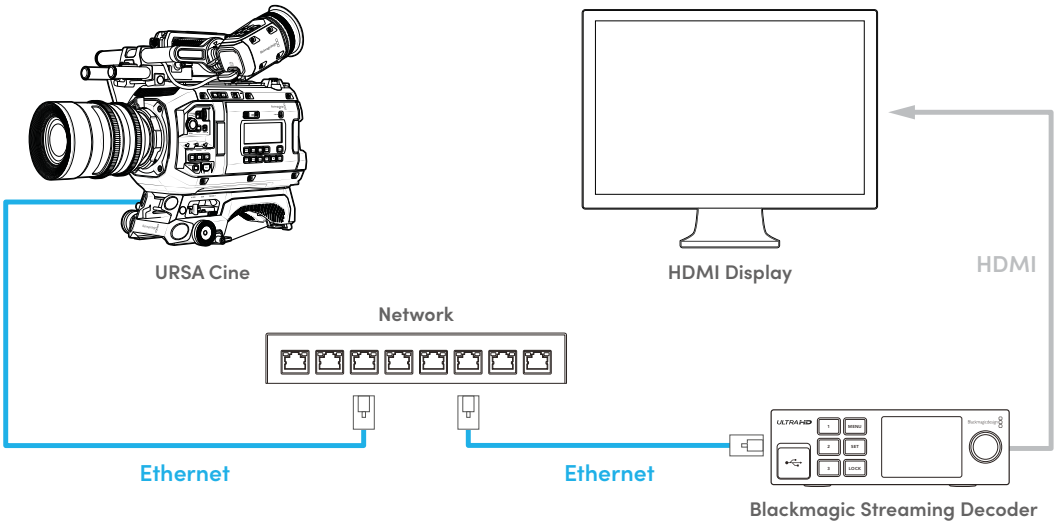

To stream to a monitor on set all you need to do is:

1. Ensure your URSA Cine is set to DHCP.
2. Connect your URSA Cine to an existing local network via WiFi or Ethernet.
3. Plug your Blackmagic Streaming Decoder into the same network.
4. Connect the Blackmagic Streaming Decoder to your computer via USB and use the Blackmagic Streaming Setup utility to ensure it is set to stream to a local network without key.

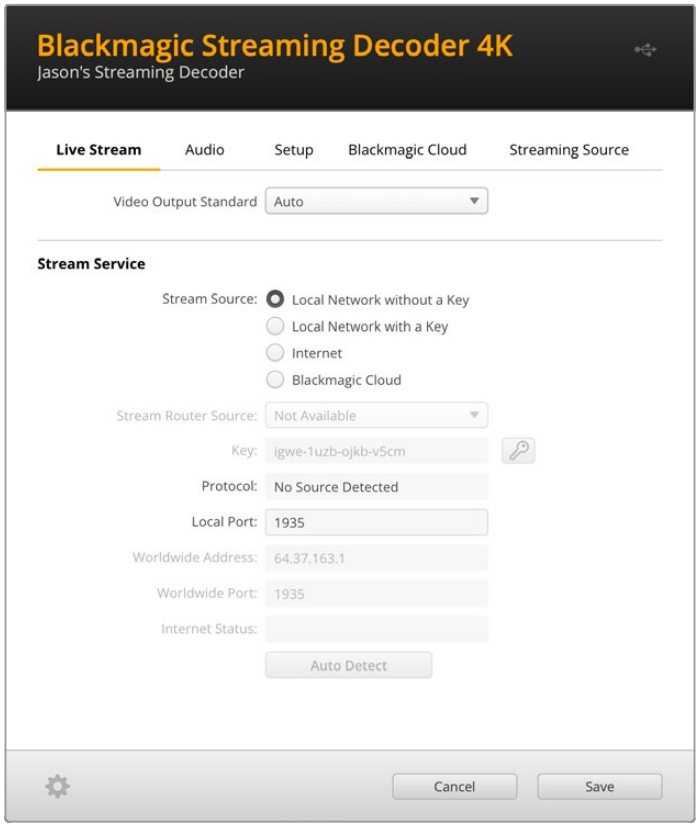

Once this is done, provided both are on the same network URSA Cine will be able to detect the streaming decoder and show it as a streaming platform in page 9 of your camera's setup settings. Simply select the streaming decoder as a platform and begin streaming to it by toggling the 'stream' button.

You will know streaming is active because the stream encoding data rate box will indicate data is being sent and an image will appear on the display connected to your Blackmagic Streaming Decoder.

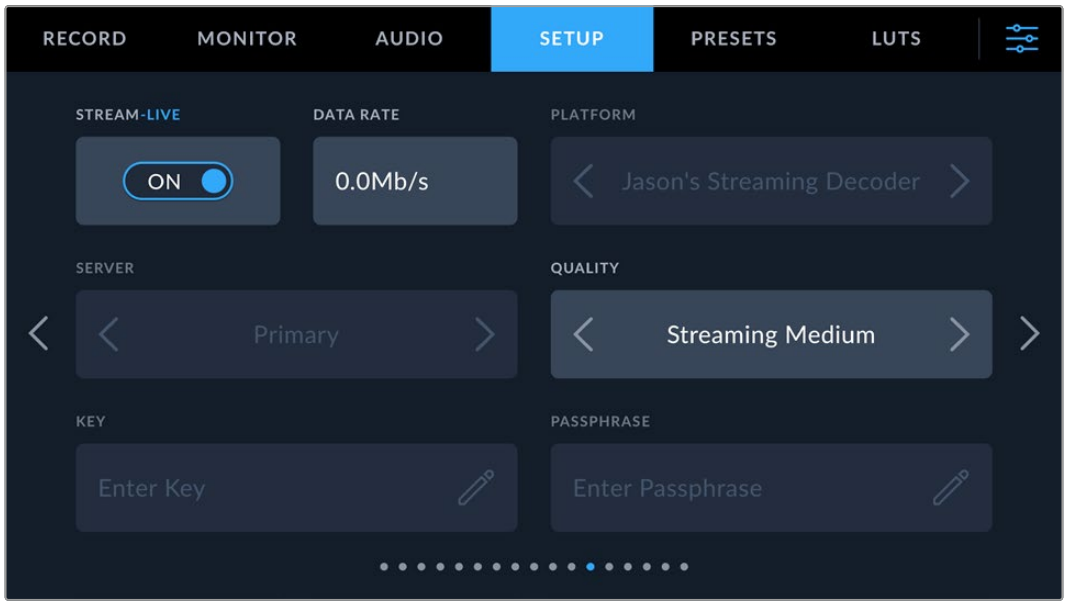

Smartphone Setup

Connect a smartphone to your camera's USB-C expansion port on the top rear using a USB-C cable. This connection lets you set up fast and be streaming to the world in any location where your smartphone has a 4G or 5G cellular connection.

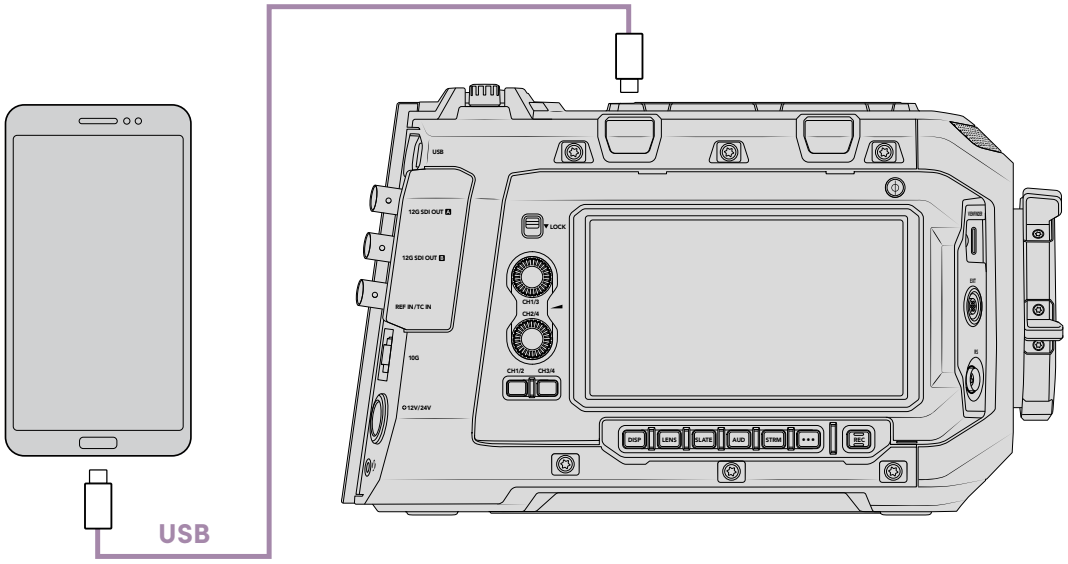

Smartphone Settings

The first step to setting up your smartphone for internet streaming is to make sure it has hotspot activated.

1. On your iOS device open settings>personal hotspot and make sure the 'allow others to join' option is on.
2. You will see a message appear asking whether to trust the connected computer. Select 'trust' and a green tethering icon will be visible on the screen. This is how you can verify the connection is working.

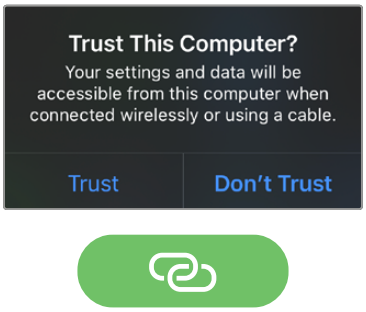

Your smartphone's clock will always appear within a green background icon while tethering is enabled.

For Android devices, swipe the screen to display the quick menu. Press and hold the hotspot icon and then turn on USB tethering.

TIP Once you have finished streaming, we recommend turning off tethering on your phone to save your phone's battery life.

Setting the ATEM Camera ID

URSA Cine can also stream to an ATEM Television Studio HD8 ISO or ATEM Mini Extreme ISO G2 model switchers with tally, record trigger and basic camera control functionality. For this, you will need to set the ATEM Camera ID in the URSA Cine setup settings.

For more information on setting your camera's ATEM Camera ID, refer to the 'Setup Settings' section earlier in this manual.

Creating the XML File

To create an XML settings file connect Blackmagic Streaming Decoder to the internet by plugging a network cable from the 'Ethernet' port to an internet router or network switch.

Connect Blackmagic Streaming Decoder to your computer using a USB-C cable and launch ATEM Setup.

In the setup tab, confirm the network settings are correct and select 'Internet' from the 'stream service' options. You should see a 'visible worldwide' message in the internet status box. This means everything is working correctly.

A Note About Port Forwarding

If you see a port forwarding or UPnP error in the 'internet status' box you will need to ask your internet provider or network administrator to set up port forwarding on your internet connection to 'TCP port 1935'.

Exporting the XML File

Once you have confirmed your settings in the Blackmagic Streaming Setup utility and have successfully connected your Blackmagic Streaming Decoder to your network or the internet, you can export the XML setup file.

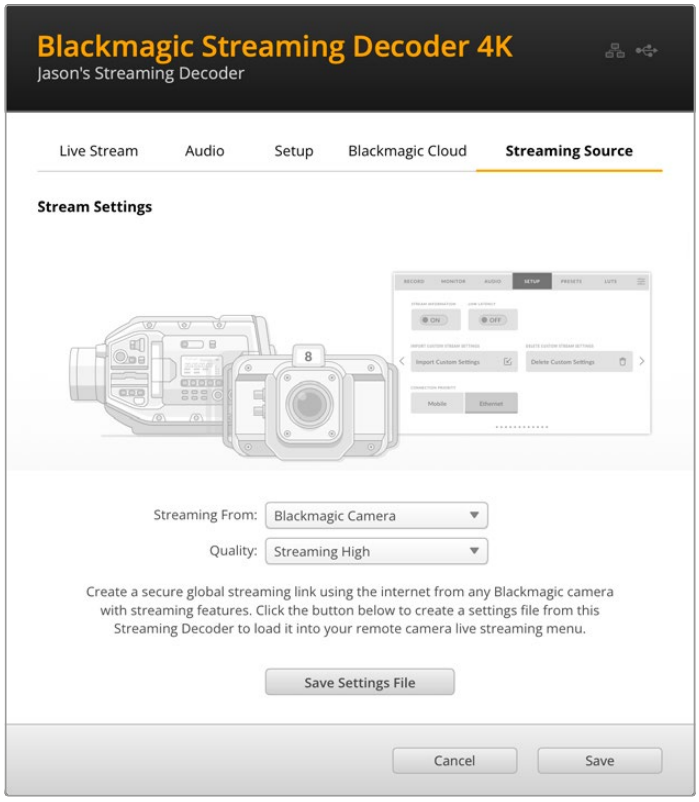

1. Click the 'streaming source settings' tab in the top right of the window.
2. Select where you will be streaming from. In this case, choose 'Blackmagic Camera'.
3. Select the quality you want to stream. This setting will set the quality setting in the remote URSA Cine.
4. Click the 'save settings file' button, choose a location on your computer to save the XML file and click 'save'.
5. You can now email the saved XML file to the remote operator.

Loading the XML File

To import an XML settings file in to your URSA Cine, copy the file to a media module, CFexpress card, or USB-C flash disk.

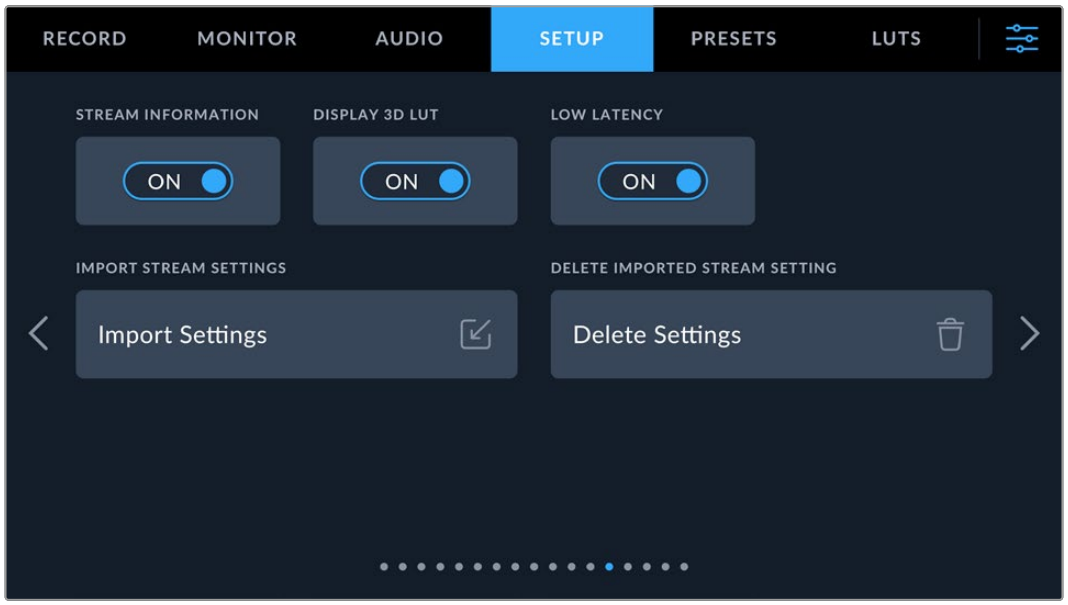

1. On the tenth page of your camera's setup menu, tap on the button labeled 'import stream settings'.
2. At the top of the screen, tap the storage media where the xml settings file is saved. Tap the file name and then tap 'import'. After the setup file has been successfully imported, the Blackmagic Streaming Decoder will automatically be selected in your camera's platform menu.

   All you need to do now is tap your camera's live stream button to turn the stream 'on'.

Setup Settings Page 15

The fifteenth page of your camera's 'setup' tab contains options to allow remote control and monitoring of your URSA Cine via a smartphone or iPad using the Blackmagic Camera iOS or Android app.

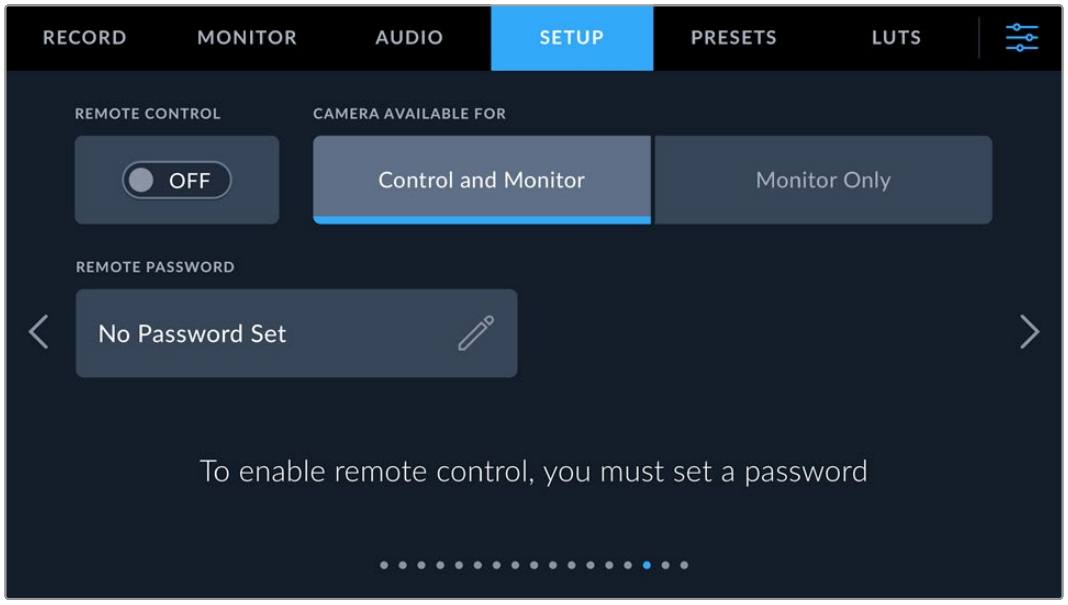

You can connect your URSA Cine to the Blackmagic Camera app by connecting your camera and smartphone to the same network, or by connecting your smartphone to the top rear USB-C port on your URSA Cine.

You can monitor and control the camera wirelessly from your phone using the Blackmagic Camera app provided your phone is connected to the same WiFi network your camera is connected to.

To allow remote control:

1. In your URSA Cine's setup menu, tap the pencil icon in the 'remote password' field and enter a password for your URSA Cine. Tap 'update'.
2. Switch the 'remote control' switch to 'on'.
3. Choose if you want to allow the Blackmagic Camera app to 'control and monitor' or 'monitor' your URSA Cine. When 'control and monitor' is selected, you will be able to access your camera's settings and start and stop recording via the Blackmagic Camera app.

To end a remote connection from the Blackmagic Camera app, set the 'remote control' switch to 'off'.

Setup Settings Page 16

The sixteenth page of your URSA Cine's 'setup' tab contains the following settings.

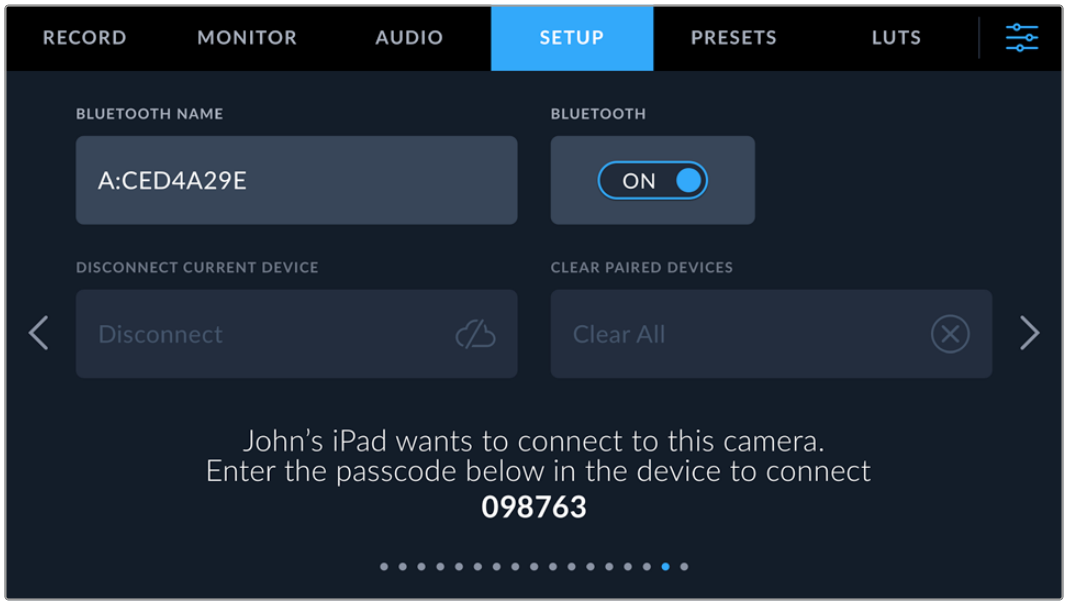

The camera Bluetooth name will be the letter of your camera as selected in the slate, followed by the 8 character hardware ID for your URSA Cine

Bluetooth®

Bluetooth control allows you to control your camera wirelessly from portable devices. Using the 'Blackmagic Camera Control App' for iPad you can change settings, adjust metadata and trigger record remotely. You can enable or disable Bluetooth by tapping the 'Bluetooth' switch icon in the 'setup' menu. When Bluetooth is enabled, the camera can be detected by Bluetooth devices up to 30 feet away. It's important to mention for URSA Cine's Bluetooth control to work correctly you need to connect your camera's WiFi antennas to their antenna points on the top panel towards the rear of the unit.

Because URSA Cine uses the same set of commands for Bluetooth control as it does for 'Blackmagic SDI Camera Control Protocol', you can write your own applications to control almost every setting in the camera remotely, from monitoring to audio settings, the camera's built in DaVinci Resolve color corrector or lens control.

For more information see the ‘Blackmagic SDI camera control protocol’ section in this manual.

Setup Settings Page 17

The seventeenth page of your URSA Cine’s ‘setup’ tab contains the following settings.

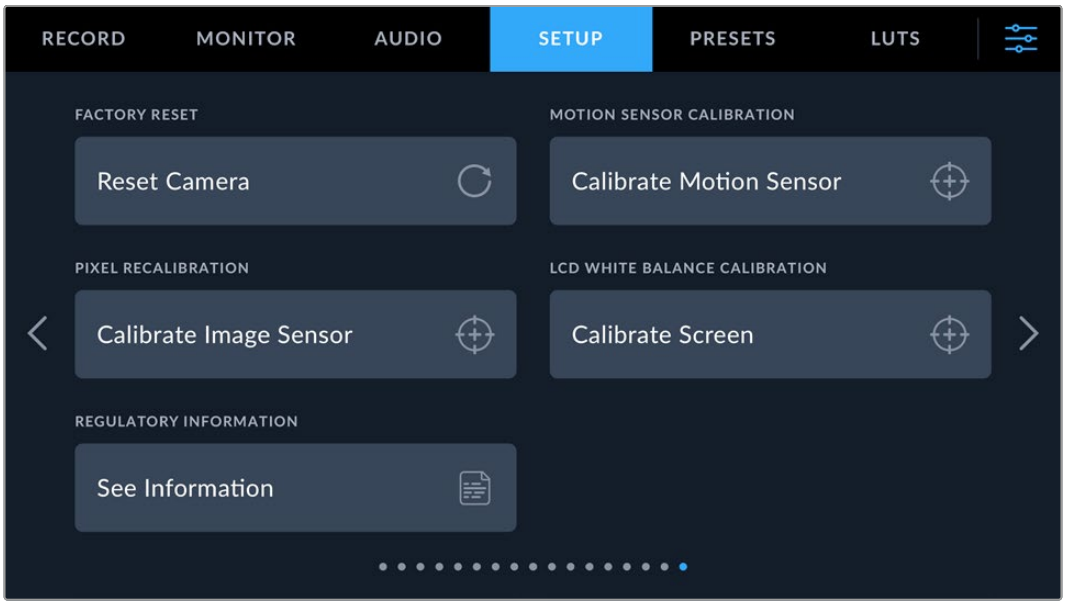

Factory Reset

To reset the camera to its default factory settings, tap the ‘reset camera’ button. You will be asked to confirm this action as it will erase any LUTs and presets currently stored on the camera. Tap ‘reset’ on the confirmation page to reset your camera settings.

It’s important to note that a factory reset erases any presets and custom LUTs, and resets all settings. It is a good practice to export them to a memory card as a backup before performing a factory reset. After a factory reset, you can restore your presets and LUTs quickly by importing them from the memory card.



When selecting ‘factory reset’ you will be prompted to confirm your action

Motion Sensor Calibration

To calibrate the horizon meter on URSA Cine, place your camera on a surface you know is level and tap the ‘calibrate motion sensor’ button. It is essential that you keep the camera stable during calibration. This is to ensure that the recorded motion sensor metadata in the Blackmagic RAW files during filming is accurate. The process takes approximately five seconds to complete.

The horizon can be set off center if needed. For example, if you want to set the tilt at a consistent angle, calibrate the motion sensor with the camera at the angle you want, then use the horizon meter to maintain the same angle.

The motion sensor data can be used in DaVinci Resolve to stabilize clips. Refer to the ‘gyro stabilization’ section for more information.

Pixel Recalibration

The image sensor used in your URSA Cine is made up of millions of pixels that respond to light. As a result, the pixels become more visible and gradually forms what is commonly known as ‘hot pixels’. All camera sensors, regardless of manufacturer, will develop this variation in pixel brightness over time.

To solve this, URSA Cine has a built in recalibration feature that you can run if you see any pixels that are brighter than others.

To begin the recalibration process:

1. Attach the lens cap and run the pixel recalibration feature by tapping the ‘calibrate image sensor’ button.

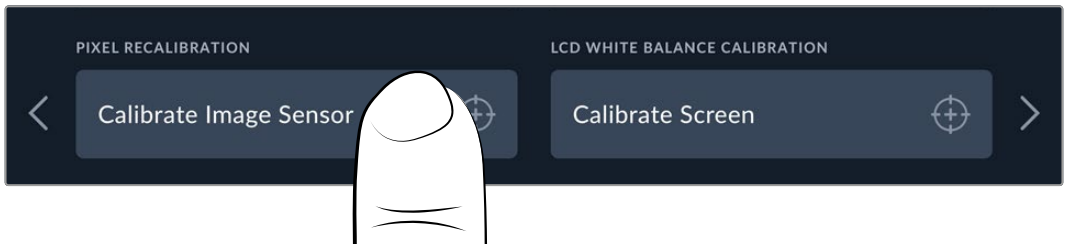

2. Tap ‘calibrate’ to confirm your choice.



The process takes approximately one minute to complete and the LCD may appear black for a few moments.

3 When the recalibration process is complete, a notification will let you know when your camera is ready to use. Tap ‘OK’ to return to the menu.

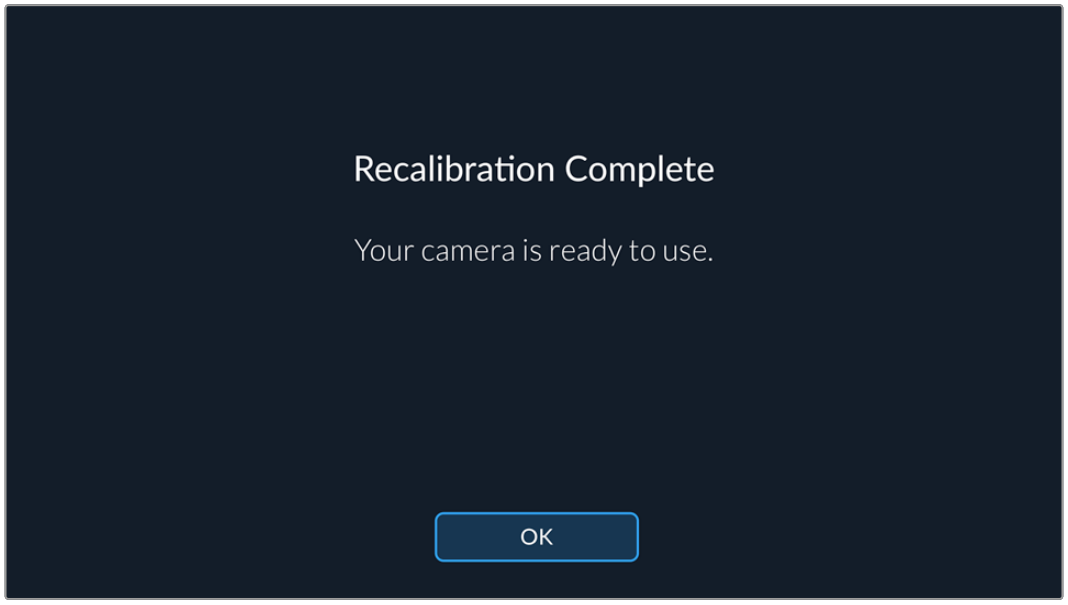

LCD White Balance Calibration

To perform LCD white balance calibration, adjust the ‘LCD temperature’ and ‘LCD tint’ controls so that the two reference patches look neutral. After you change the settings, you can use the ‘reset’ button to return the controls to the factory calibration. The ‘restore’ button brings back your new settings, which helps you compare the appearance before and after calibration. When the LCD shows an accurate white balance, save your settings.

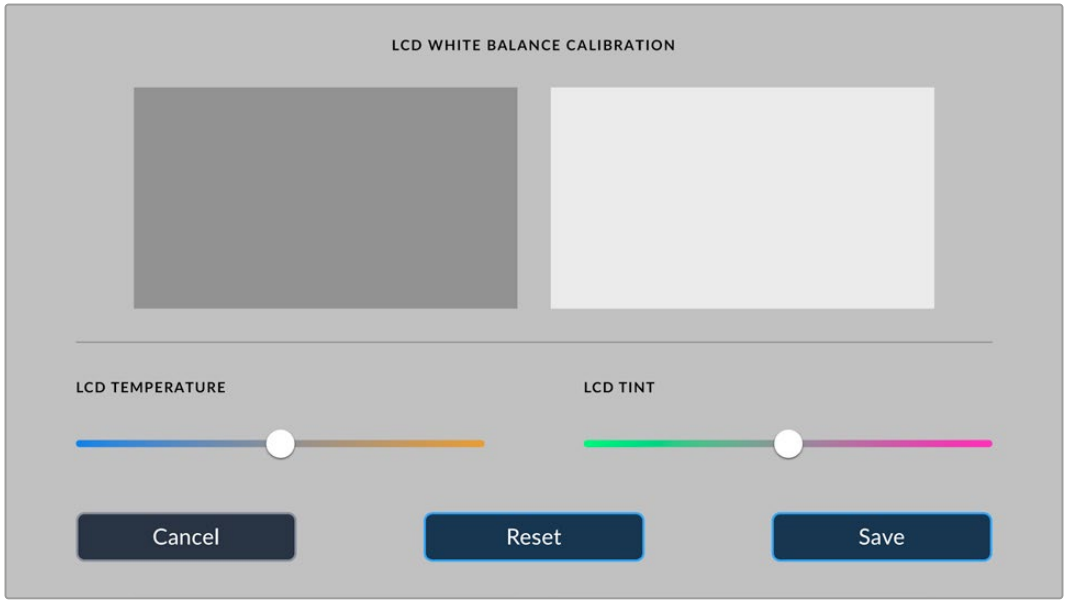

Regulatory Information

To see the regulatory information on your URSA Cine simply press the ‘see information’ button in setup page 14. This will show a page containing the logos and IDs for regulatory compliance that URSA Cine has been approved for. For the most up to date information please ensure that your URSA Cine is updated and is running the latest software version.

For more information, refer to the regulatory notices and safety information sections near the end of this manual.

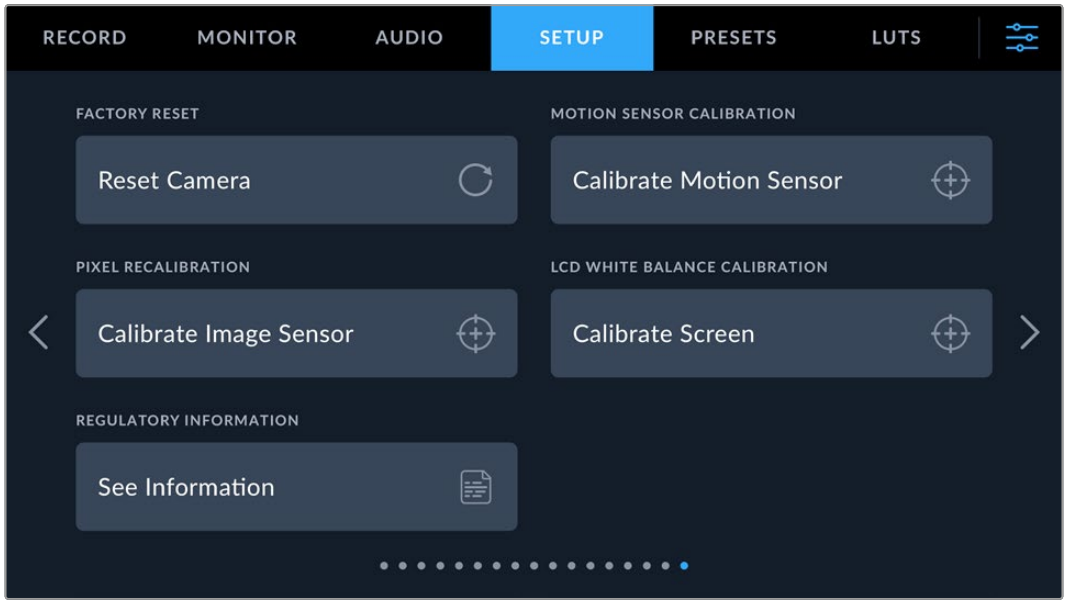

Presets

The ‘presets’ tab lets you save and recall a complete collection of settings for your URSA Cine. This is very useful when one camera is used for multiple projects or different lens setups. For example, you may have a preset for anamorphic lenses, one for spherical lenses, or other presets for different frame rates. All settings are saved in each preset and you can easily switch between them.

You can also import and export presets, which is very useful for setting up a multi camera shoot. Simply set up one URSA Cine to suit your project, then export that preset for all the other URSA Cine cameras on set.

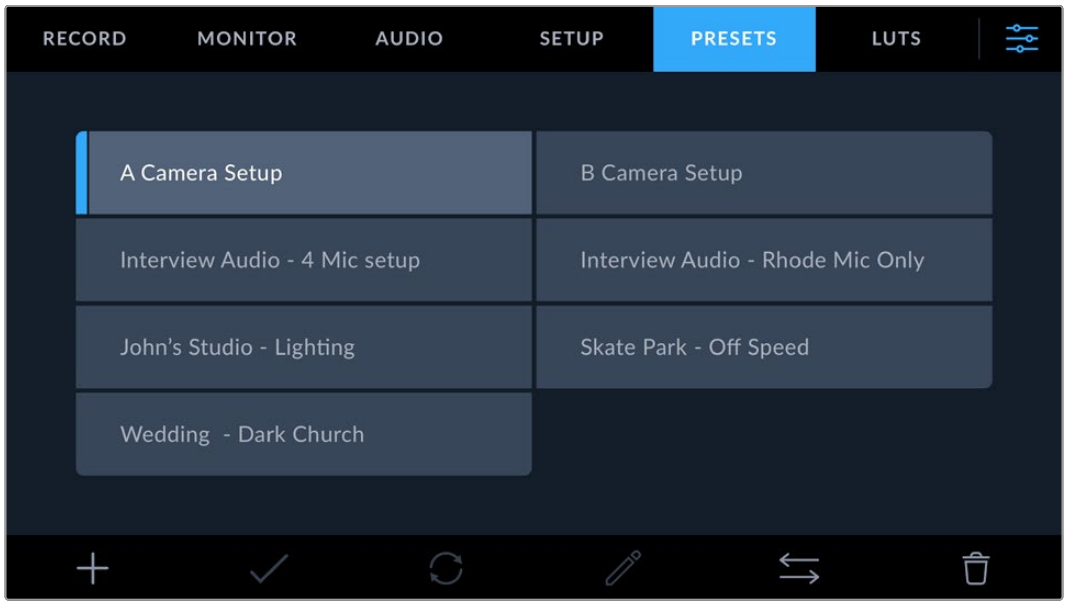

Your URSA Cine’s ‘presets’ tab

NOTE Your URSA Cine can save up to sixty presets to its internal memory.

Preset Buttons

The button icons along the bottom of your URSA Cine's 'presets' menu correspond with the following functions.

					
Add	**Load**	**Update**	**Edit**	**Manage**	**Delete**

Saving and Loading Presets

To create a new preset, tap the 'add' icon. This will open a touch keyboard on your LCD touchscreen where you can name your preset. Once you've typed in the name, tap 'update' to save all of your URSA Cine's current settings to that preset.

If your camera already has a preset loaded with the same name, you will be prompted to overwrite the existing preset or keep both.

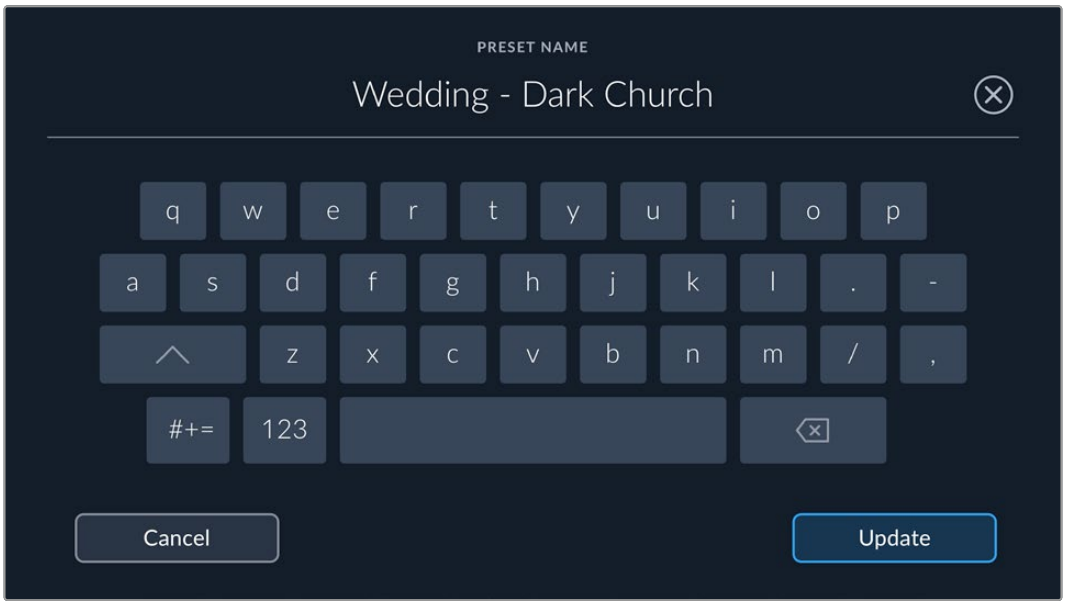

Enter a name for your preset by tapping the 'add' icon in the preset tab and using the touch keyboard

Once you have a preset saved, tap its name in the presets menu to select it. To load it tap the 'load' icon.

You can update a preset by tapping the 'update' icon. This will bring up a prompt asking you if you want to update the preset with your URSA Cine's current setting. Tap 'update' to confirm.

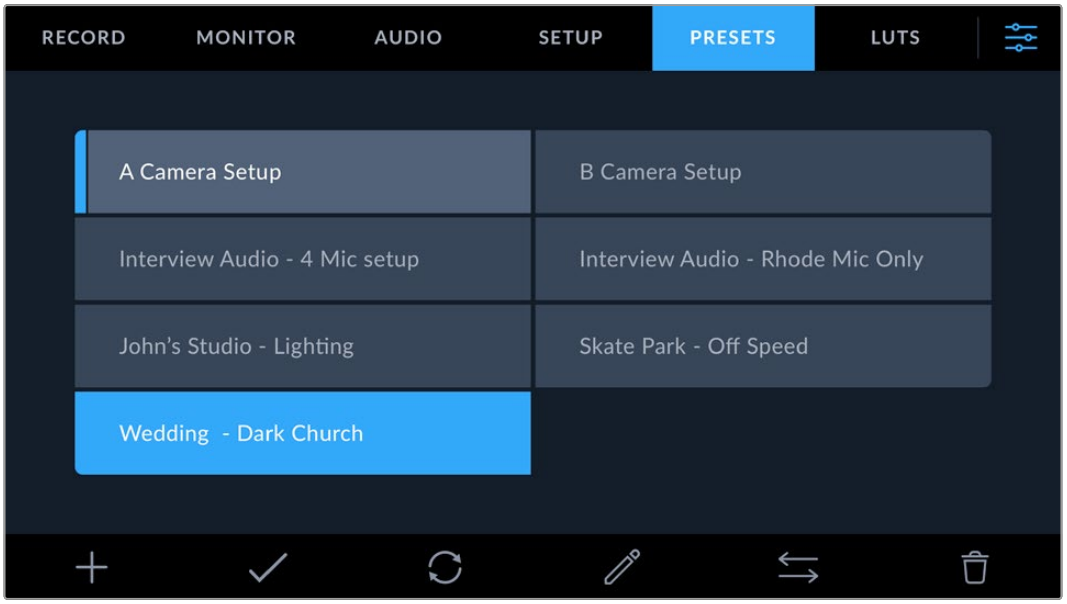

Select a preset and tap the 'load' icon to load it. Selected presets will appear solid blue, while currently loaded presets have a blue line on the left of their icon

Importing Presets

To import a preset, tap the 'manage' icon at the bottom of the presets menu. Select the storage media where your presets are saved.

Confirm your selection by tapping the 'import' button. This will bring up the import screen. You can use the buttons at the top left of this screen to display any available presets in the storage media.

Your URSA Cine will search the root directory and 'presets' folder on the selected storage media. It's worth noting that presets saved elsewhere on your storage media will not be visible.

Tap a preset to select it and tap 'import' to confirm. If the preset you want to import has the same name as a preset already saved to your camera, you will be prompted to overwrite the existing preset or keep both. At the top right of this screen, you'll see the number of remaining empty preset slots available on your camera.

NOTE If your URSA Cine's preset slots are full, the import menu will not be available. You will need to delete an existing preset to make room.

Exporting Presets

To export a preset to storage media, select the preset you want to export by tapping it and tap the 'manage' icon.

From the 'manage preset' options choose 'export selected preset'. Use the storage media selection switch to choose the storage media you would like to export the preset to. From the 'export to' options tap the card or drive you would like to export your preset to. Confirm your choice by tapping 'export'.

If the storage media you've chosen already has a preset saved to it with the same name as the one you're exporting, you will be prompted to overwrite the preset on the card, or keep both presets.

Deleting Presets

Your URSA Cine has space for sixty presets. To delete a preset, select it and tap the ‘delete’ icon. You will be prompted to confirm your choice. Tap ‘delete’ to confirm.

LUTS

The ‘LUTS’ menu lets you import, export and apply 3D LUTs to your camera’s recordings and outputs.

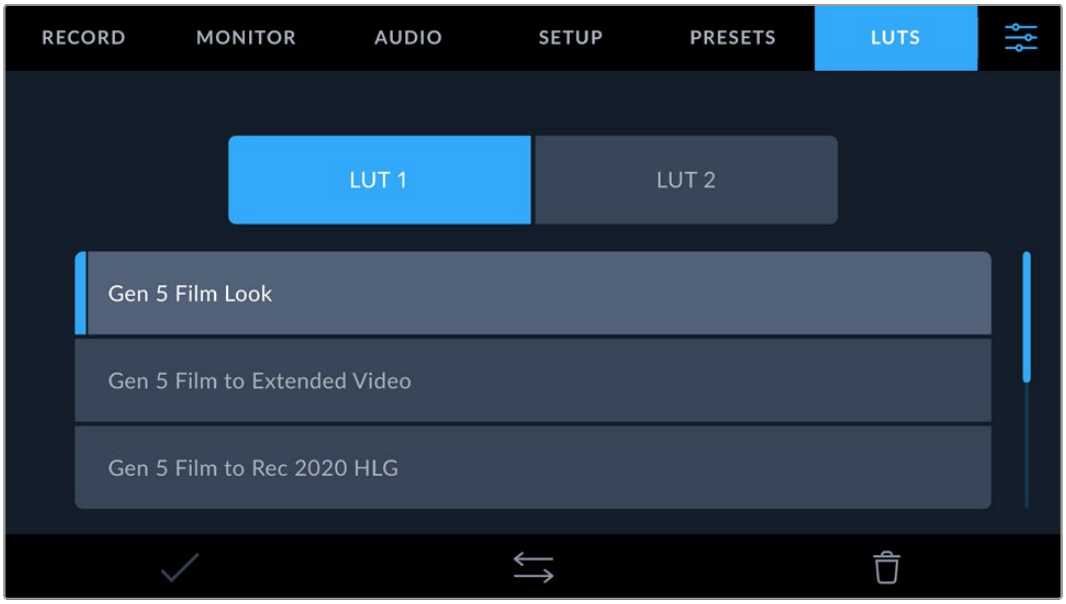

The LUTs tab provides a range of 3D look up tables and you can add your own

Introducing 3D LUTs

Your URSA Cine can apply 3D LUTs to images on the touchscreens and all outputs. LUTs work by telling your camera what color and luminance output to show for a particular color and luminance input. For example you may want to record internally in camera with normal color but send a preview out to your monitors and switcher of what broadcast legal colors for your region will look like. This is also useful when shooting Blackmagic RAW footage or using ‘film’ dynamic range, both of which have an intentionally undersaturated, ‘flat’ appearance. By applying a LUT, you can get an idea of what your footage will look like after it has been graded.

It is easy to create 3D LUTs using DaVinci Resolve or other color correction software, and LUTs are available online from a variety of sources. Your URSA Cine can store up to thirty 17 point or 33 point 3D LUTs, of up to 1.5 megabytes each. Once loaded, you can choose to display a given LUT on any of your camera’s outputs.

Your URSA Cine supports 33 point 3D LUTs in .cube format created in DaVinci Resolve and 17 point 3D LUTs converted to Resolve .cube format via LUT conversion programs. Your camera processes 3D LUTs using high quality tetrahedral interpolation.

For more information on displaying LUTs, see the ‘monitor settings’ section in this manual.

Built in LUTs

Your URSA Cine provides a number of built in LUTs, that allow you to preview different looks whilst shooting in ‘film’ dynamic range or when shooting Blackmagic RAW.

URSA Cine 17K and URSA Cine 12K models with generation 5 color science selected include the following 3D LUTs.

Gen 5 Film Look

The Gen 5 Film Look LUT is a high contrast stylized look which provides the same color and gamma to the default starting point you will get when you use DaVinci Resolve's film look creator plug in.

Gen 5 Film to Extended Video

Displays a wider dynamic range than the 'film to video' LUT, and applies a mild contrast change with a smooth roll off in the highlights.

Gen 5 Film to Rec 2020 Hybrid Log Gamma

Displays a gamma curve that is suitable for HDR screens and compatible with standard dynamic range screens.

Gen 5 Film to Rec 2020 PQ

Displays a gamma curve that is based on what we can perceive with our eyes, for efficient encoding of HDR images.

Gen 5 Film to Video

Similar to the REC 709 color standard for high definition video, and has a high level of contrast and saturation. You may find this setting useful when using Blackmagic URSA Cine alongside other broadcast cameras using the REC 709 color space.

The following LUTs are included for URSA Cine 12K models with generation 6 color science selected.

Gen 6 DaVinci to Rec709 BT1886

Technical transform from DaVinci Wide Gamut Intermediate to suit Rec709 BT1886 for SDR display delivery.

Gen 6 DaVinci to Rec2020 HLG

Technical transform from DaVinci Wide Gamut Intermediate to suit Rec2020 HDR screens, also compatible with standard dynamic range screens.

Gen 6 DaVinci to Rec2020 PQ

Technical transform from DaVinci Wide Gamut Intermediate to Rec2020 that is based on what we can perceive with our eyes, for efficient encoding of HDR images with the SMPTE ST-2084 Perceptual Quantizer (PQ) transfer function.

Gen 6 DaVinci to P3-D65 PQ

Technical transform from DaVinci Wide Gamut Intermediate to suit the HDR video format that combines the P3 color primaries and D65 white point with the SMPTE ST-2084 Perceptual Quantizer (PQ) transfer function.

Gen 6 DaVinci to Rec709 BT1886 (Film Look)

A stylized creative LUT based on the 'Aurora' setting in the Film Look Creator suited for Rec709 SDR displays.

Gen 6 DaVinci to Rec2020 HLG (Film Look)

A stylized creative LUT based on the 'Aurora' setting in the Film Look Creator plug-in suited for Rec2020 HDR screens, also compatible with standard dynamic range screens.

Gen 6 DaVinci to Rec2020 PQ (Film Look)

A stylized creative LUT based on the 'Aurora' setting in the Film Look Creator plug-in suited for Rec2020 that is based on what we can perceive with our eyes, for efficient encoding of HDR images.

Gen 6 DaVinci to P3-D65 PQ (Film Look)

A stylized creative LUT based on the ‘Aurora’ setting in the Film Look Creator plug-in suited for P3 color primaries, D65 white point with the SMPTE ST-208 Perceptual Quantizer (PQ) transfer function.

LUT 1 and LUT 2

URSA Cine 12K LF has two independent LUT slots that can have different LUTs selected. For example, you can assign LUT 1 to SDI A and LUT 2 to SDI B. This can be helpful when you want to monitor HDR on one SDI output and SDR on another, or have a technical transform LUT on SDI A and a creative look assigned to SDI B.

Use the LUT selection buttons and the ‘load’, ‘manage’ and ‘delete’ icons at the bottom of the LUTs page to choose the LUTs you want to use, load new ones, delete LUTs and assign them to LUT 1 or LUT 2.

LUTs Buttons

The button icons along the bottom of your URSA Cine’s ‘LUTS’ screen correspond to the following functions:

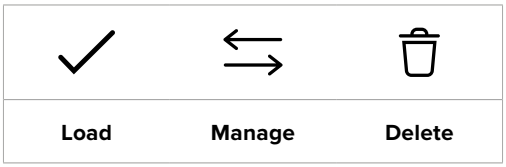

Importing LUTs

To import a 3D LUT, tap the ‘manage’ icon at the bottom of the LUT menu. Select either the card or drive with the storage media selection switch, depending on where your LUTs are saved.

Tap the card or drive that contains the LUT you want to import from the ‘import from’ menu and tap the ‘import’ button. From the import screen you can use the buttons on the top left to display any available LUTs on other cards or drives attached to your camera.

Your URSA Cine will search the root directory and ‘3DLUTS’ folder on your selected storage media. Any LUTs you have saved elsewhere will not be visible.

Tap a LUT to select it and tap ‘import’ to confirm your selection. The LUT will be saved to your camera.

NOTE If your URSA Cine’s thirty 3D LUT slots are full, you will not be able to import until you delete some existing LUTs to make space.

If the LUT you want to import has the same name as a LUT already saved to your camera, you will be prompted to overwrite the existing LUT or keep both. At the top right of this screen, you’ll see the number of remaining empty LUT slots available on your camera. You will only be able to import as many LUTs as you have free slots on your camera.

NOTE If you are having trouble importing a LUT to your URSA Cine, it may be the wrong size. You can use a LUT editor like Lattice to check its size, or open it in any text editor on your computer. Next to the tag ‘LUT_3D_SIZE’ will be a number indicating the LUT’s size. If this value is not 17 or 33, you can use Lattice to resize your 3D LUT to 17 points.

Applying a LUT

Once you have a LUT saved onto your camera, tap it in the LUT menu to select it, and tap the 'load' icon. This will enable that LUT to all outputs on your camera. However, you will still have to turn 'display LUT' on in the monitor menu for each output to apply it. See the 'monitor settings' section in this manual for more information.

Applying a LUT to LUT Slot 1 or 2

Once you have a LUT saved on URSA Cine 12K LF:

1. Tap the LUT 1 or LUT 2 buttons to select the LUT slot you want assign a LUT to. For this example, tap LUT 1.
2. Tap the LUT you want to use from the list.
3. Now tap the 'load' tick icon at the bottom of the page to confirm your selection.

You have now assigned a LUT to LUT slot 1. When you want to display that LUT on the camera's LCDs, an SDI output, the EVF or studio viewfinder all you have to do is go to the monitor settings and turn 'display 3D LUT' to 'on' for those outputs. You can also quickly swap between LUT 1 or LUT 2 on page 2 of the monitor settings.

Exporting LUTs

To export a LUT to storage, select the LUT you want to export and tap the 'manage' icon. From the 'manage LUT' options choose 'export selected LUT'. Use the storage media selection switch to select a card or drive, depending on the location you would like to export the LUT to.

From the 'export to' options choose the card or drive you want save your LUT to. Tap 'export' to confirm your choice. If a duplicate LUT is found on the card or drive you are exporting to, you will be asked if you want to overwrite the LUT or keep both.

Deleting LUTs

Your URSA Cine has space for thirty 17 point or 33 point 3D LUTs. To delete LUTs you are no longer using, or make room for more, select the LUTs you want to delete and tap the icon. You will be prompted to confirm your choice. Tap 'delete' to confirm.

Embedded 3D LUTs

When a 3D LUT is used whilst shooting Blackmagic RAW on URSA Cine, the selected LUT will be embedded into the Blackmagic RAW file that you are recording. The 3D LUT is actually saved with your recorded files in the header of the .braw file, and can easily be applied to footage in post production without needing to handle a separate file.

So when Blackmagic RAW files are delivered to an editor or colorist, they will be able to easily access the LUT that was used whilst filming, which greatly reduces the possibility that the wrong 3D LUT could be applied to a clip. They can then choose whether to apply the 3D LUT whilst editing or color grading the footage, and can disable the 3D LUT at any time.

When the 'Apply LUT in file' switch is set to 'on' in URSA Cine's 'record' menu, the recorded clip will open in Blackmagic RAW Player and DaVinci Resolve with the chosen 3D LUT already applied to it. The 3D LUT can then be easily toggled 'on' or 'off' but will always travel with the Blackmagic RAW file as it is written into the clip itself.

DaVinci Resolve also has an 'apply LUT' switch in the RAW settings palette for enabling or disabling the 3D LUT in the Blackmagic RAW file. The 'apply LUT' setting in DaVinci Resolve is the same setting as in the camera. This means that when shooting you can direct the colorist to use the LUT by setting it in the camera, but they can switch it off easily in DaVinci Resolve by setting 'apply LUT' to 'off'.

Entering Metadata

Metadata is information saved inside your clip, such as take numbers, camera settings and other identifying details. This is extremely useful when sorting and processing footage in post production. For example, take and shot and scene numbers are essential organizational tools, while lens information can be used to automatically remove distortion or better match VFX assets to plates.

Your Blackmagic URSA Cine automatically saves some metadata to each clip, such as camera settings, timecode, date and time. You can use your camera's slate to add many additional details.

The Slate

Pressing the 'slate' button on the assist station will open the slate on the assist station touchscreen. You can also swipe any touchscreen left or right to open the slate.

The slate is divided into three tabs: Clips, project and lens data. The 'clips' tab contains information that may vary clip by clip, while 'project' is where you enter details common between clips, such as the project name, director, and camera and operator ID. Lens data lets you enter information about the lens attached to your camera.

TIP Metadata entered into the slate is viewable on your URSA Cine's outputs when 'status text' is set to 'director' in the 'monitor' settings tab. See the 'monitor settings' section in this manual for more information.

'Clips' Metadata

Changes made to clip metadata work slightly differently in standby mode when your URSA Cine is ready to record, plus playback mode when you're reviewing footage you've already shot. In 'standby,' clip metadata will be saved to the next clip recorded, except for 'good take last clip' which refers to the most recently recorded clip.

In playback mode, clip metadata is always recorded to the current clip being viewed.

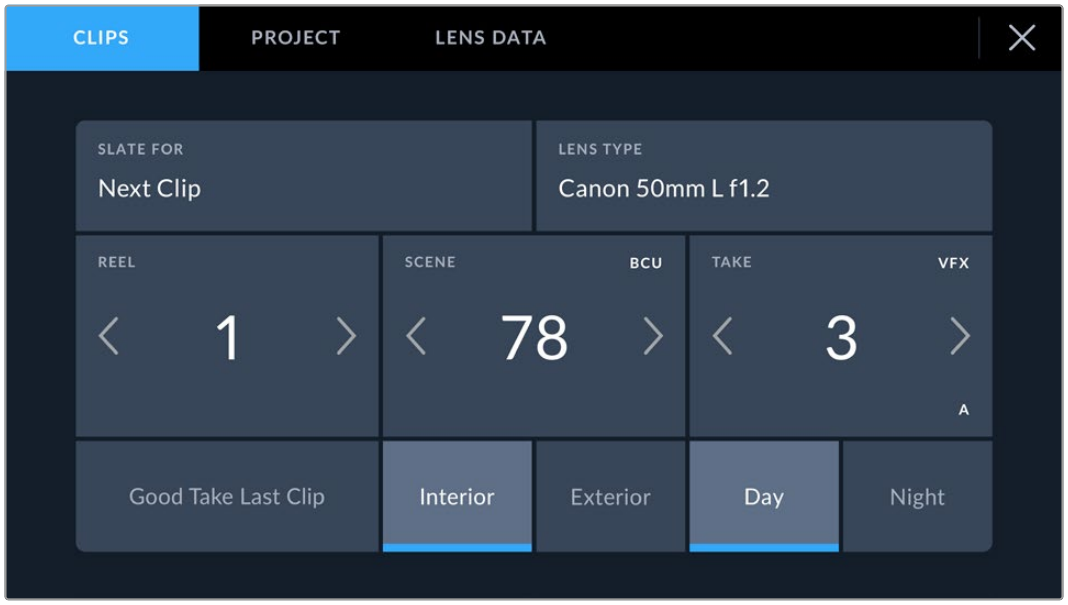

Your URSA Cine's slate is divided into 'clip', 'project' and 'lens data' tabs

Slate for

This setting shows the metadata saved for the current clip being played back. In standby mode, this refers to the next clip that will be recorded.

Lens Type

This field displays information about the lens used in the clip being played back, or the next clip when the camera is in record standby mode.

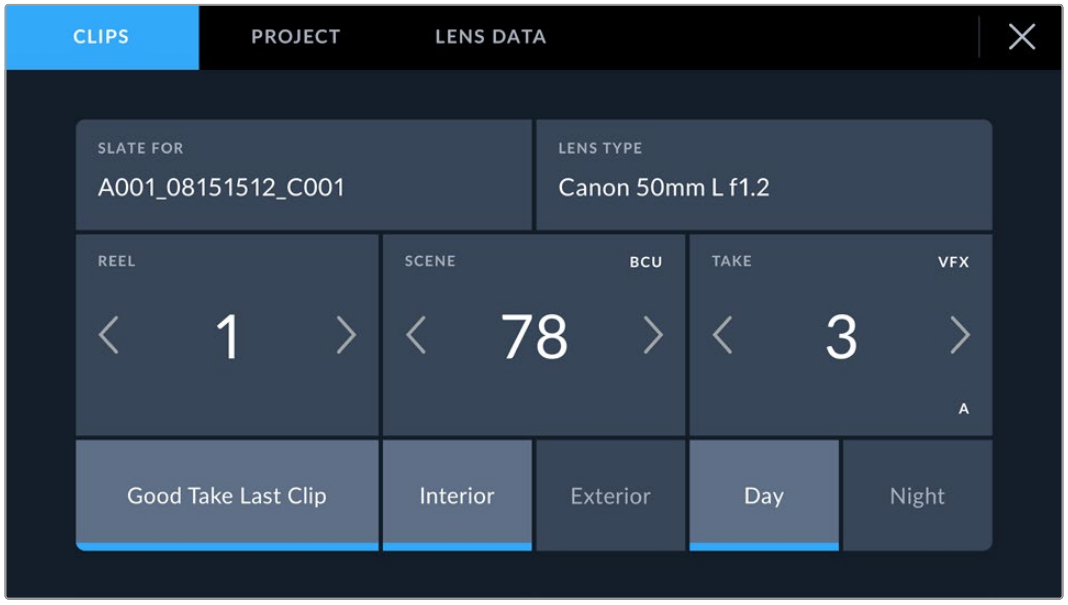

The slate's clip metadata displays the filename, lens data, reel, scene and take numbers, good take marker, interior or exterior, plus day or night

Reel

The 'reel' indicator shows the current reel.

Your URSA Cine automatically increments reel numbers, so there is usually no need to enter this manually. When you are moving to a new project and want to start from reel '1' again go into the project tab of the slate and tap 'reset project data'.

Scene

The 'scene' indicator shows the current scene number, and can also show the current shot number and type.

The number on this indicator always refers to the current scene. You can move this up and down using the left and right arrows on either side of the scene number, or tapping the scene number to enter the scene number editor.

The range of possible scene numbers is 1 to 9999.

By adding a letter to the scene number in the scene number editor, you can also indicate the current shot. For example 23A would indicate scene twenty three, shot one. If you have a shot letter added to your scene, your URSA Cine will suggest letter increments whenever you enter the scene number editor. For example, if your current scene number is 7B, your URSA Cine will offer '7C' as an increment suggestion.

The scene number indicator can also show information about the current shot size in the top right corner of the 'scene' tile. For example, WS, CU, MS, etc. You can select these in the scene number editor at the right hand side of the shot keyboard.

The shot sizes available are:

WS	Wide shot
MS	Medium shot
MCU	Medium close up
CU	Close up
BCU	Big close up
ECU	Extreme close up



When entering ‘scene’ metadata, your URSA Cine will prompt you with increment suggestions to the left of the touch keyboard, and shot types to the right

Take

The ‘take’ indicator shows the take number for the current shot. You can increment this up or down by tapping the left or right arrows on either side of the take number, or tapping the indicator to enter the take number editor.

TIP When the shot number or scene letter are advanced, the take number will revert to ‘1.’

You can add take descriptions in the take number editor. These are offered to the right of the take number keyboard, and correspond to the following scenarios:

PU	'Pick up.' This refers to a reshoot of a previous take to add additional material after principal photography has wrapped.
VFX	'Visual effects.' This refers to a take or shot for visual effect use.
SER	'Series.' This refers to a situation in which multiple takes are shot while the camera is kept running.



When entering 'take' metadata, your URSA Cine will offer prompts for additional shot types to the right of the touch keyboard

Good Take

Tap the 'good take' indicator to flag good takes for easy recall in post production. This tag applies to either the last clip recorded, if your URSA Cine is in standby mode, or the clip currently being viewed in playback mode.

Int / Ext

Tap 'int' or 'ext' to add a 'interior' or 'exterior' tag to the next clip in standby mode, or the current clip in playback mode.

Day / Night

Tap the 'day' or 'night' icons to add a 'day' or 'night' tag to the next clip in standby mode, or the current clip in playback mode.

Project Metadata

Project metadata behaves the same way whether you are in standby or playback mode. This metadata always refers to your project as a whole and is independent of clip numbers.

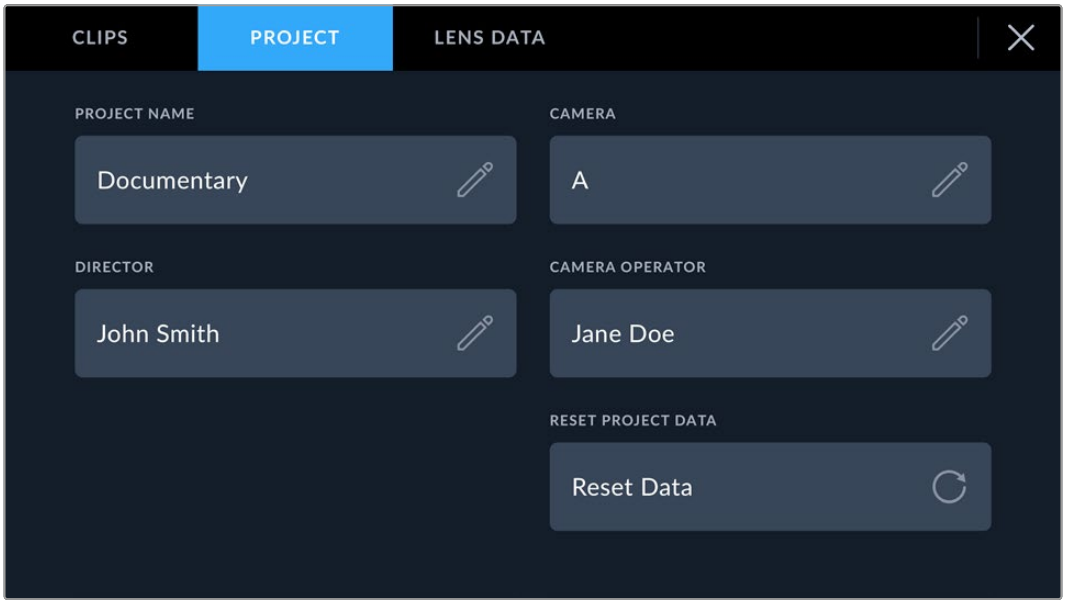

Your URSA Cine's 'project' slate tab

Project Name

Displays your current project name. Tap the pencil icon to change the project name.

Director

Displays the director's name for the current project. Tap the pencil icon to change the director name.

Camera

Displays a single letter camera index. Tap the pencil icon to change the camera index.

NOTE Camera index is used in metadata and for file naming purposes and differs from your URSA Cine's 'ATEM Camera ID' used when controlling URSA Cine with an ATEM switcher via an Blackmagic Streaming Decoder or an ATEM Television Studio HD8 ISO or ATEM Mini Extreme ISO G2 model switcher.

Camera Op

Displays the camera operator. Tap the pencil icon to change the camera operator name.

Lens Data

These settings display information about the current lens fitted to your camera. Many electronic lenses automatically supply information such as the lens model, aperture and focal length. If you are using a lens that does not provide this information, or you want to enter additional data, you can tap the pencil icon in this setting to enter the information manually. This will bring up the 'lens data' menu, which contains the following information:

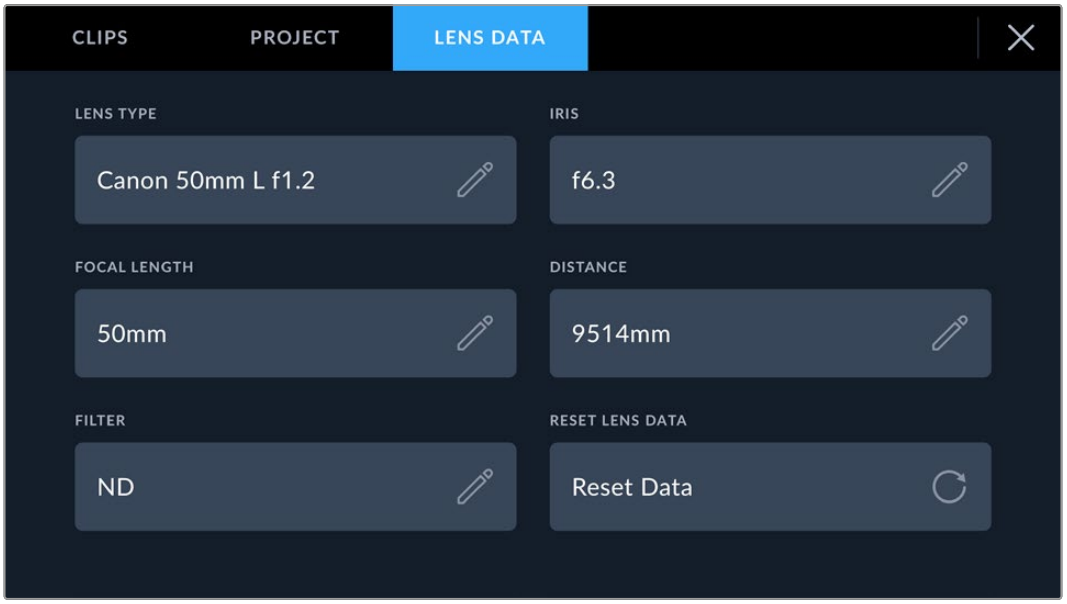

The ‘lens data’ menu showing information automatically populated from a lens with Cooke /i Technology

Lens Type

Shows the lens model. If your lens type is not automatically shown here, you can tap this setting to enter the data manually. Your camera has an internal database stored for many commonly used lenses, so if you need to enter data manually, your camera will suggest names automatically as you type. This makes entering data much faster.



Use the touch keyboard to enter lens data if it is not provided automatically

Iris

Shows the iris aperture setting at the start of your clip. This information can be displayed in f- or T-stops depending on the lens used, if supplied automatically. Tap this setting to enter data manually.

Focal Length

Shows the focal length setting of the lens at the start of the recorded clip. When automatically supplied, this is shown in millimeters. Tap this setting to enter data manually.

Distance

Shows the focus distance settings of the lens for the recorded clip. Some lenses can provide this data automatically and it will be provided in millimeters. You can also enter this data manually.

Filter

Shows the current lens filters used. Tap this setting to enter data manually. You can make multiple entries separated by commas.

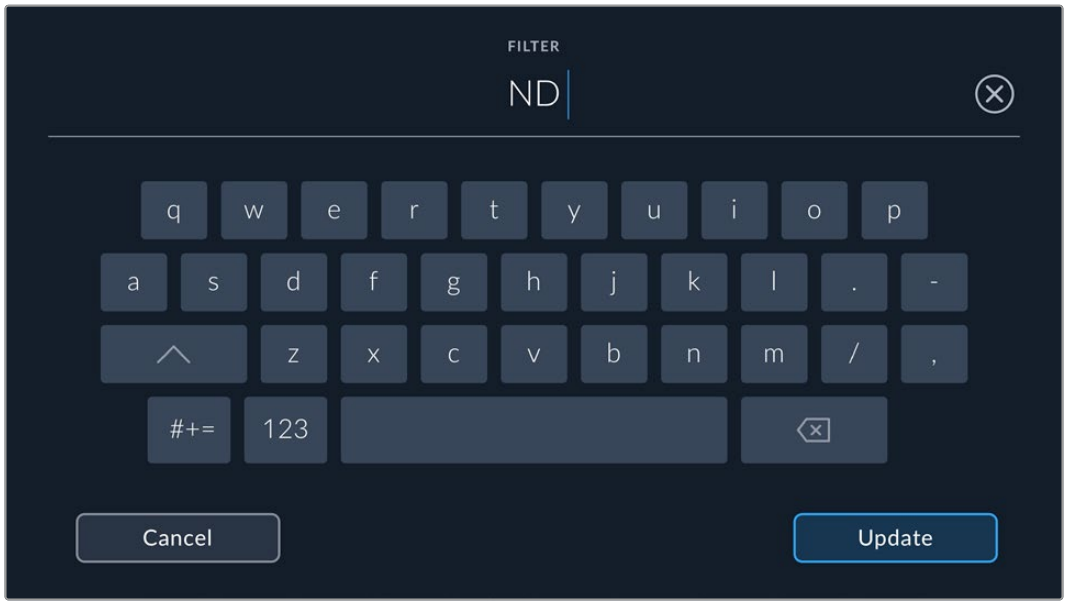

Filter information is entered manually

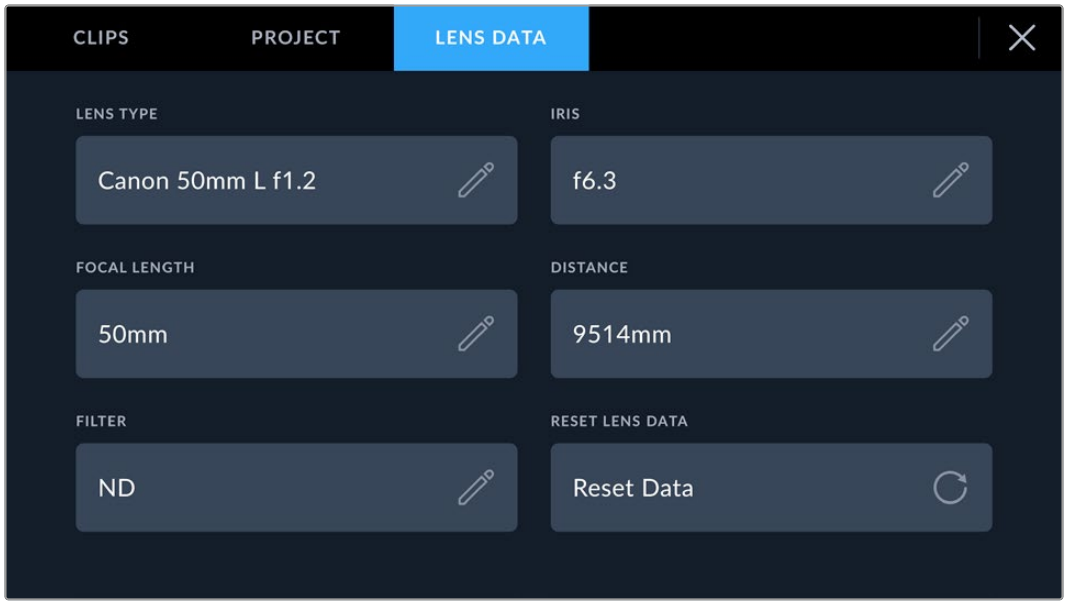

The ‘lens data’ menu showing information automatically populated from a lens with Cooke /i Technology, and filter information that has been manually entered

NOTE You can clear lens data at any time by tapping the ‘reset lens data’ icon in the ‘lens data’ menu. You will be prompted to confirm your choice. If you confirm, all lens data will be cleared and repopulated with any lens data automatically provided by the currently fitted lens. If you have manually entered any information into these fields, you will need to reset the lens data the next time you mount a lens, otherwise the manually entered value will remain.

Gyro Stabilization

Your Blackmagic URSA Cine automatically records pan, tilt and roll data captured by an internal motion sensor. This data is also known as gyro data, which DaVinci Resolve can then use to stabilize handheld shots.

It’s important to calibrate your camera’s motion sensor prior to recording to ensure that the recorded gyro data is accurate. You can find more information in the ‘settings’ section under ‘motion sensor calibration’.

Enabling Gyro Stabilization

To enable the gyro stabilization you will need to make sure your lens’s optical image stabilization is turned off. L-mount lenses with built in optical stabilization have a physical switch to turn it on or off.

Recording Gyro Data with Manual Lenses

For gyro stabilization to work at its best, it requires accurate lens focal length information which is included in the metadata that is automatically recorded when using most L-mount lenses. For manual lenses that do not support electronic communication with the camera you will need to enter this information into the camera’s slate.

1. Swipe left or right on your camera’s touchscreen from the main view to bring up the slate.
2. Tap the ‘lens data’ tab.
3. Tap on the ‘focal length’ section and type in the focal length of the lens you are using.



Enter ‘lens data’ when using lenses that do not have electronic communication with the camera

NOTE You will need to update this information each time you change manual lenses of different focal lengths. Lenses with in built electronics will automatically overwrite the metadata.

Applying Gyro Stabilization in DaVinci Resolve

After importing your clips and setting them up on a timeline:

1. Go to the ‘edit’ page’s inspector window and scroll down to ‘stabilization’.
2. Set the stabilization mode to ‘camera gyro’.
3. Click ‘stabilize’.

A progress bar will let you know when the stabilization is complete.



In DaVinci Resolve’s inspector window, select ‘camera gyro’ to stabilize the clip using gyro data

TIP You can enhance the results by shooting with narrow shutter angles to minimize motion blur. For example, 45 degrees.

URSA Cine 12K for Live Production

Your URSA Cine 12K LF is also a very capable broadcast camera for live production with rich cinematic quality. This lets you connect to ATEM switchers with full camera control, talkback, tally and program return using SDI or SMPTE-2110 over 10G Ethernet.

To enable your URSA Cine 12K for live production:

1 Open the record menu and set the resolution to '4K Live SMPTE-2110'.

2 Choose your optical coverage, depending on if you want to use large format, Super 35 or B4 lenses for your live production work. All of these options have a 16:9 aspect ratio for outputting to a switcher in 4K scaled from that area of the image sensor. The small image on the button shows you how much of the image sensor you are using.

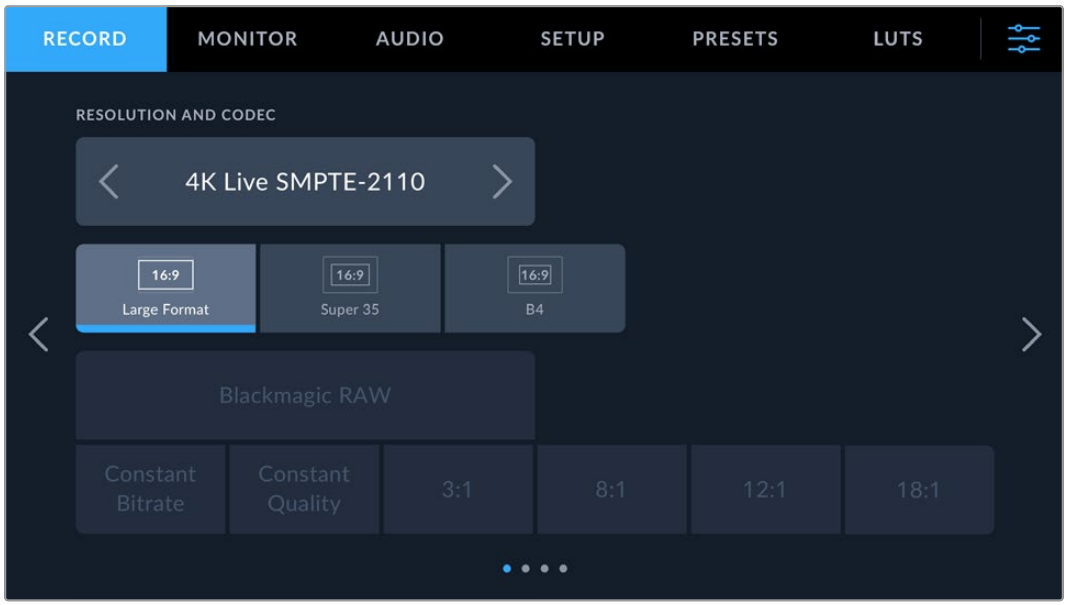

3 After making your selection press the menu button to confirm the change. Your camera will take a moment to reset.

It's worth noting that if you are seeing any vignetting on the image output from the camera, you may be using a super 35 lens but have the camera accidentally selected as large format. In this case, simply change the resolution setting to Super 35 and the camera will adjust the scan area of the sensor to suit that size.

Once the camera is ready, the lower area of the display including the record icon and storage indicators will be replaced by talkback controls. These are a quick way to control your levels when using a headset connected to the 3.5mm TRRS port on the rear of the camera. To adjust the headphone volume drag the volume slider left or right. To 'push to talk' and also allow you to adjust the microphone level tap the microphone icon on the right hand side and drag the slider.



The push to talk button goes blue when push to talk is enabled, or latched and you will also notice that the headphone icon to the left of the slider changes to a microphone to make it clear which level you are adjusting.

When the camera is set to 4K live SMPTE-2110 the SDI B output becomes a program input so you can connect a program return from an ATEM ADI switcher. Once connected, the camera will receive camera control, talkback and tally.

If you are broadcasting to an ATEM switcher using SMPTE-2110 you can subscribe to the switcher's program return stream using the Blackmagic Camera Setup utility.

Connecting to an ATEM 4 M/E Constellation IP Switcher

SMPTE-2110 is an Ethernet based broadcast solution that lets you stream video, audio and data signals over a network.

The following illustration shows eight Blackmagic URSA Cine 12K LF cameras connected via Ethernet cables to eight 10G ports on the rear of the Blackmagic StudioBridge 10G PWR. The Ethernet Switch is connected to ATEM 4 M/E Constellation IP via a single 100G Ethernet cable. All 8 video streams can fit over a single 100G connection from the StudioBridge to the ATEM switcher along with program return, camera control, tally and talkback from the ATEM switcher to the StudioBridge. Each URSA Cine 12K can subscribe to the ATEM IP switcher program return using Blackmagic Cameras Setup.

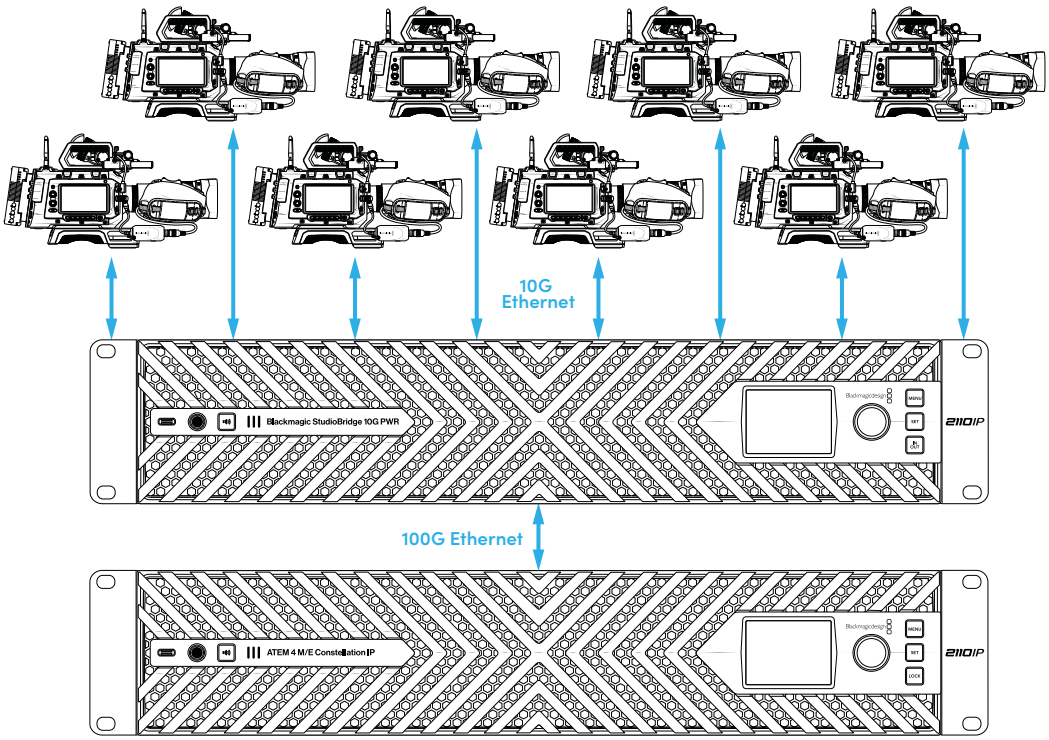

Once the URSA Cine cameras and ATEM IP switcher are powered and connected to the SMPTE-2110 network you can subscribe to the ATEM program return feed.

To subscribe to an ATEM program feed:

1 Open Blackmagic Cameras Setup utility. When the camera is set to 4K Live SMPTE-2110 you will notice an additional tab labeled ‘ST-2110’. Click on it to reveal receiver, sender, PTP and NMOS settings.

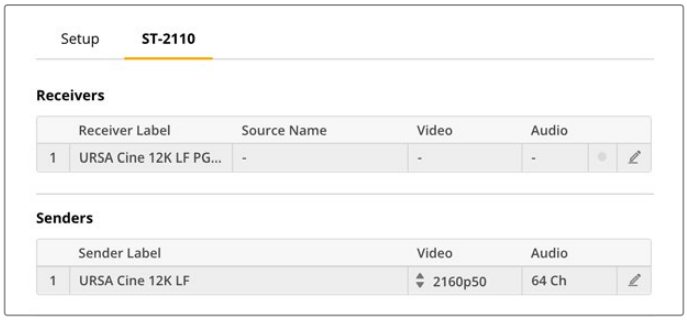

2 Click on the pencil icon on the far right side of the receivers table. Once open you can enter a custom receiver label for URSA Cine 12K LF.

3 Select the SMPTE-2110 program stream from the table list. In this example it is labeled ’ATEM Program’. Once selected, click ‘save’ at the bottom of the window.

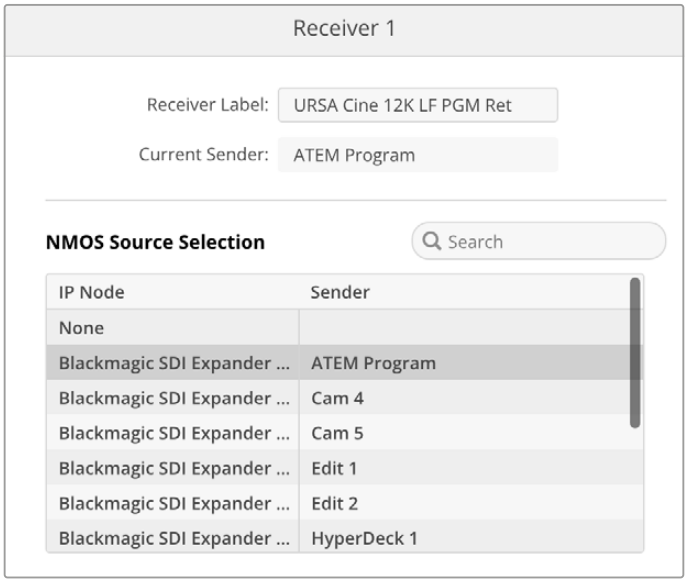

4 The receivers table will now display the SMPTE -2110 source along with the video standard, audio channel count and stream status.

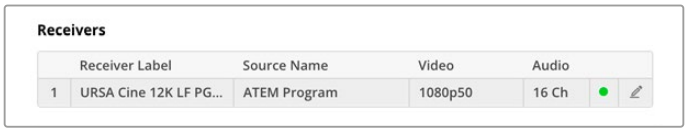

Now when you press the 'PGM' button on the camera body you will see the program return feed from your ATEM switcher.

With URSA Cine 12K LF connected to your SMPTE-2110 network you can also route the SMPTE-2110 signal using an NMOS controller, for example Blackmagic Ethernet Switch 360P or Blackmagic Ethernet Switch 820. The camera SMPTE-2110 stream will

Updating the camera sender details:

1 Click on the pencil icon in the far right column of the senders table.

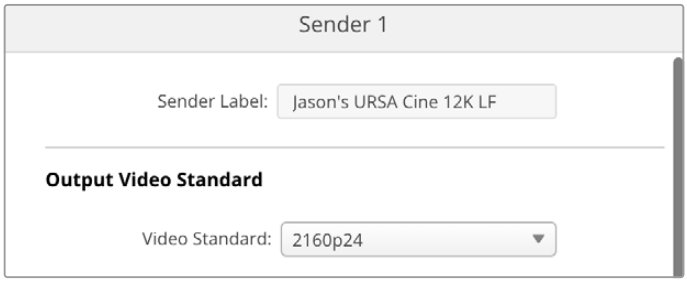

URSA Cine 12K LF's default sender label will be populated from the 'name' entered for the camera on top of the setup tab. The receiver will also be populated with 'PGM Ret' appended to it. To further customize the sender label enter a name into the appropriate label field. The label will appear on any connected hardware or software with NMOS control to make it easy to recognize.

2 Select the output video standard for your SMPTE-2110 using the video standard menu.

3 Click 'save'.

The project frame rate on the camera will now update to match the selected video standard. Now you're ready to subscribe to the camera's SMPTE-2110 stream using an NMOS controller or the setup utility for the particular product. For example, you could down convert the signal to from Ultra HD to HD using a Blackmagic UpDownCross 100G on the same network. Open the Blackmagic Converters Setup utility and subscribe to the stream using the receivers table in the same way you subscribed to the ATEM program feed using the Blackmagic Cameras Setup utility.

TIP Labels appear shortened when using the front panel LCD router view on Blackmagic Design products including Blackmagic Ethernet Switch and SDI Expander 8x12G. If you plan to route streams using the front panel router it can be helpful to keep the label under 10 characters so they are easy to recognize.

For more information on using SMPTE-2110 with URSA Cine 12K LF, including modifying multicast addresses, refer to the 'Blackmagic Camera Setup utility' section later in this manual.

Connecting to an ATEM Television Studio 4K8 Switcher

You can also connect to a traditional SDI based switcher.

The following illustration shows eight Blackmagic URSA Cine 12K LF cameras connected to an ATEM 2 M/E Constellation 4K switcher via 12G-SDI. Program return is then connected from 8 12G-SDI outputs on the rear of the ATEM switcher to the eight cameras using the 12G-SDI port on the rear labeled 'SDI B'.

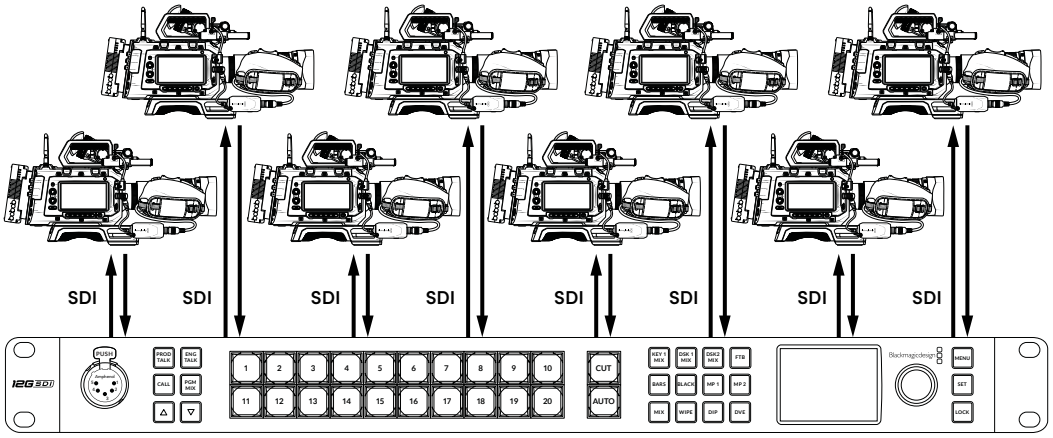

Camera Video Outputs

URSA Cine has two 12G-SDI outputs, one Ethernet streaming output, and 5 USB outputs including the EVF output. This section describes each output and how you can use them.

12G-SDI Outputs

The 12G-SDI out connectors on the rear panel support HD and 4K video including high frame rate progressive formats such as 2160p50, 59.94 and 60 on a single SDI cable. Interlaced HD formats are also supported including 1080i50, 59.94 and 60. You can use the 12G-SDI outputs to connect to any SDI monitor, for example a director's preview monitor or to video village, as well as to 4K switchers such as ATEM Constellation switchers. This output can be switched between HD and Ultra HD by selecting 2160p, 1080p or 1080i in the 'SDI A' and 'SDI B' monitor settings.

Connecting to Monitors

SDI monitoring can be handy when accessing the fold out monitor is impractical, such as when secured high on a jib arm, on a crane, or mounted on a vehicle. Frame guides and other monitoring information can be enabled or disabled in via the camera's 'monitor' settings.

The SDI outputs automatically flag HDR video with ancillary metadata when you are working in 'Film' dynamic range and use the 'Broadcast Film to Rec.2020 Hybrid Log Gamma' or 'Broadcast Film to Rec.2020 to PQ Gamma' LUT on the SDI output. This means you can display stunning HDR images on HDR enabled screens from either SDI output.

12G-SDI Output Standards	2160p23.98, 24, 25, 29.97, 30, 50, 59.94, 60. 1080p23.98, 24, 25, 29.97, 30, 50, 59.94, 60. 1080i50, 59.94, 60.

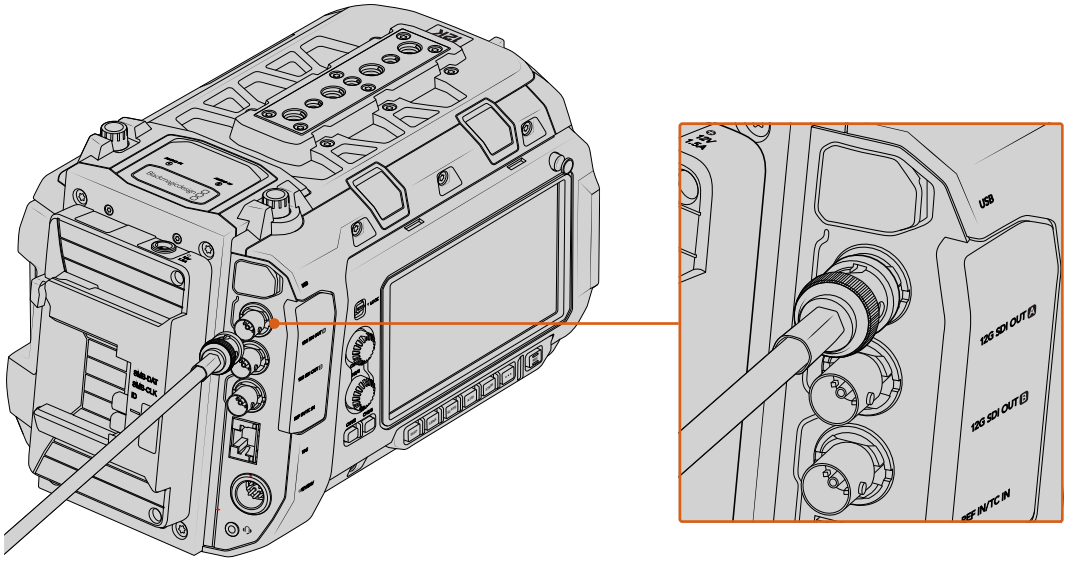

You can connect the 12G-SDI output to any 1080 HD or Ultra HD live production switcher or monitor. When the record resolution is set to '4K Live SMPTE-2110' the SDI B output becomes an SDI input so you can connect a program return from your switcher via SDI. You can also make it an input when the program audio source is set to 'switcher'.

URSA Cine Baseplates

There are two types of URSA Cine Baseplate. Both models have a built in shoulder pad for handheld shooting with the same attachment and adjustment mechanism. This makes it quick and easy to mount your camera to a tripod and balance it quickly and easily using a standard dovetail plate.

URSA Cine is shipped with an URSA Cine Baseplate 19. This plate has built in rosettes on each side for attaching accessories and rod holes for 15mm lightweight and 19mm studio rods for attaching and positioning cinema accessories like matte boxes or follow focus equipment.

URSA Cine Baseplate 15 is an optional accessory which is a little smaller and lighter. It offers similar functionality with a provision for 15mm lightweight rod accessories but does not have the rosettes or the ability to use 19mm rods. URSA Cine Baseplate 15 should be used if you are using URSA Cine with box lenses and mounting it on a lens support bracket, like the Fujinon ELH-112B-35A.

Both baseplates offer a wide range of forward and backwards adjustment for balancing the camera on your shoulder and have a small kickstand at the rear which can be flipped down to achieve a flat position when sitting the URSA Cine on a desktop without a dovetail plate.

TIP To fit your baseplate back into the custom molded pelican case, flipping the kickstand back into the baseplate before stowing it away helps to fit it nicely into the molded cut-out.

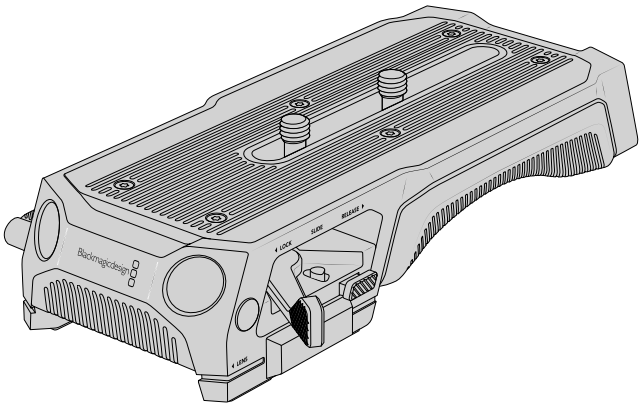

Blackmagic URSA Cine Baseplate 15

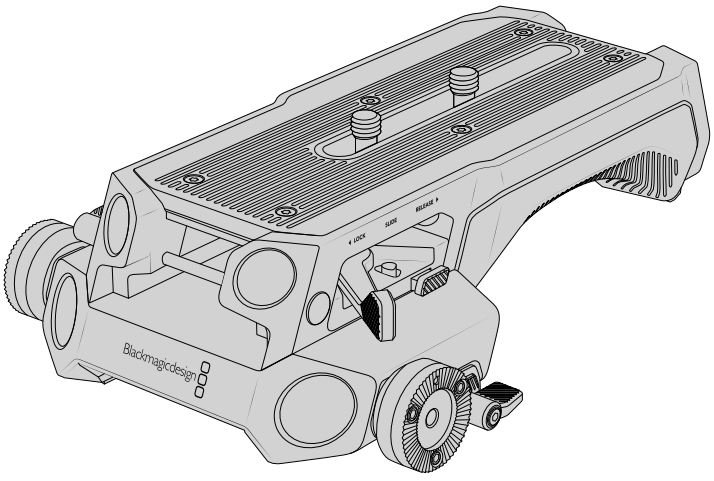

Blackmagic URSA Cine Baseplate 19

Attaching the Baseplate

If you have purchased the URSA Cine 12K Standard kit with EVF, the baseplate is already attached to your camera. If you have purchased the standard kit which doesn't include the EVF then you will need to attach the baseplate plate after removing the camera from the case.

To attach URSA Cine Baseplates to your camera:

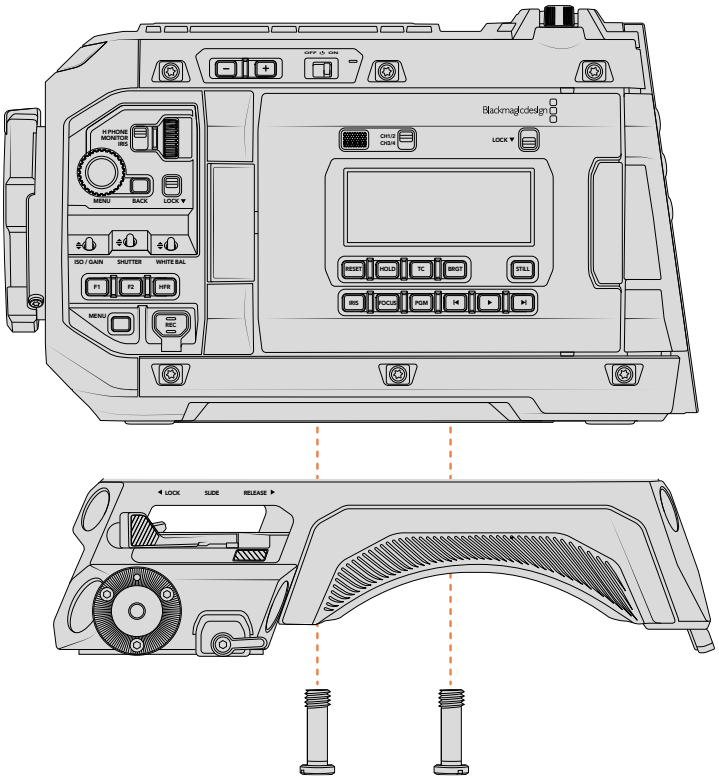

Secure the attached baseplate screws into the mounting points on the underside of your camera using a large flathead screwdriver

Adjusting the Baseplate

The baseplate has a small lever towards the front of the plate with 3 lever adjustment positions. Swing the lever left or right to select an adjustment position.

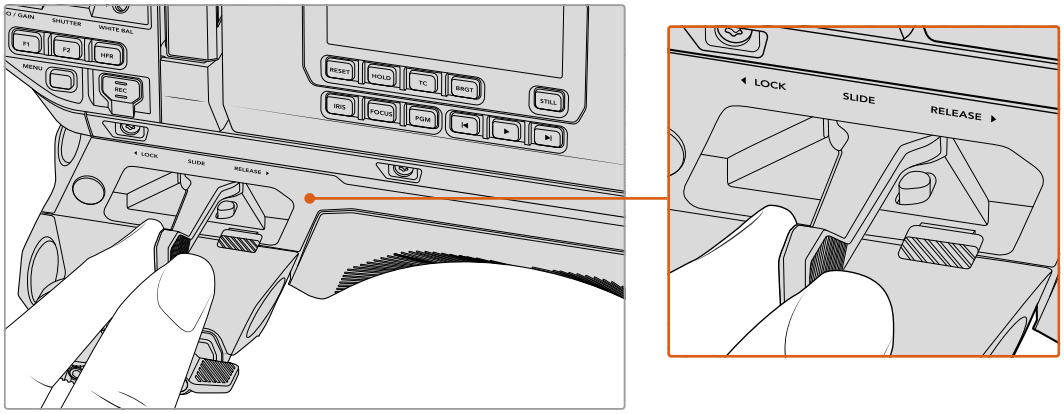

The different positions include 'lock', 'slide' and 'release'.

Lock

This tightens the mounting clamp so the baseplate is firmly secured to the tripod.

Slide

This position releases the clamp just enough to allow the baseplate to slide freely forwards and backwards on the tripod mount, but not enough to release from the dovetail entirely. This is helpful when making balance adjustments. When in this position you can slide it off the front or rear end of the dovetail bottom plate although most dovetail plates have safety mechanisms built in to ensure you can't do this by accident.

Release

If you want to lift the camera vertically off from the dovetail plate, press and hold the quick 'release' button. This enables the clamp lever to be moved to the 'release' position which opens the clamp completely and lets you take the camera away from the tripod. Be sure to have a firm hold of the camera when selecting the quick release position.

Attaching the Camera to the Dovetail Plate

When first attaching the camera onto the dovetail plate you will need to either slide it on from the front or rear of the plate with the baseplate lever in the 'slide' position, or lower it on from above with the lever in the 'release' position.

Attaching in the 'Release' Position

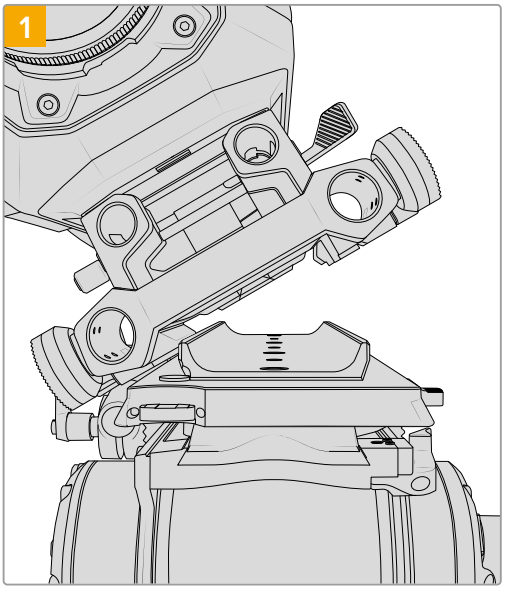

With the baseplate lever set to the 'release' position, carefully lower the camera from one side onto the dovetail plate.

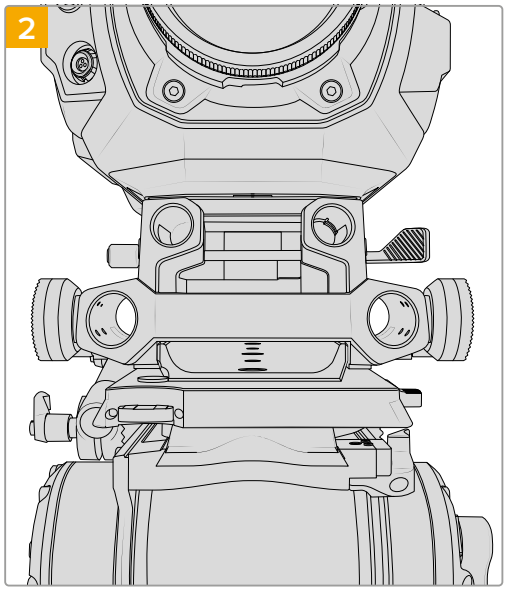

Once flush against it lower the other side so the camera is sitting flat and push the baseplate lever forwards into the 'slide' then 'lock' position. Double check the camera is now sitting securely and locked into place on the tripod.

Attaching in the ‘Slide’ Position

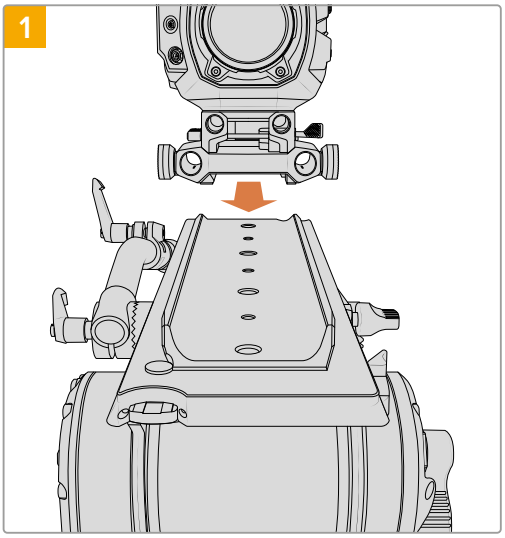

With the baseplate lever set to the ‘slide’ position, align the camera to the dovetail plate.

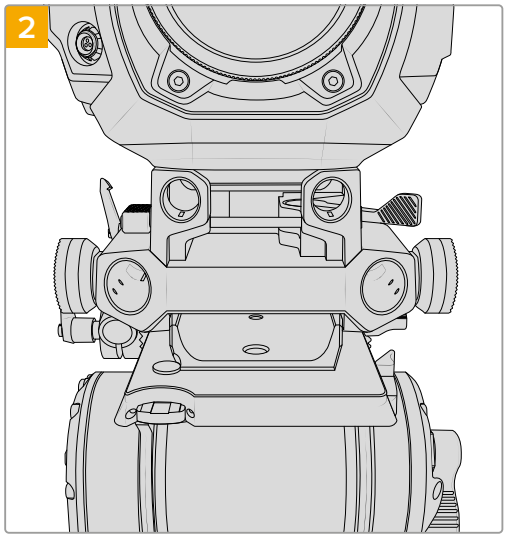

Slide the baseplate onto the dovetail plate then push the baseplate lever forwards into the ‘lock’ position. Double check the camera is now sitting securely and locked into place on the tripod.

Interchangeable Lens Mount

Blackmagic URSA Cine ships with the PL mount attached. However, your camera has an interchangeable lens mount so you are not locked into using lenses to match the lens mount supplied with your camera. This means you can remove the original mount and attach an optional EF, LPL or B4 mount. The locking EF mount is included with your camera, however you can also purchase the mount separately, plus the PL, LPL and B4 mounts, via your local Blackmagic Design reseller.

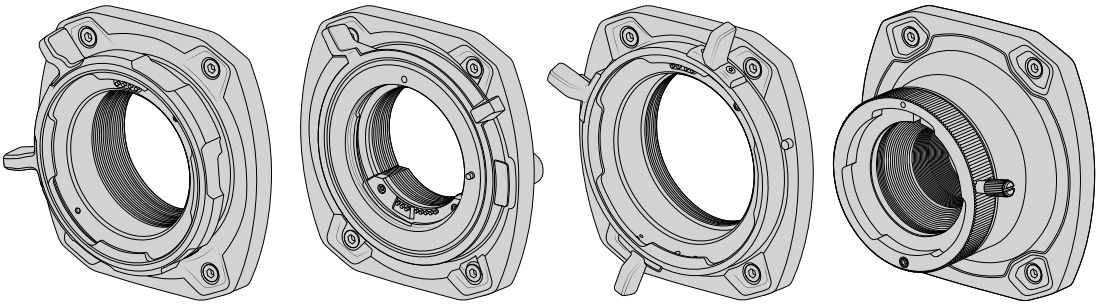

PL mount | Locking EF mount | LPL Mount | B4 Mount

With the ability to interchange separate mounts, you have the freedom to use different lenses based on the type of assignments you’re working on. For example, the EF mount lets you use high quality stills lenses and the LPL mount lets you use high end, robust cinema lenses designed for large format sensors, absolute precision and repeatable control.

Attaching each mount is as simple as unscrewing the original mount and replacing it with the new mount. It’s very easy!

Removing the PL Mount

To remove the original PL mount from URSA Cine:

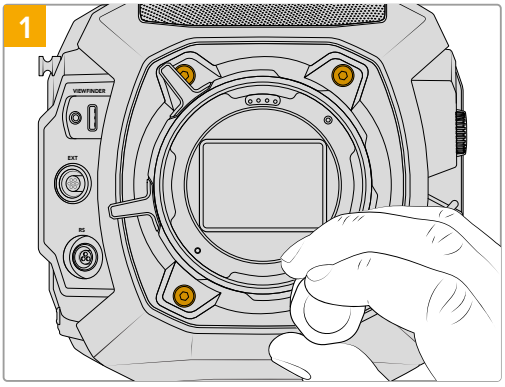

First ensure power has been disconnected from your camera. Unscrew and remove all of the mount screws using a 3mm Hex driver. When removing the PL mount you may need to rotate the locking ring slightly to access any obscured screws.

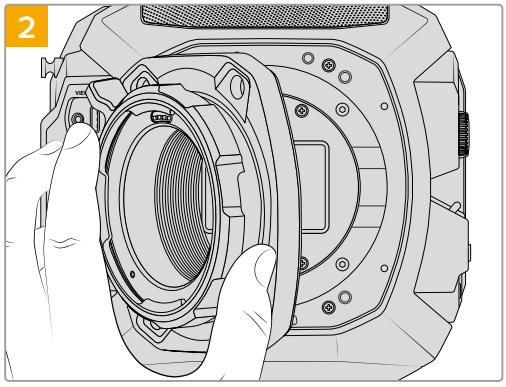

Gently remove the lens mount.

Keep reading this section for details about the LPL, EF and B4 lens mount kits and how to install each mount to your URSA Cine.

Blackmagic URSA Cine Mount LPL

Attaching the LPL mount to your URSA Cine lets you use high end precision cinema that are designed for large format digital cinema camera sensors.

The LPL mount kit includes:

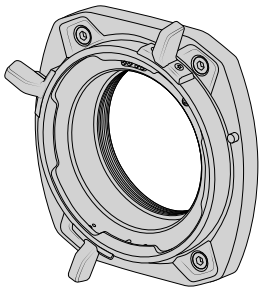

1 x LPL mount

The LPL mount is shipped with a protective dust cap.

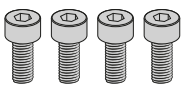

4 x 3mm Hex screws

The LPL mount kit also comes with a full spare sets of screws in case the originals are misplaced.

Tools Required

When attaching the LPL mount, you will need a 3mm Hex driver. While it's not absolutely required, we recommend using a torque wrench able to accurately set a maximum torque of 1.5Nm to remove the potential of over tightening the screws.

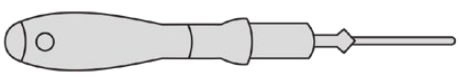

3mm Hex driver

Attaching the LPL Mount

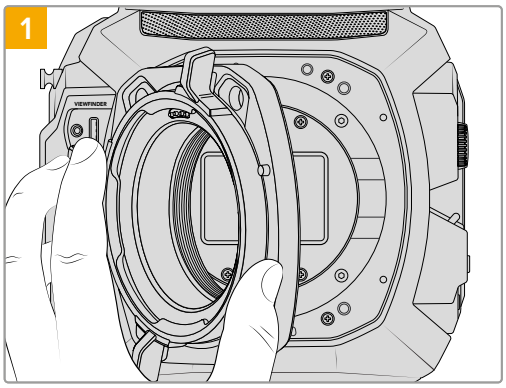

Carefully place the LPL lens mount onto the camera body. Ensure the electronic contacts on the LPL mount are located towards the left side of the camera at the 9 o'clock position.

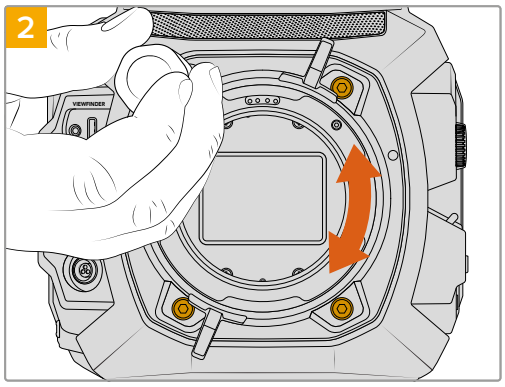

Using a 3mm Hex driver or torque wrench set to 1.5Nm, loosely turn the four mounting screws until initial contact is made with the shoulder of the lens mount. To access all four screws, you may need to rotate the LPL locking ring, as some holes may be obscured when the ring is either open or closed.

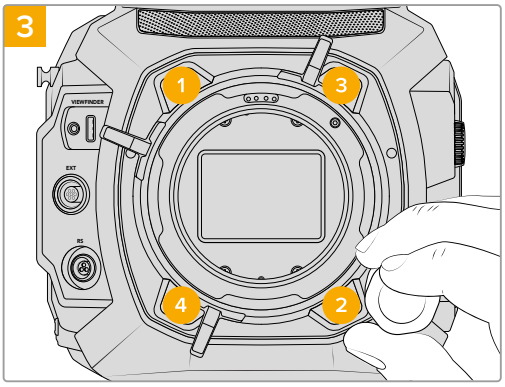

Confirm the lens mount is level and correctly aligned, then tighten the screws in the order shown here to an even pressure without overtightening the screws.

Blackmagic URSA Cine Mount EF

Blackmagic URSA Cine Mount EF supports an extensive range of EF stills and cinema lenses.

The EF mount kit includes:

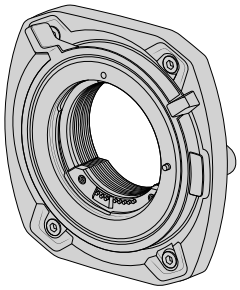

1 x EF mount

The EF mount lets you attach common EF stills lenses.

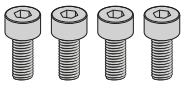

4 x 3mm Hex mount screws

The EF mount kit also comes with a full spare sets of screws in case the originals are misplaced.

Tools Required

When attaching the EF mount, you will need a 3mm Hex driver. While it's not absolutely required, we recommend using a torque wrench able to accurately set a maximum torque of 1.5Nm to remove the potential of over tightening the screws.

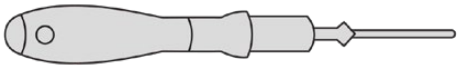

3mm Hex driver

Attaching the EF Mount

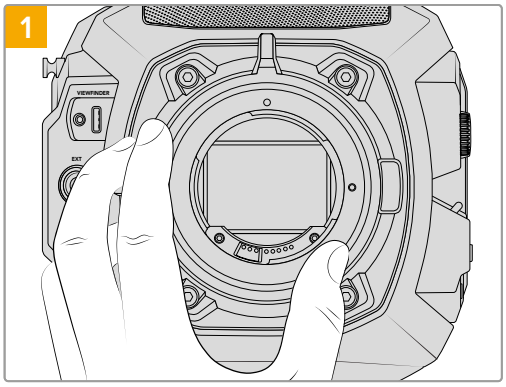

Carefully place the EF lens mount onto the camera body ensuring the lens release button is located towards the right side of the camera at the 3 o'clock position.

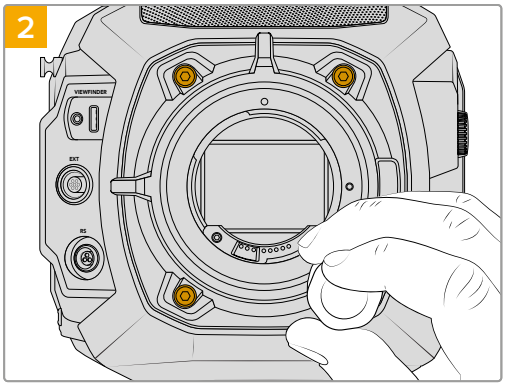

Using a 3mm Hex driver or torque wrench set to 1.5Nm, loosely turn the four mounting screws until initial contact is made with the shoulder of the lens mount.

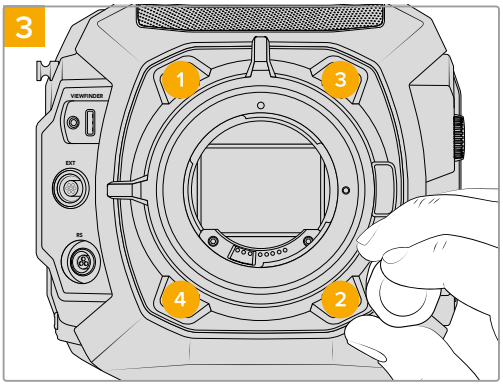

Confirm the lens mount is level and correctly aligned, then tighten the screws in the order shown here to an even pressure without over tightening the screws.

Attaching an EF Lens

The EF lens is easily attached by placing the lens mount against the camera mount and rotating the lens until it clicks into place. The lens can then be secured to the mount using the EF mount's locking ring.

To attach an EF lens:

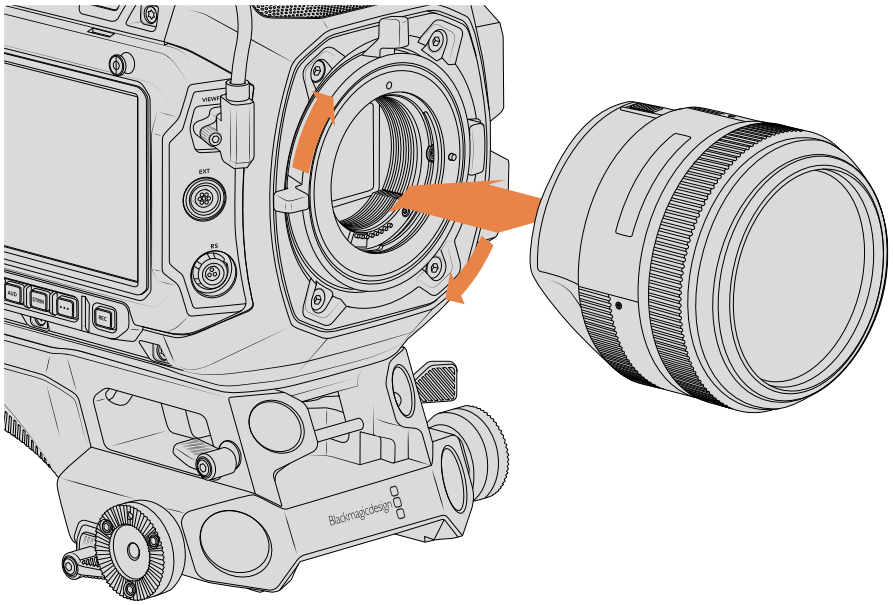

Attaching and removing an EF mount lens

1. The first step is to remove the protective dust cap. To do this, unlock the EF mount by rotating the locking ring counter clockwise until it stops.
2. Press the lens release button and rotate the dust cover counter clockwise until the red dot on the cover reaches the 12 o'clock position. This releases the cap and you can now remove it from the mount.
3. To attach the EF lens, align the dot on your lens mount with the dot on the camera mount. Many lenses have a visual indicator, for example a blue, red or white dot.
4. Insert the lens into the mount and rotate clockwise until it locks into place.
5. Tighten the EF mount locking ring by rotating clockwise until it feels secure. Avoid over tightening. This action clamps the lens into place and prevents movement.
6. To remove the lens, unlock the locking ring, hold down the locking button and rotate the lens counterclockwise until its dot or indicator reaches the 12 o'clock position. Gently remove the lens from the mount.

Blackmagic URSA Cine Mount B4 Kit

The B4 mount kit includes:

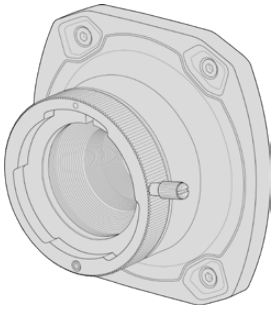

1 x B4 mount

The B4 lens mount lets you use broadcast and box lenses with URSA Cine. Features optics specifically designed to match the URSA Cine RGBW sensor. The B4 lens mount ships with two protective dust caps.

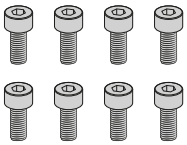

8 x 3mm Hex mount screws

The B4 mount kit comes with 4 x 3mm Hex mount screws plus a full spare sets of screws in case the originals are misplaced.

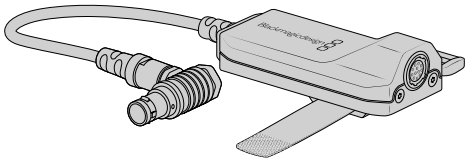

Blackmagic URSA Cine B4 Adapter Cable

Lens control cable that converts the 7 pin EXT control connector on the front of Blackmagic URSA Cine to the 12 pin Hirose lens control connection used on professional broadcast B4 lenses.

Tools Required

When attaching the B4 mount, you will need a 3mm Hex driver. While it's not absolutely required, we recommend using a torque wrench able to accurately set a maximum torque of 1.5Nm to remove the potential of overtightening the screws.

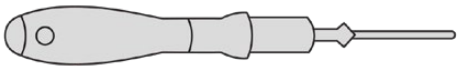

3mm Hex driver

Attaching the B4 Mount

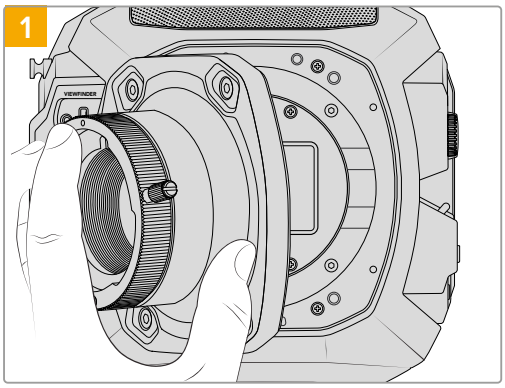

Place Blackmagic URSA Cine vertically on a solid, clean bench top and carefully place the B4 lens mount onto the camera body.

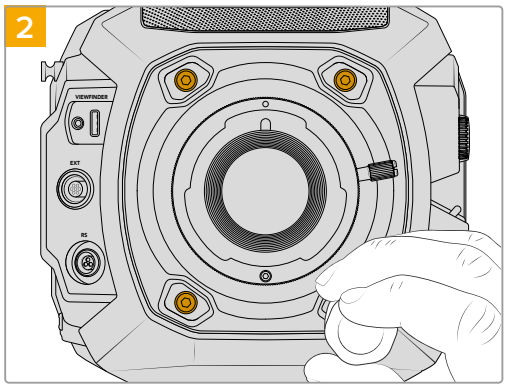

Using a 3mm Hex driver or torque wrench set to 1.5Nm, loosely turn the four mounting screws until initial contact is made with the shoulder of the lens mount.

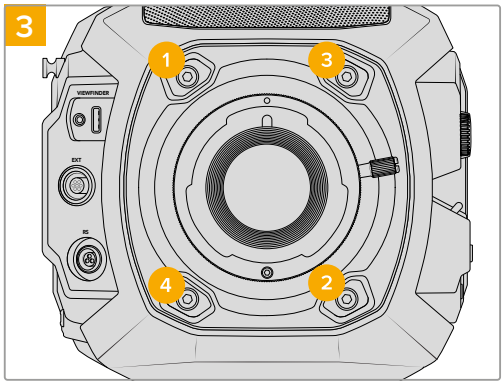

Confirm the lens mount is level and correctly aligned, then tighten the screws in the order shown here to an even pressure without overtightening the screws.

Attaching a B4 Mount Lens

Blackmagic URSA Cine Mount B4 features optics specifically designed to work with the 4.6K area in the center of your camera's sensor This means that if you already have a broadcast background, you can be comfortable mounting your existing B4 lenses to URSA Cine and shoot confidently.

To remove the protective dust cap, rotate the outer locking ring counterclockwise and pull the dust cap away from the mount.

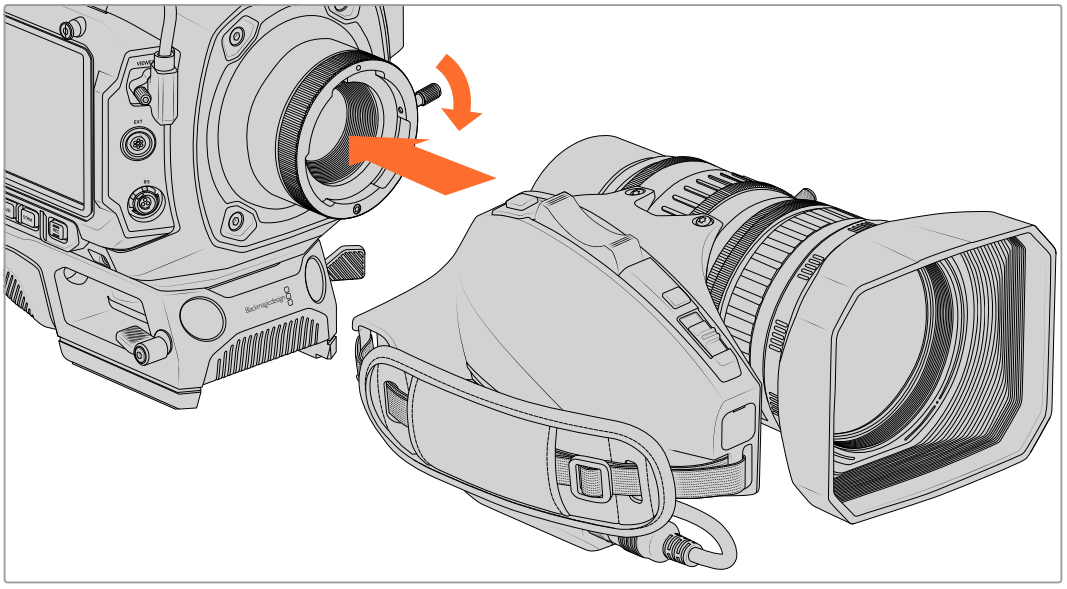

Rotate the locking ring clockwise to secure the lens to the camera

1. Turn the B4 lens locking ring counterclockwise to reveal the alignment slot inside the top of the mount. Align the B4 lens to your URSA Cine's B4 mount so the alignment pin on the lens matches the position of the alignment slot.
2. Hold the lens against the B4 mount so the mount plates are against each other and make sure the alignment pin is secured inside the alignment slot.
3. Turn the locking ring clockwise to tighten the lens against the mount and lock it into position.

To power the lens and provide lens control use the URSA Cine B4 Cable Adapter to plug the lens cable into the connector marked 'EXT' on the front of your URSA Cine. Most B4 lenses will have the 12 pin lens connector and cable built in.

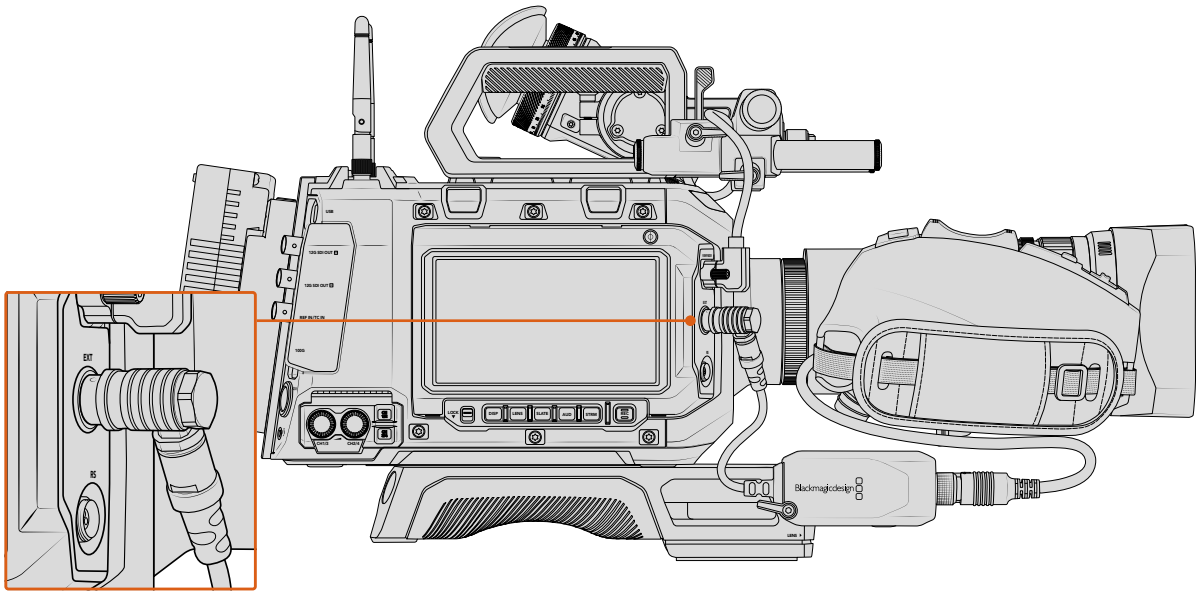

To connect the lens cable to your camera:

1. Plug the cable from the B4 lens into the adapter cable.
2. Now plug the right angle 7 pin Lemo style connector on the B4 cable adapter into the port labeled ‘EXT’ on the front of your URSA Cine.

URSA Cine B4 Cable Adapter is included with Blackmagic URSA Cine Mount B4 and provides a hook and loop strap. It is a good idea to use this to fasten the adapter cable to a short 15mm diameter carbon rod, similar to those used by URSA Cine EVF. This keeps it nicely in place.

For information on the types of B4 lenses and how to use them with your camera, refer to the ‘using servo zoom lenses’ section in this manual.

Once a B4 lens is attached, you will need to select the corresponding B4 resolution in the record tab of the settings menu. When the camera is set to ‘4K recording’ select ‘4608x2592’. If the camera is set to ‘4K live SMPTE-2110’, select ‘B4’.

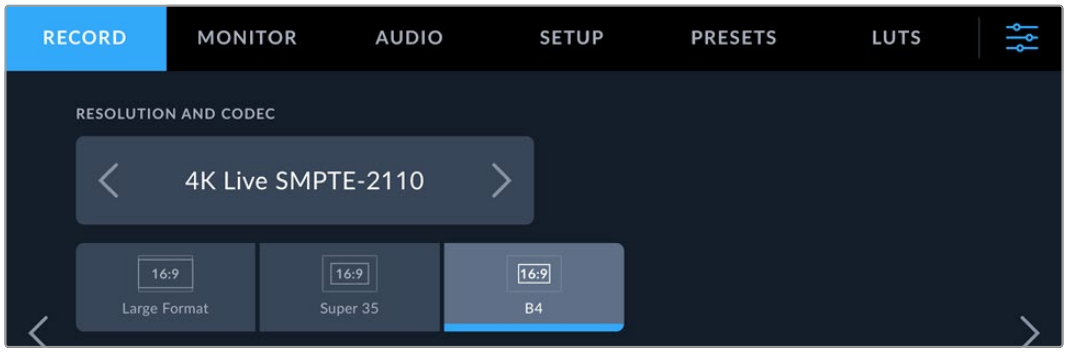

NOTE When no lens is attached to the camera, the optical element of Blackmagic URSA Cine Mount B4 is exposed to dust and other debris. Ensure that you keep the dust cap on whenever possible.

Using Servo Zoom Lenses

With the URSA Cine Mount B4 attached your URSA Cine supports servo driven B4 broadcast lenses.

B4 broadcast lenses offer several features that aren't typically present in still photography and cinema lenses. In addition to the ability to hold focus through a large zoom range, these lenses are distinguished by handgrip controls and servo driven iris and zoom functions. Some lenses also feature servo driven focus. With the lens connector fitted, iris and zoom can be controlled from the handgrip, from your camera or by using an optional Blackmagic Zoom Demand. You can even control your lens remotely via an ATEM switcher.

Lenses which have a focus servo can accept auto focus commands from the camera, continuously track focus using an optional Blackmagic Focus Demand or receive focus commands from an ATEM switcher.

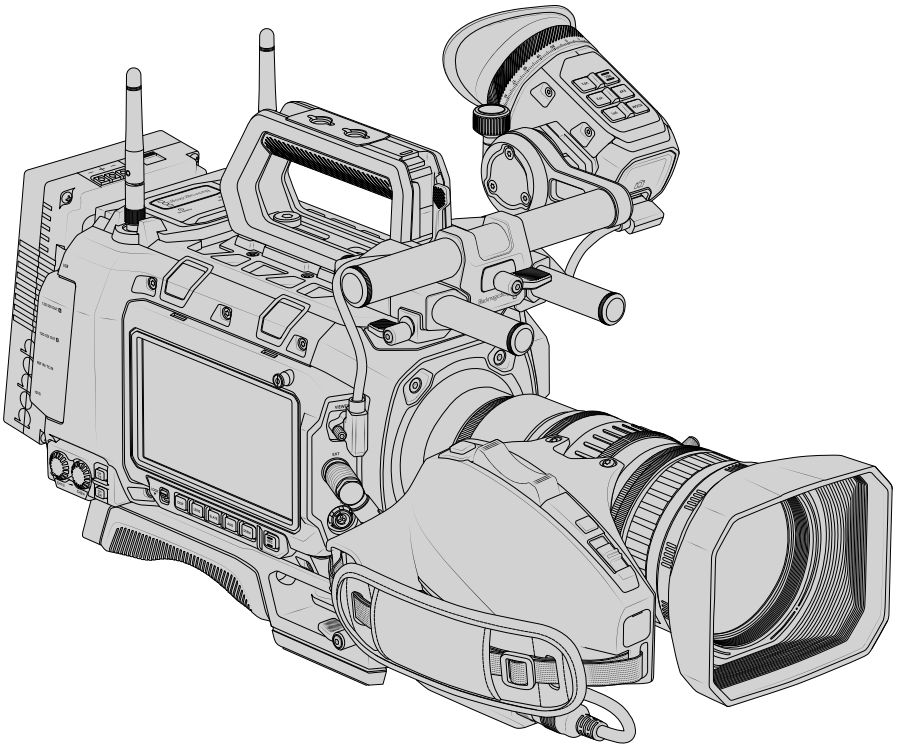

B4 Lenses with iris and zoom control include:

- Fujinon B4 lens models with HA, ZA, XA, UA and LA prefixes in their model name and RM in their suffix. For example, Fujinon **XA**20sxB**RM**.
- Canon B4 lens models with HJ, KJ and CJ prefixes and RSE or RSD in their suffix. For example Canon **KJ**20x8.2B I**RSD**.

B4 Lenses with full servo control for focus, iris and zoom include:

- Fujinon B4 lens models with HA, ZA and UA prefixes in their name and the letters RD or ZD in the suffix. For example, Fujinon **HA**22x7.8 BE**RD**.
- Fujinon box lenses with XA and UA prefix in their name.
- Canon B4 lens models with HJ, KJ..ex and CJ prefixes in their name and the letters ASE or ASD in the suffix. For example, Canon **HJ**24ex7.5B I**ASE**.
- Canon box lenses with XJ and UJ prefix in their name.

TIP Box lens models mentioned above support both zoom and focus servos. Please check with your lens supplier to confirm the servo motors are installed.

B4 lens controls

Iris

On the top of most B4 handgrips, you'll find an 'auto/manual' or 'A/M' switch, and a 'push auto' or 'iris' switch. These control your lenses' aperture ring.

Auto

Set this switch to 'auto' or 'a' to adjust your lens aperture via your URSA Cine, Blackmagic Zoom Demand or an ATEM switcher. You can adjust lens aperture from URSA Cine using the iris wheel, internal control panel buttons, touchscreen controls, or iris based auto exposure modes. See the 'touchscreen controls' and 'control buttons' sections in this manual for more details. While in 'auto' mode, the aperture ring on your B4 lens cannot be moved manually.

Manual

Set this switch to 'manual' or 'm' to adjust your lens aperture by turning the iris ring on the lens barrel. In this mode, your lens will not accept aperture commands from your URSA Cine or ATEM switcher.

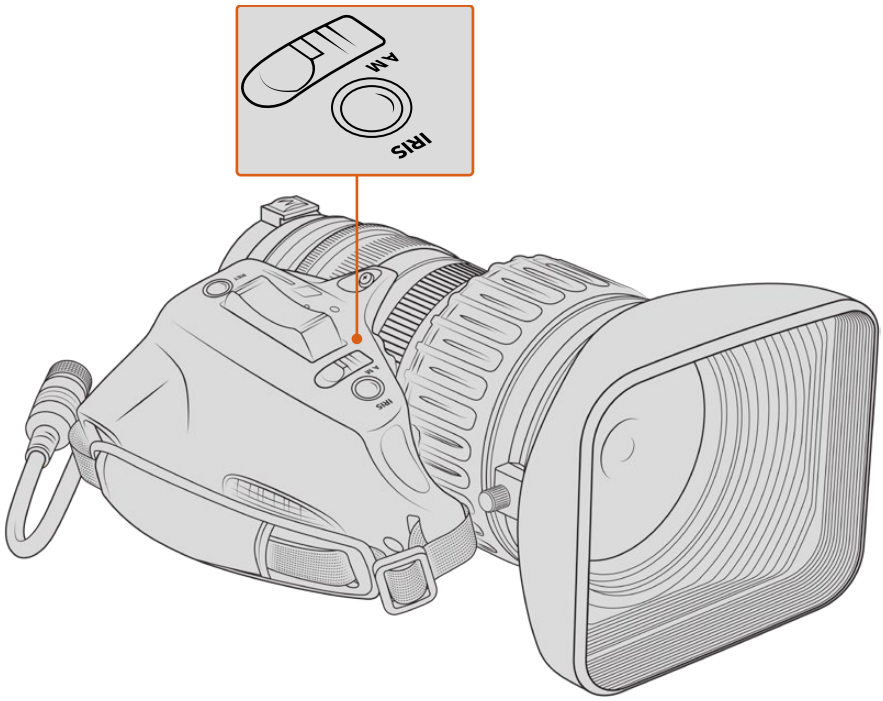

Push Auto/Iris

Use this button to momentarily activate 'auto' aperture control while in 'manual' mode. This can be combined with iris controls on your camera or ATEM switcher to great effect.

For example, with your camera set to an iris based auto exposure mode and your lens aperture set to 'manual,' you can freely adjust your lens iris by using the aperture ring on the lens barrel, however tapping the 'push auto'/'iris' button will momentarily activate auto exposure, adjusting your iris for the current lighting conditions.

Alternatively, you can set an iris value using the controls on your URSA Cine's LCD touchscreen. While in 'manual' mode, you are free to adjust lens aperture using the aperture ring on the lens barrel, but tapping the 'push auto'/'iris' button will return the lens to the preset value on your touchscreen.

Zoom

On the underside of most B4 handgrips, you'll find a 'zoom' switch that can be set to 'servo' or 'manual.' This controls zoom behavior.

Servo

Set this switch to 'servo' or 's' to enable servo zoom control. In this mode, the rocker switch on your handgrip can be used to zoom your lens in and out, as well as any other zoom related controls, such as zoom speed and quickzoom. Your lens will also accept zoom commands from URSA Cine, Blackmagic Zoom Demand and ATEM switchers, so long as it is connected to the camera via the lens connector. In this mode, you typically can't adjust your lens's manual zoom ring.

TIP Handgrip zoom rockers are typically linked to zoom speed. Push the rocker down gently to zoom slowly, push down harder to zoom more rapidly.

Manual

Set this switch to 'manual' or 'm' to disable servo control and adjust zoom using the zoom ring on your lens barrel. In this mode, your lens will not accept zoom commands from the handgrip, URSA Cine, or ATEM switchers.

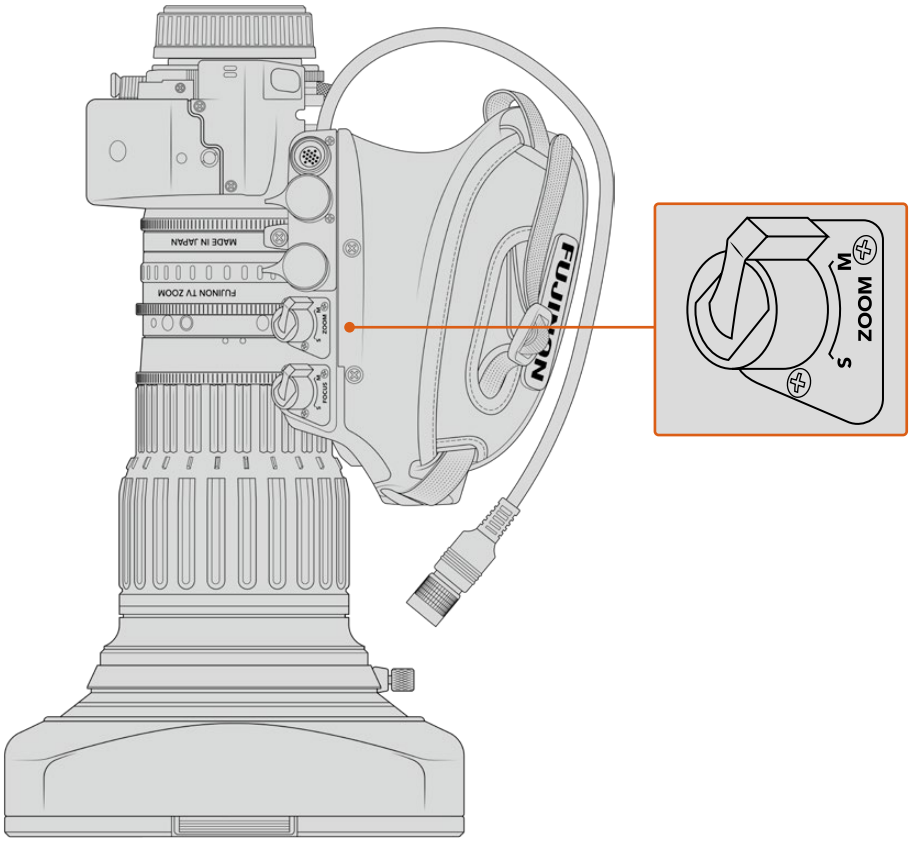

Focus

Some B4 lenses also have focus servo controls. If this control is present on your lens, you'll see a 'focus' switch on the underside of the handgrip with two settings, 'servo' and 'manual.'

Servo

Set this switch to ‘servo’ or ‘s’ to enable servo focus control. In this mode, your lens can accept focus commands from URSA Cine, Blackmagic Focus Demand or an ATEM switcher via the lens connector.

Manual

Set this switch to ‘manual’ to use the focus ring on the lens barrel to control focus. B4 lenses tend to autofocus quite slowly, so using manual control is more common.

NOTE Analog B4 lenses with servos are also supported although the camera will only power the zoom servo and support electronic iris control. Many of them are standard definition and may not have the standard 12 pin broadcast connector. If you are going to use an analog B4 lens, it’s important to make sure it is compatible with your camera first as some have limited feature sets. It is also worth testing them for their image circle coverage as some of them may reveal resolution and light fall off towards the edge of the frame.

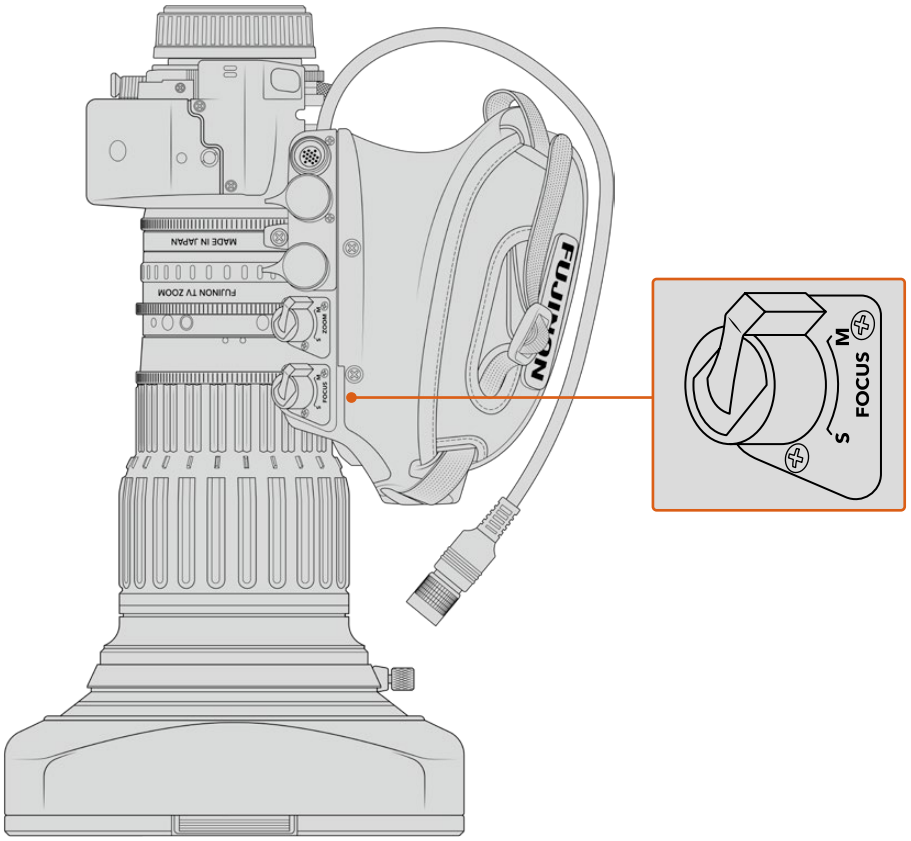

Ret and VTR

On a B4 lens, the ‘vtr’ button toggles recording and the ‘ret’ button is for ‘program return’. For information on how you can configure the ‘vtr’ and ‘ret’ button as function buttons, see the ‘set function button’ section in ‘setup settings’ later in this manual.

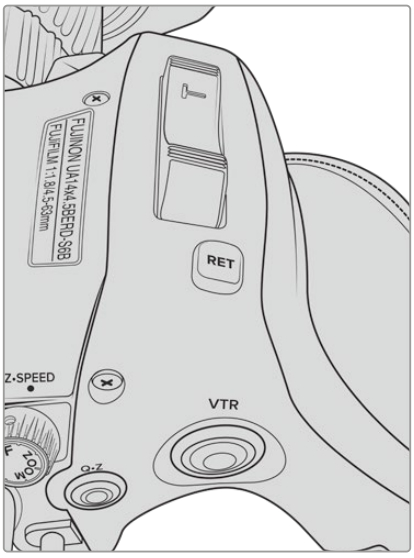

The ‘ret’ and ‘vtr’ buttons on a B4 lens

Setting the Back Focus on B4 Lenses

One of the huge advantages of B4 lenses is that they are designed to be ‘parfocal’ which means they hold focus all the way through the zoom range. This means you can zoom in, get focus on an object and then when you zoom out it will remain in focus.

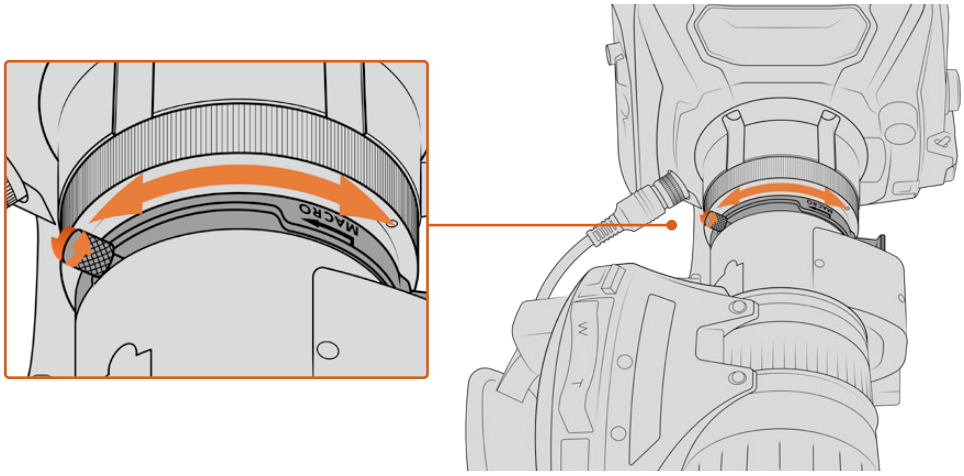

The back focus ring is typically located at the rear of the lens, close to the mount

Back focus is critical in ensuring that your HD or 4K B4 lenses retain focus right through the zoom range. When you first mount a B4 lens on your camera you should check that the back focus is correct. Back focus should also be checked when you swap lenses, and it’s a good idea to periodically check back focus at the start of major projects.

To check the back focus of a B4 lens:

1. Place a focus test chart, or a flat white item with good high contrast detail, approximately seventy feet, or as far away as possible, from the camera.
2. Set the iris on the lens wide open and compensate for exposure by using the built in NDs if you need to. You’ll want a shallow depth of field so you can exaggerate any focus issues.
3. Zoom into the chart and set focus.

4 Now zoom out. If you reach maximum wide and the focus remains sharp, then your back focus is correct and you don't need to make any adjustments.

   However, if you zoomed out and the chart drifted out of focus, the back focus is incorrect. Zoom all the way out and adjust the back focus ring on the rear of the lens close to the mount. The back focus ring typically has a twist knob used to loosen and tighten. Simply loosen the twist knob and rotate the ring until your chart is in focus.

5 Now zoom in and out slowly and check if your chart remains in focus all the way through the zoom.

6 Repeat steps 4 and 5, zooming in and out and making adjustments to the back focus ring. If your lens holds focus all the way through the zoom range your back focus is now set correctly.

Setting back focus on Fuji LA16x8 BRM and LA 30x7.8 BRM lenses

The process of setting back focus on a Fuji LA series lenses is slightly different. Instead of an external back focus ring this lens sets back focus electronically using a button underneath the hand grip.

To set back focus on a Fuji LA series lens:

1 Place a focus test chart, or a flat white item with good high contrast detail, approximately seventy feet, or as far away as possible, from the camera.

2 Set the zoom switch underneath the lens handgrip to 'servo'.

3 Locate the 'F.f.' button next to the zoom switch. Press and hold the 'F.f.' button for 5 seconds. The indicator LED on top of the zoom rocker will flash red.

4 The lens will automatically zoom in. Set focus using the focus ring. It's important to note that if you have Blackmagic Focus Demand attached you will need to unplug it from your camera to adjust the physical focus ring or adjust the focus using the focus demand for this step and step 5.

5 Press the 'F.f.' button again and the lens will automatically zoom out. Set focus using the focus ring.

6 Press the 'F.f.' button to confirm the settings. The top indicator LED will flash red. The electronic back focus on your Fuji LA series lens is now set.

7 Now zoom in and out slowly and check if your chart remains in focus all the way through the zoom.

8 If your lens holds focus all the way through the zoom range your back focus is now set correctly. If you need to make further adjustments, repeat steps 3 to 6.

TIP As temperature changes and wear over time can have subtle effects on the back focus, it's worth regularly checking the back focus on B4 lenses to ensure it stays accurate.

Using Box Lenses

Large studio box lenses like Fujinon's UA27x6.5 and UA125x8 and Canon's UHD Digisuper series lenses can also be used with URSA Cine Mount B4. These types of box lenses allow horizontal and vertical image stabilization on studio style 27x lenses, as well as extreme zoom ranges with 80x and even 125x magnification which are incredible for broadcasting sports and outdoor events.

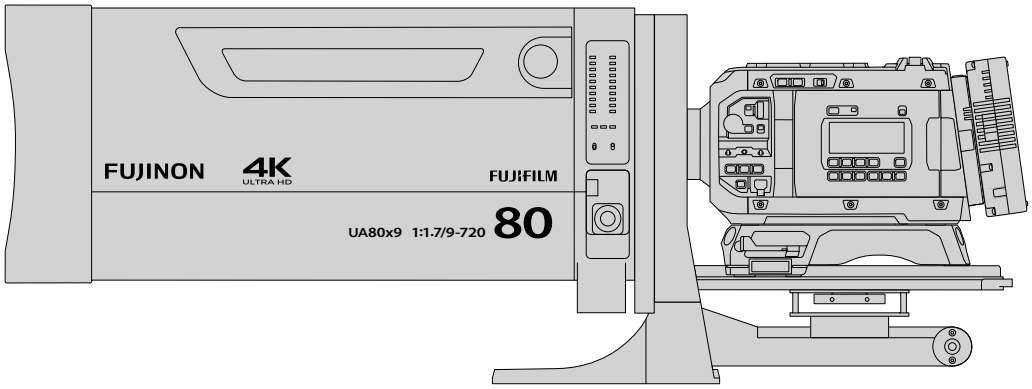

The large size of box lenses means that you will need to setup your camera correctly on a heavy duty tripod or pedestal, with adequate spacing. This is possible with URSA Cine Baseplate 15, a standard dovetail plate or a box lens adapter.

PL Servo Zoom Lenses

PL zoom lenses used for live sports and events can also be used with your URSA Cine camera. When using servo driven PL or EF lenses, the full frame or Super 35 area on the URSA Cine 12K LF's image sensor can be used to get the most out of these lenses.

Super 35mm PL lenses with full servo control of focus, iris and zoom include:

Brand	Series	Model	Range	Max. Aperture
Fujinon	Cabrio	ZK2.5x14-SAF	14-35mm	T2.9
Fujinon	Cabrio	ZK4.7x19-SAFB	19-90mm	T2.9
Fujinon	Cabrio	ZK12x25 with ESM-15A-SA	25-300mm	T3.5-3.85
Fujinon	Cabrio	ZK3.5x85-SAF	85-300mm	T2.9-T4
Fujinon	Cabrio	XK6x20	20-120mm	T3.5
Fujinon	Duvo	HZK25-1000	25-1000mm	T2.8-5
Fujinon	Duvo	HZK24-300	24-300mm	T2.9
Fujinon	Duvo	HZK14-100	14-100mm	T2.9
Canon	Cine-servo	CN7x17KAS S	17-120mm	T2.9-3.9
Canon	Cine-servo	CN10x25 IAS S/P1	25-250mm	T2.95-3.95
Canon	Cine-servo	CN20x50	50-1000mm	T5-8.9
Canon	Cine-servo	CN8x15	15-120mm	T2.95-T3.95
Canon	Cine-servo	CN30x40 IAS	40-1200mm	T5.0-10.8

Focus and zoom controls can also be used to drive focus and zoom from the pan handles in a studio environment on all of the servo zoom lenses listed above.

Fujinon Duvo lenses listed in the table above can also cover full frame if you engage their 1.5 extender. If you wish to operate the lenses in this mode, you can set your image sensor to one of the large format 12K, 8K, 4K or 4K live options to accomodate, rather than the 9K or 4K Live SMPTE-2110 Super 35 options

Hybrid Compact Servo Zoom Lenses

Recently, a new category of lenses known as ‘compact-servo’ zoom lenses have been introduced. These have some of the functionality of B4 and PL servo zoom lenses but use an EF mount. The zoom rocker for these lenses can be powered through the lens mount from URSA Cine and information such as lens name, iris, focus and zoom position values are all able to be read and recorded by URSA Cine’s lens metadata system.

Electronic control of the focus, iris and zoom is available with these lenses. When connected to a switcher, these can also be controlled remotely via ATEM Software Control. If you are operating in a live broadcast or studio environment, use of these lenses with Blackmagic Zoom and Focus Demands is possible provided the iris switch on the barrel of the lens is set to ‘A’, the focus switch is set to ‘AF’, and the zoom servo switch is set to ‘servo’.

Lenses in this range include:

- Canon CN-E 18-80mm T4.4 Compact-servo
- Canon CN-E 70-200mm T4.4 Compact-servo

Shimming Lens Mounts

What is a Shim?

Shims are thin disks of varying thickness that let you make fine adjustments to the distance between your lens and URSA Cine's sensor. This distance is commonly known as the flange focal distance, or back focus, and can change slightly due to variables such as lens age and the environmental conditions of your shoot. URSA Cine is designed so you can easily adjust back focus using shims.

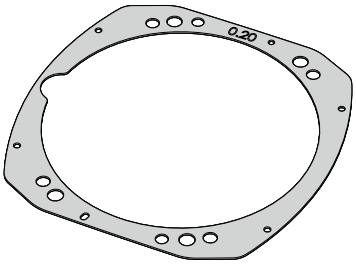

URSA Cine Shim

Shims are placed between the lens mount and the camera body so the distance from your subject to the sensor matches the focus marks on your lens. This is most important when using cine lenses which are manually focused and have very accurate focal distance markings on their barrels.

Your Blackmagic URSA Cine is supplied with its camera body and lens mounts already precisely shimmed. If you wish to change the shimming for any particular lens mount, Blackmagic URSA Cine Mount Shims contains shims of various thicknesses and can be purchased from your local Blackmagic Design reseller. You can easily add or remove shims to achieve your desired flange distance. The screws that hold the shims captive to the lens mount have a phillips PH0 screw head and need to be removed before shimming. When reattaching the shims, it is a good idea to sandwich them in with the 0.5mm shim at the front before tightening the screws to a torque rating of 0.19Nm.

See the 'interchangeable lens mount' section for more information on attaching lens mounts to URSA Cine.

Blackmagic Camera Setup

The Blackmagic Camera Setup utility is an administration software application you can download from the Blackmagic Design Support Center at www.blackmagicdesign.com/support

This software lets you update your camera with the latest features, so it is worth regularly checking the Blackmagic Design website for new versions.



The Blackmagic Camera Setup utility lets you update your URSA Cine and change administration settings

Updating Camera Software for a Mac

After downloading the Blackmagic Camera Setup utility software and unzipping the downloaded file, open the resulting disk image to reveal the Blackmagic Camera Setup Installer.

Launch the installer and follow the on screen instructions. After the installation has finished, go to your applications folder and open the Blackmagic Cameras folder where you'll find this manual, the Blackmagic Camera setup utility, plus a documents folder containing readme files and information. You'll also find an uninstaller for when updating to later versions of Blackmagic Camera Setup.

Updating Camera Software for a Windows Computer

After downloading the Blackmagic Camera Setup utility software and unzipping the downloaded file, you should see a Blackmagic Camera Setup folder containing this PDF manual and the Blackmagic Camera Setup Installer. Double click the installer and follow the on screen prompts to complete the installation.

Click the start button and select ‘all apps’. Scroll down to the Blackmagic design folder. From here you can launch Blackmagic Camera Setup.

How to Update the Camera Software

After installing the latest Blackmagic Camera Setup utility on your computer, connect a USB cable between the computer and your URSA Cine. Use the left USB port on the assist station above the LCD touchscreen. Simply open the rubber cap to access the port.

Launch the Blackmagic Camera Setup utility and follow the on screen prompts to update the camera software.

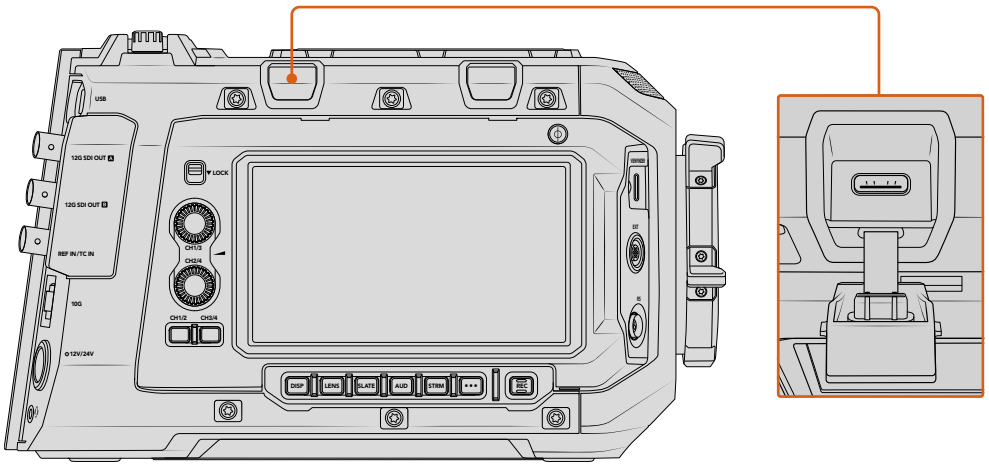

The USB-C port near the rear panel is used to update the camera software

NOTE If you are updating your camera using a laptop computer, it’s important to connect your laptop to mains power during the update process.

To update optional accessories including URSA Cine EVF, URSA Cine Studio Viewfinder and Blackmagic PYXIS monitor, connect the accessory directly to your computer using a USB-C cable. Once connected, follow the prompts in the utility to update the software.

Setup Settings

In addition to updating your camera, the setup utility provides a range of administration settings for purposes such as naming your URSA Cine, configuring network settings and access, assigning a secure certificate, and more. This section describes all the settings and how they work.

Setup

If you have more than one URSA Cine, you may wish to give each unit a discrete name to make them easy to identify. You can do this by entering a new name into the name field and clicking the ‘set’ button. It’s worth noting that changing the name of the camera will invalidate any digital certificates in use, so it’s worth changing the name before generating a certificate signing request or self signed certificate. More details on digital certificates is available in the ‘secure certificate’ information later in this section of the manual.



Date and Time

Set your date and time automatically by ticking the ‘set date and time automatically’ checkbox. When this checkbox is enabled, your camera will use the network time protocol server set in the NTP field. The default NTP server is time.cloudflare.com, but you can also manually enter an alternate NTP server and then click on ‘set’.

If you are entering your date and time manually, use the fields to enter your date, time and time zone. Setting the date and time correctly ensures your recorded clips have the same time and date information as your network and also prevents conflicts that can occur with some network storage systems.

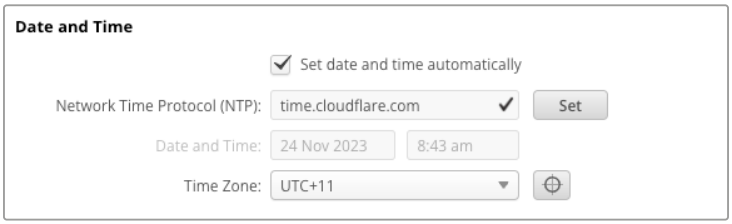

Network Location

The network location is the name for your URSA Cine that will appear as the DNS name on the network. This is based on the name field at the top of the setup tab in the utility. It’s worth noting that numeric prefixes and punctuation will be ignored.



Network Settings

URSA Cine features 4 different network connections including WiFi, Ethernet, USB Ethernet and Mobile for smartphone tethering. These can be used to connect to a local network or the Internet for streaming, connecting to a SMPTE-2110 media network or for access to the camera settings using the Blackmagic Camera Setup utility or REST api. Each network connection on the camera contains its own MAC address and network configuration. This allows you to set discrete networking settings for each port.

Click the pencil icon to adjust the settings for each network connection.

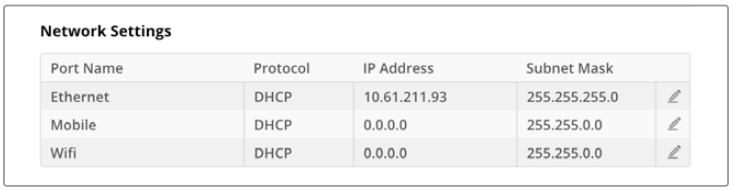

Protocol

To control your camera remotely via Ethernet, or when connected to ATEM Television Studio HD8 ISO as a remote source on your network, the camera needs to be on the same network as your other equipment using DHCP or by manually adding a fixed IP address.

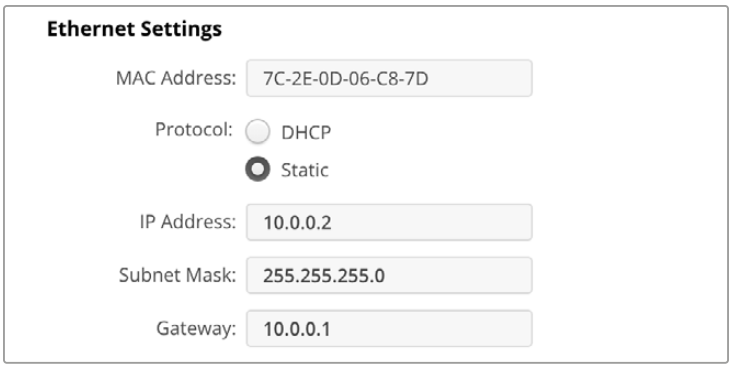

DHCP	Your camera is set to DHCP by default. The dynamic host configuration protocol, or DHCP, is a service on network servers that automatically finds your camera and assigns an IP address. The DHCP is a great service that makes it easy to connect equipment via Ethernet and ensure their IP addresses do not conflict with each other. Most computers and network switchers support DHCP.
Static IP	When 'static IP' is selected, you can enter your network details manually. When setting IP addresses manually so all units can communicate, they must share the same subnet mask and gateway settings. If there are other devices on the network that have the same identifying number in their IP address, there will be a conflict and the units won't connect. If you encounter a conflict, simply change the identifying number in the unit's IP address.

Primary and Secondary DNS

URSA Cine ships with two DNS servers added. To remove a DNS server entry click the address to highlight it and click the minus icon. To add a DNS entry, click the plus icon and enter the address into the field.

Network Access

Your URSA Cine can be accessed via a network for transferring files. Access will be disabled by default, but you can choose to enable individually or via a username and password for added security when using the web manager.

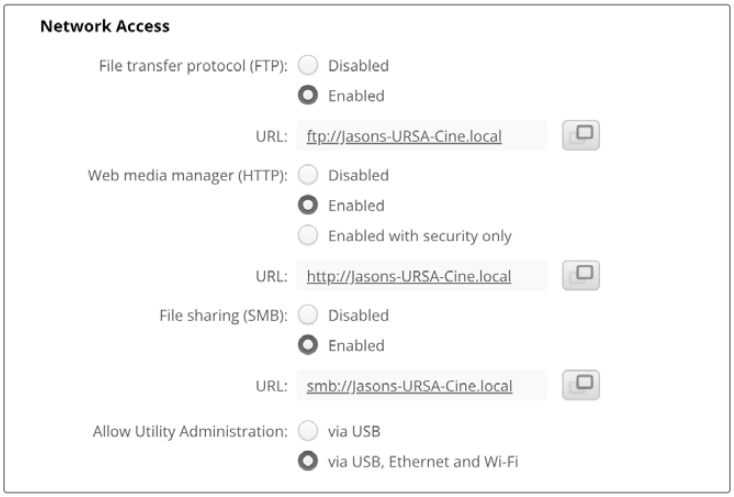

File Transfer Protocol

Enable or disable access via FTP using the checkbox. If you are supplying access via an FTP client such as CyberDuck, click the icon to copy the FTP address. For more information, refer to the section ‘transferring files over a network’.

File Sharing

At the bottom left corner you will notice a button named ‘Show in Finder’ on a Mac or ‘Show in Explorer’ on Windows. This button lets you access your media files using your computer’s file browser. All you need to do is enable ‘file sharing’ and then click on the ‘show in Finder’ button. You can also copy the URL and paste the file path into your browser.

Your operating system may prompt you to allow access to the drive.

Web Media Manager

Enabling web media manager lets you download clips from your camera’s media storage over your network, or even delete unwanted clips if you need to free up disk space. When you click on the link or copy and paste it into your web browser a simple interface will open where you can access the media.

Enable access via HTTP by selecting the ‘enabled’ checkbox. You can also set up a secure certificate using the ‘enabled with security only’ option. When using a digital certificate, connections to web media manager are encrypted via HTTPS. More information on digital certificates is available in the ‘secure certificate’ section.

REST API also uses HTTP and this means enabling access to media via the web media manager also enables camera control via REST API.

Allow Utility Administration

Blackmagic Camera Setup can be accessed when your camera is connected via the network or via USB. To prevent users having access via the network, select ‘via USB’.

Secure Login Settings

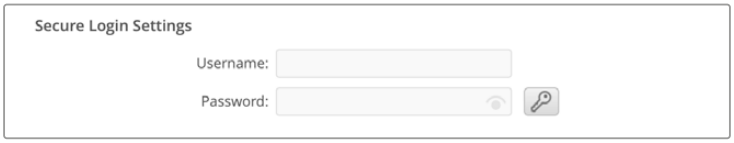

If you have selected ‘enabled with security’ for web media manager access you will need to enter a username and password. Type a username and password and click ‘save’. The password field will appear empty once a password is entered. Once a username and password is set, you will need to enter it when accessing the web media manager.

Secure Certificate

To enable web media manager access via HTTPS, you will require a secure certificate. This digital certificate acts as an identification card for your URSA Cine so that any incoming connections can confirm they are connecting to the correct unit. Along with confirming the identity of the unit, using a secure certificate ensures data transmitted between your camera and a computer or server will be encrypted. When using the secure login settings the connection will not only be encrypted but require authentication for access.

There are two certificate types you can use with your camera. A secure certificate signed by a certificate authority, or a self signed certificate. A self signed certificate may be secure enough for some user workflows, for instance only accessing the camera via a local network.

To generate a self signed certificate click on ‘create certificate’. You will be prompted to confirm you understand the risks with using a self signed certificate. Once you click on ‘create’, the certificate details will autofill the ‘domain’, ‘issuer’ and ‘valid until’ fields in Blackmagic Camera Setup.

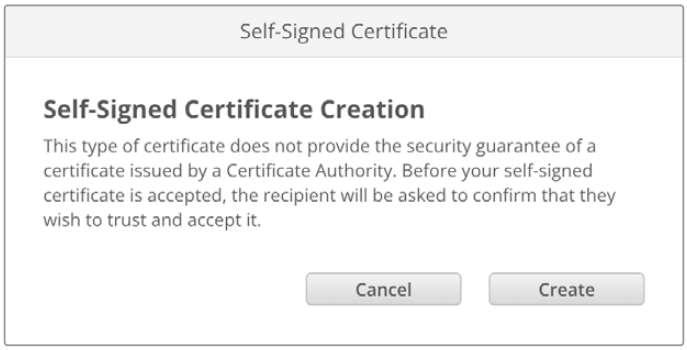

Following a factory reset, any current certificate will be deleted, but you can also remove it at any time by clicking on the ‘remove’ button and following the prompts.

When using a self signed certificate to access media files using HTTPS, your web browser will alert you to the risks of accessing the site. Some browsers will allow you to proceed once you confirm you understand the risks, however other web browsers may prevent you from proceeding at all.

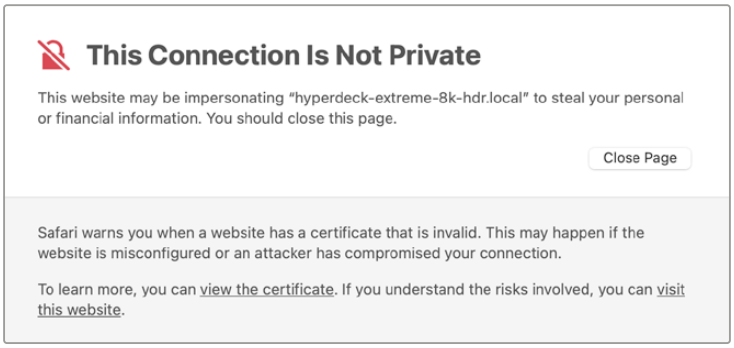

To ensure access is granted to any web browser, you will need to use a signed certificate. To obtain a signed certificate, you first need to generate a certificate signing request, or CSR, using Blackmagic Camera Setup. This signing request is then sent to a certificate authority, also known as a CA, or your IT department to be signed. Once completed, a signed certificate with a .cert, .crt or .pem file extension will be returned which you can import into your camera.

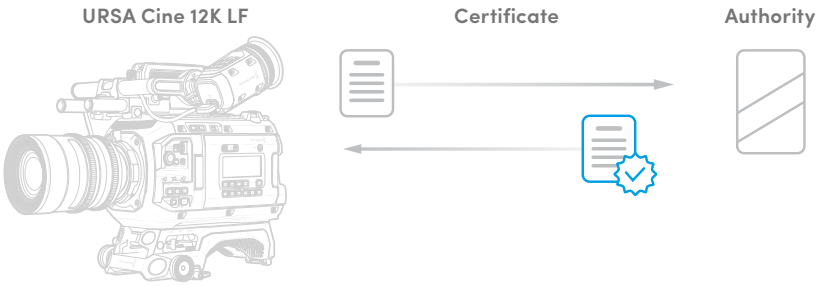

To generate the certificate signing request CSR:

1 Click on the 'generate signing request' button.



2 A window will appear prompting you to enter a common name and subject alternative name for your camera. Adjust any other details as required using the table below.

Information	Description	Example
Common Name	The domain name you will use	camera.melbourne.com
Subject Alternative Name	An alternate domain name	camera.melbourne.net
Country	Country for your organization	AU
State	Province, region, county or state	Victoria
Location	Town, city, village etc. name	South Melbourne
Organization Name	Name of your organization	Blackmagic Design

3 Once you have filled in the certificate details, press 'generate'.

When you generate a .csr you will also be creating a public key and private key at the same time. The public key will be included with the signing request while the private key will remain with the unit. Once the CA or IT department have verified the information in the CSR with your organization, they will generate a signed certificate with the above details along with your public key.

Once imported, your camera will use the public and private key to confirm the identity of the camera and to encrypt and decrypt data share via HTTPS.

Importing a signed certificate:

1. Click on ‘import signed certificate’.
2. Navigate to the location of the signed certificate using the file browser and once the file is selected click on ‘open’.

The domain, issuer and valid until fields will update with the information from your CA. Generally, a signed certificate will be valid for about a year so the process will need to be repeated as you reach the expiration date.

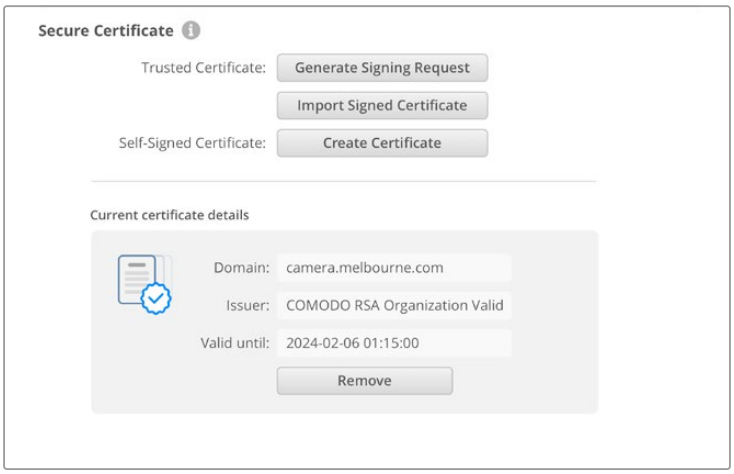

Since a domain name was selected, you will need to speak to your IT department about resolving the DNS entry for your URSA Cine. This will point all traffic for the IP address of the camera to the selected domain address in the signing request. This will also be the HTTPS address you use to access files via the web media manager, for example https://camera.melbourne

Reset

Select ‘factory reset’ to restore your camera to factory settings. A factory reset will invalidate the current certificate. If a secure certificate is being used you will need to generate a new certificate signing request to be signed by a certificate authority or IT department.

Transferring Files over a Network

When connected to a network, URSA Cine can transfer files using the following protocols.

HTTP
Hypertext transfer protocol.

HTTPS
Hypertext transfer protocol secure.

FTP
File transfer protocol.

SMB
Server message block.

These protocol options let you copy files directly from your camera's storage media to your computer via a network with the fast speeds a local network can provide. For example, you can copy clips and start editing them as soon as you have finished recording.

Access to your URSA Cine via any of these protocols can be enabled or disabled via the Blackmagic Camera Setup utility. For example, you could disable FTP access and enable HTTPS access at the same time.

Connecting to your Camera via HTTPS

To access your camera via the web media manager you will need the URL available via the network access settings. Network access settings appear in Blackmagic Camera Setup when your computer is connected via USB or Ethernet but are disabled when only Ethernet is connected.

1. Using a USB-C cable, connect your computer to URSA Cine via the USB port on top ledge closest to the rear panel and open Camera Setup. You should see a USB connection icon next to the unit name. Click on the circular icon or anywhere on the product image to open the settings.
2. When using a self signed certificate, navigate to the network access settings and click on the copy icon beside the URL. This URL is based on the name of your camera. To modify the URL, modify the name of the unit.

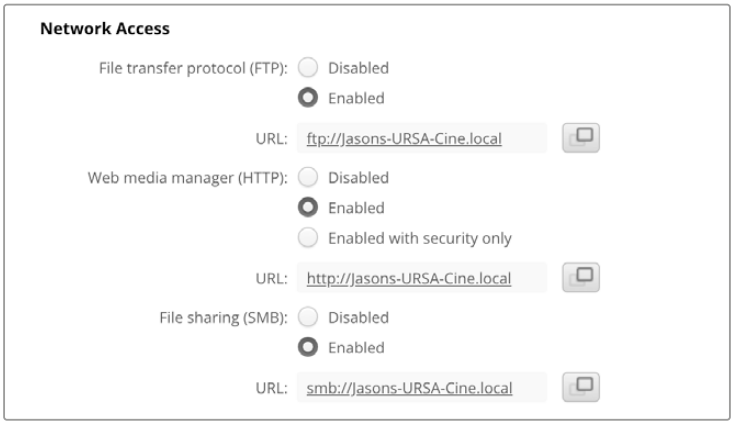

When using a self signed certificate, click on the link

3 If you have imported a certificate signed by a CA or IT department, copy and paste the address in the domain field for the current certificate.

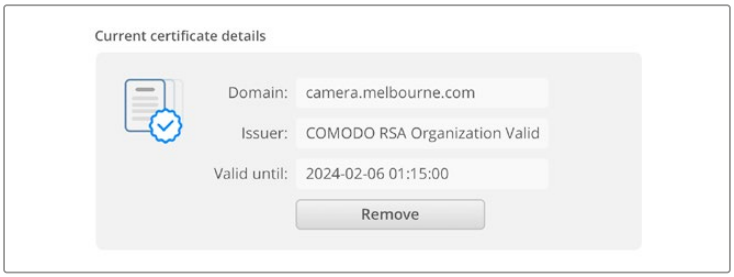

Copy the domain address and paste into a browser

4 Open your web browser and paste the address into a new window. If you have enabled access with security only you will be prompted to enter the username and password set in Camera Setup.

When using a self signed certificate, a browser warning will appear regarding the privacy of the connection. This means a trusted signed certificate has not been imported via the Camera Setup utility

To continue without a valid and trusted certificate, follow your browser prompts to acknowledge the risks and proceed to the website.

Transferring Files Using Web Media Manager

When you first open the web media manager browser view you will see a list of the storage media connected to your camera.

Double click a media folder to reveal the contents.

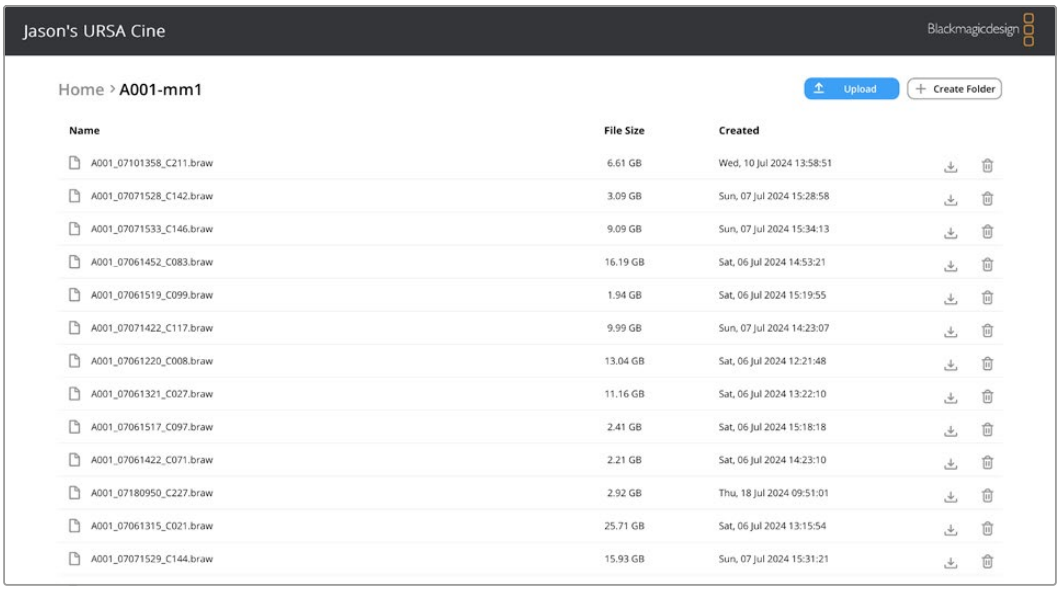

Click the download button to download files or the trash icon to delete them

To download files, use the arrow icon on the far right. Your browser may prompt you to allow downloads from the site. Click on ‘allow’. To delete a file, click the trash can icon and a delete file window will appear. Click ‘delete’ to proceed.

Transferring Files via FTP

With your computer and Blackmagic URSA Cine on the same network, all you need is an ftp client and your camera's IP address or the FTP URL in the Camera Setup utility.

1 Download and install an FTP client on the computer you want to connect your camera to. We recommend Cyberduck, FileZilla or Transmit but most FTP applications will work. Cyberduck and FileZilla are free downloads.

2 With your Blackmagic URSA Cine connected to your network, open Camera Setup and click on URL or press the copy icon to paste it manually. You may need to click the link a second time if the FTP program doesn't open a connection.

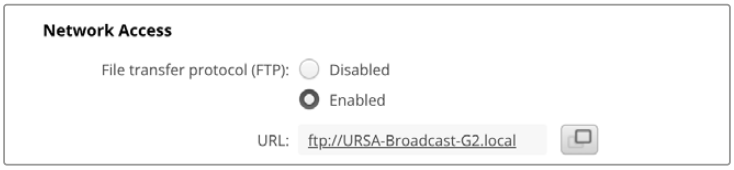

3 If you are manually opening an FTP connection, paste the URL into the client's server field. Check 'anonymous login' if available.

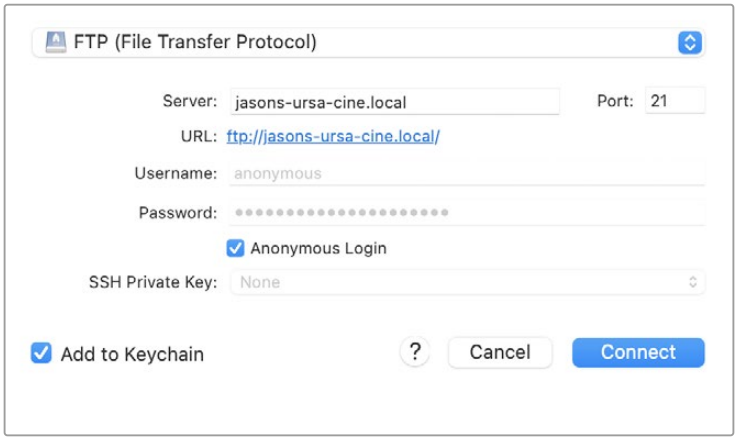

4 Expand a media storage folder from the list to view your recorded clips. You can now drag and drop files using the FTP interface.

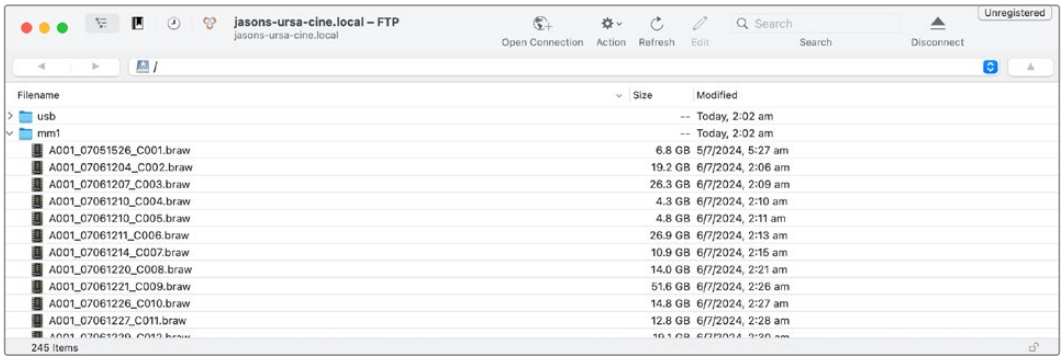

SMPTE-2110 Settings

The ST-2110 tab provides settings for routing SMPTE-2110 streams along with settings for PTP, multicast address and identifying ancillary data. This tab is only visible when the resolution on URSA Cine is set to '4K Live SMPTE-2110'.

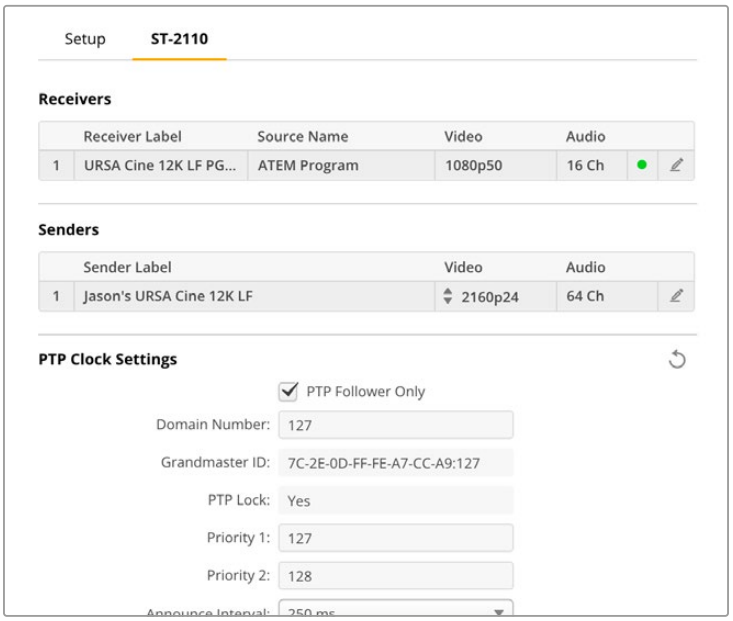

Receivers

You can add labels, route incoming sources and check the connection status using the receiver settings in the Camera Setup utility.

To route an incoming source:

1 Click the pencil icon to the right of the receiver field. A window will appear for the selected input where you can change the receiver label and select an available stream.

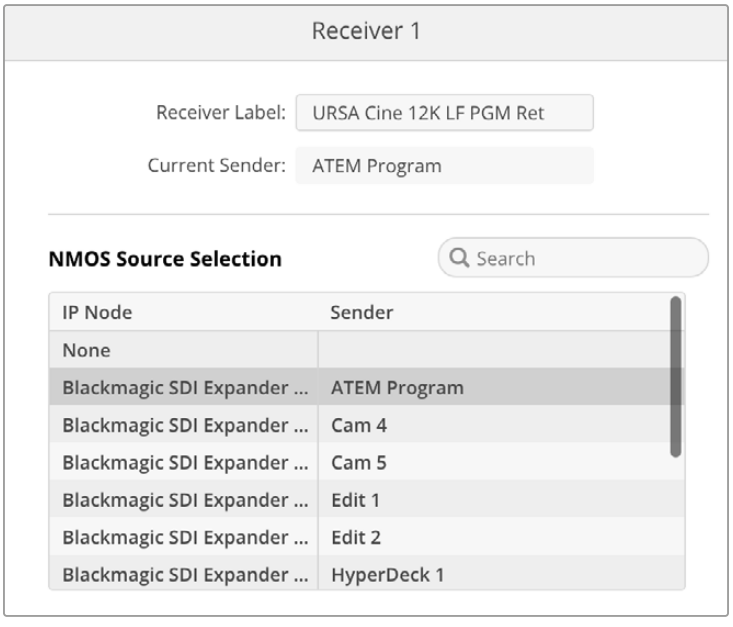

2 URSA Cine has a default receiver label or you can enter a custom name into the receiver label field. The label will appear on any connected hardware or software with NMOS control to make it easy to recognize.

3 Using the NMOS source selection window select a source for the receiver. Sources are identified by the name of the 2110 device and the available stream label. Once selected the label will appear in the current sender field so you can see at a glance what stream is being received.

To add a source manually using an SDP:

1 Select the receiver you want to route to and click the pencil icon to adjust the settings.

2 Click the import button at the bottom of the window. Navigate to the location of the SDP and select it.

3 Click the 'choose' button. You will return to the receiver window.

4 Click 'commit' to confirm your choice. The current sender field will now be populated with the name of the source.

Once you've routed a stream to the camera you can view the status of the connection in the receivers table.

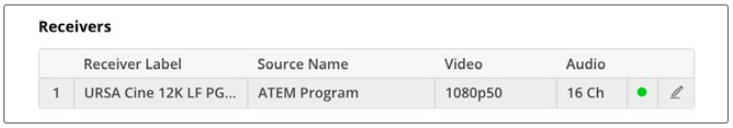

Receiver Label

Displays the name of the 2110 products connected to the network or point to point.

Source Name

The label name for the sender is listed here. This can help identify each stream when you have more than one URSA Cine connected to the media network.

Video

Displays the video resolution of the stream routed to the receiver.

Audio

Indicates whether audio is present and how many channels the audio may have.

Signal Status Indicator

Colored dots indicate the status of the signal.

●	SMPTE-2110 stream is routed and receiving audio, video or both
●	SMPTE-2110 stream is routed but no signal detected
●	No signal is routed.

Senders

The senders table displays the labels for the SMPTE-2110 stream out of the camera along with information on any connected source video and audio.

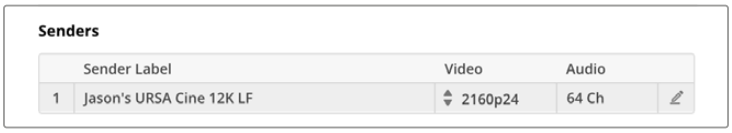

To adjust a sender's settings, click the pencil icon on the right to open the sender settings window. From here, you can modify the label, select the output video standard and configure the multicast addresses.

Sender Label

Enter a custom label for the sender. This name will appear as a source when routing streams using the Camera Setup utility or an NMOS controller.



Output Video Standard

URSA Cine supports 2160p at frame rates between 2160p23.98 and 2160p60.

To set the camera output standard click the menu and choose from the options.

Network Address Mode

Each video, audio and ancillary stream output from your URSA Cine uses a discrete multicast address per network. These are set by default or you can manually update them.

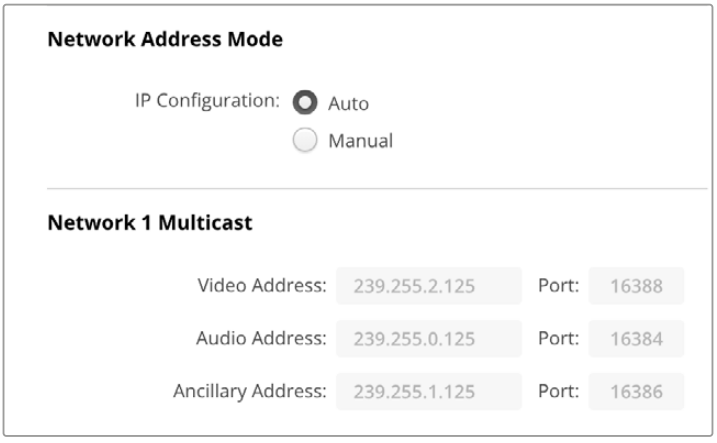

To change the multicast output address:

1. Click the ‘manual’ radio button beside IP configuration.
2. Under ‘network 1 multicast’ enter a new IP address and port number into the fields and click the ‘save’ button at the lower right of the utility.

Sender SDP

SDPs can be used instead of an NMOS controller when you want to manually configure or distribute stream settings without relying on automated network control. This allows streams to be set up directly using a file based workflow.

To export an SDP, click the ‘export’ button and save the file to the desired location. This file can then be sent to users and imported directly into their SMPTE-2110 hardware or software.

Once you’ve finished editing the sender details or exporting an SDP, click the ‘save’ button.

PTP Clock Settings

The PTP settings let you configure the settings for the PTP grandmaster.

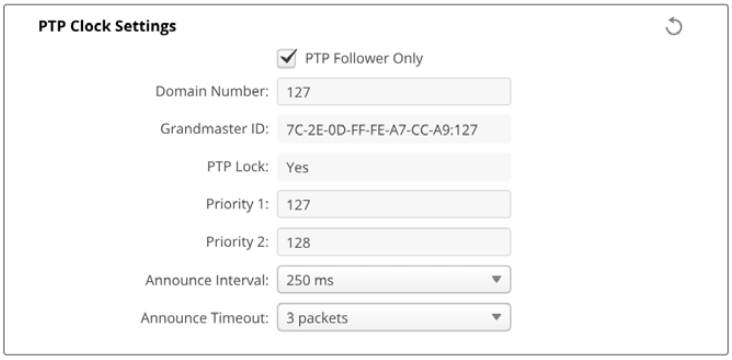

When connecting to a network switch with a PTP grandmaster, the camera needs to be set to ‘PTP follower only’ mode to prevent a timing conflict. If you are connecting two Blackmagic 2110 IP products point to point, set one to be the follower by ticking the checkbox.

Domain Number

Enter the domain number to match that of the PTP grandmaster. This is commonly 127 but can be changed by entering a different domain number in the field.

Grandmaster ID

The grandmaster ID address field displays the MAC address of the PTP grandmaster. This is either a separate grandmaster unit, or a Blackmagic 2110 converter or Ethernet switch.

PTP Lock

The PTP lock field will acknowledge when the converter is locked to a PTP clock via Ethernet.

Priority

When a converter is not set to ‘PTP follower only’ it can become a PTP master. The priority of the unit to become the master is set here. The lower the number the higher the priority.

Announce Interval and Timeout

The announce interval and timeout fields need to match the specifications of the PTP grandmaster which transmits sync messages typically every two seconds or 2000 ms. To change the frequency of the message, use the menu to select a different time. The ranges available for announce interval and announce timeout will depend on your PTP grandmaster.

NMOS Registry

Use the NMOS registry settings to set the preference for NMOS control.

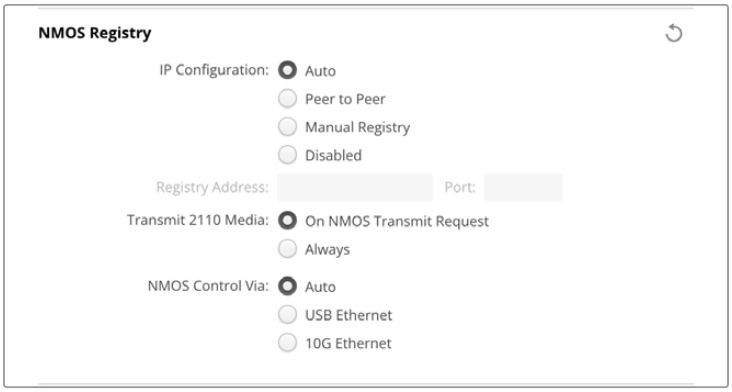

IP Configuration

Set the IP configuration to auto, peer to peer or manual registry to enter a registry address and port number. Turn off NMOS over IP by clicking the ‘disabled’ radio button.

Transmit 2110 Media

Not all NMOS controllers behave the same way. Some automatically start a stream when an NMOS routing request is made, allowing routing and stream initiation in a single step. Others only establish the route and do not start the stream. You can configure this behavior using the ‘transmit 2110 media’ setting.

If your NMOS controller automatically starts streams when a route is selected, choose ‘on NMOS transmit request’. If your controller only establishes the route, choose ‘always’ so the converter starts transmitting the stream automatically.

Blackmagic NMOS controllers, including Blackmagic Ethernet Switch and Videohub Smart Control, start transmitting when a route is selected regardless of which ‘transmit 2110 media’ setting is selected.

NMOS Control Via

NMOS messages can be sent and received over either the USB Ethernet connection or the 10G Ethernet connection. Set ‘auto’ to use either connection. Alternatively, select ‘USB Ethernet’ when connecting to a dedicated NMOS control network using a USB to Ethernet adapter connected to the rear USB-C port on the camera or ‘10G Ethernet’ to send and receive requests from the media network.

Accessories

URSA Cine has 4 USB ports which can be used to connect a variety of accessories, from the URSA Cine EVF, Blackmagic URSA Cine Studio Viewfinder, USB-C display port monitors, smart phone data tethering, plus Blackmagic Zoom and Focus Demands.

This section of the manual describes the different accessories you can attach to your URSA Cine.

Blackmagic URSA Cine Studio Viewfinder

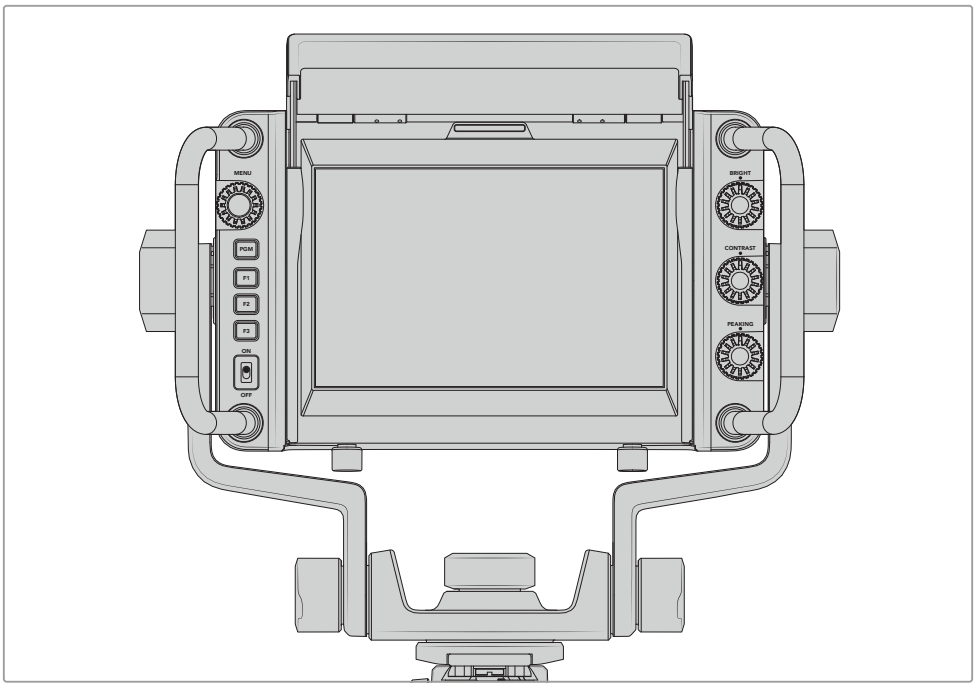

Blackmagic URSA Cine Studio Viewfinder is a powerful touchscreen viewfinder that allows you to turn your URSA Cine into a professional live production camera. The studio viewfinder features a bright 7” touchscreen and has a large easily viewable tally light, control knobs, large handles, sun hood and variable tension articulated mount. These features make it easy to stand behind the camera and comfortably follow the action for extended periods of time, especially when filming live concerts, sports, and other long events. The URSA Cine Studio Viewfinder is perfect for professional live production or multi-cam recording in the studio or on location.

Mounting and Connecting to Blackmagic URSA Cine

When using the Blackmagic URSA Cine Studio Viewfinder you have the option of mounting the unit to the camera in a number of ways.

Using the supplied VLock mount plate you can mount the Blackmagic URSA Cine Studio Viewfinder directly to the top of your camera.

Attach the V-lock mount plate to the top of the camera with the supplied 1/4” screws. As this will make the center of gravity on the camera much higher. We recommend doing this while the camera is attached to a tripod for stability.

Using URSA Cine with the URSA Cine Baseplate 15 or Baseplate 19 provides a sturdy base and allows the use of a 12” or 18” standard dovetail plate for additional stability and a large range of forwards and backwards adjustment for balance.



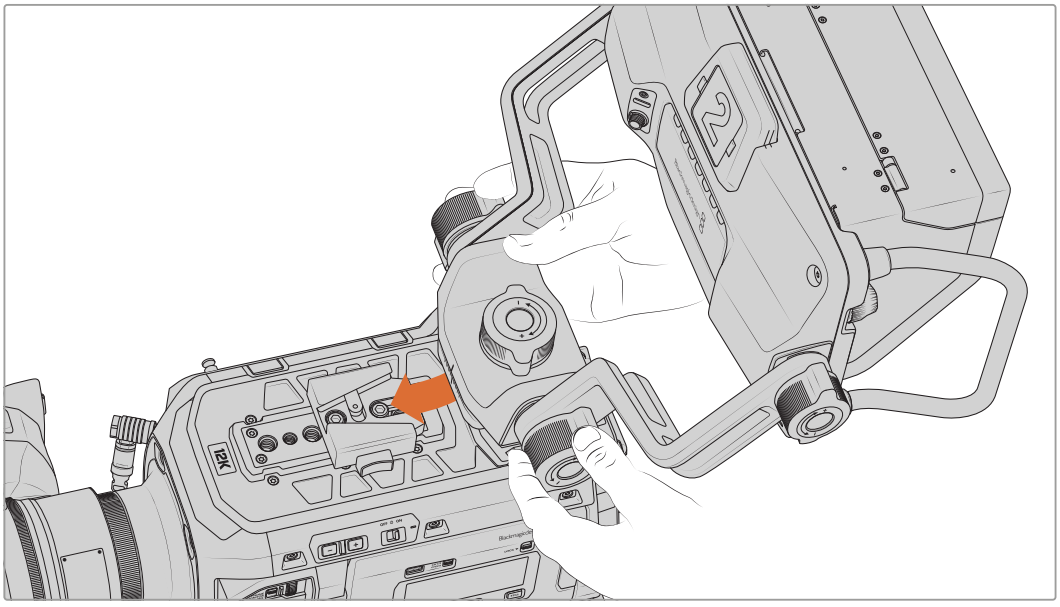

V-Lock mount plate being attached to the V-Lock mount on URSA Cine

To connect your Blackmagic URSA Cine Studio Viewfinder to your camera, simply connect the viewfinder's attached cables to your camera's 'viewfinder' USB-C port.

The power switch on the viewfinder will then allow you to turn on the viewfinder instantly when your camera is powered. If operating in an extremely bright environment, you can increase the brightness range of your studio viewfinder by supplying additional power through the studio viewfinder's barrel connector. This allows the full brightness range from the LCD screen and tally light. The barrel connector is 12V compatible so you could run a cable from the regulated 12V 1.5amp output on the URSA Cine battery plate.

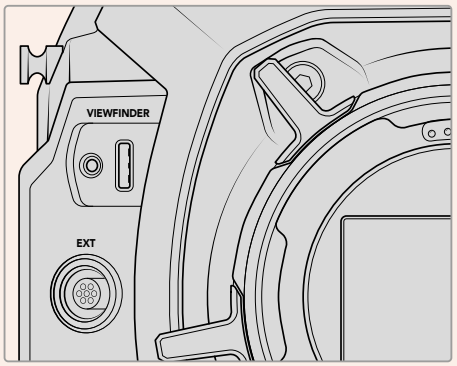

Plug your studio viewfinder into the 'viewfinder' USB-C port near the lens mount

Adjusting the Blackmagic URSA Studio Viewfinder

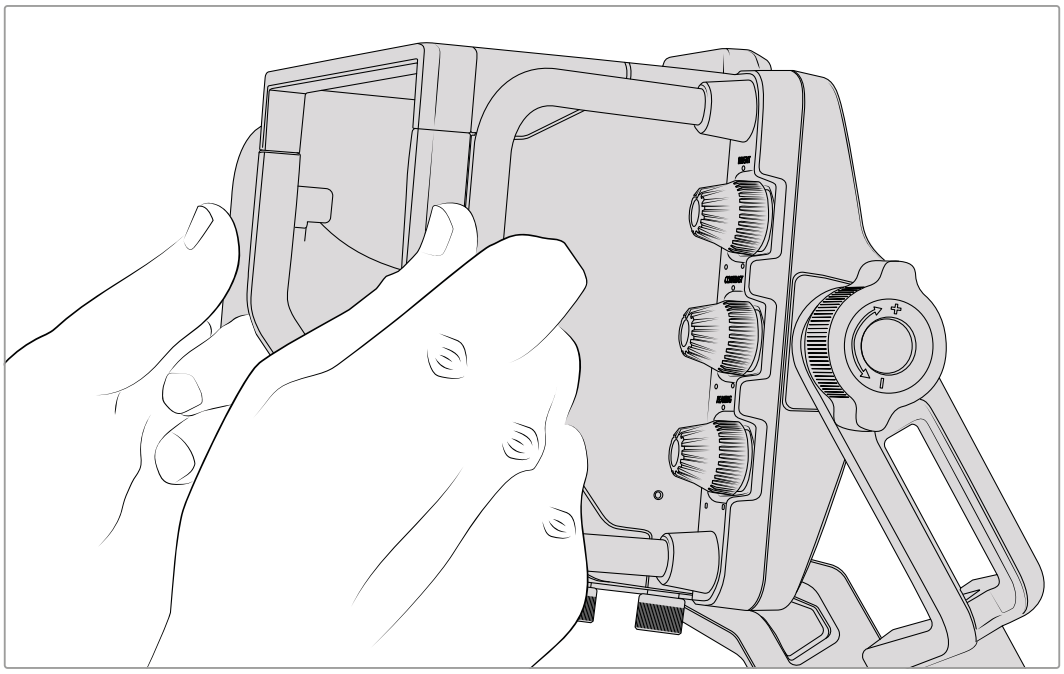

Blackmagic URSA Cine Studio Viewfinder features large handles and variable tension articulated mounting that allow you to adjust the position and angle of the viewfinder. The large handles allow you to quickly and easily take hold of the viewfinder and adjust the angle and direction of the unit. Combined with the sun hood the handles also help to protect the screen from damage, which means that you can store the fully assembled studio viewfinder in a carry case without disassembly. The large handles also allow you easily to pick up and carry the unit between locations.

The supplied mount features tension dials for pan and tilt, with additional tension dials on either side of the viewfinder for additional friction control. The left hand dial allows you to adjust the drag friction of the arm and the right hand dial allows you to lock the viewfinder in place once you have found the angle you require.

These tension dials have a very large range of tension adjustment, allowing you to select a specific amount of resistance. This allows you to easily pan and tilt the viewfinder to a precise position.

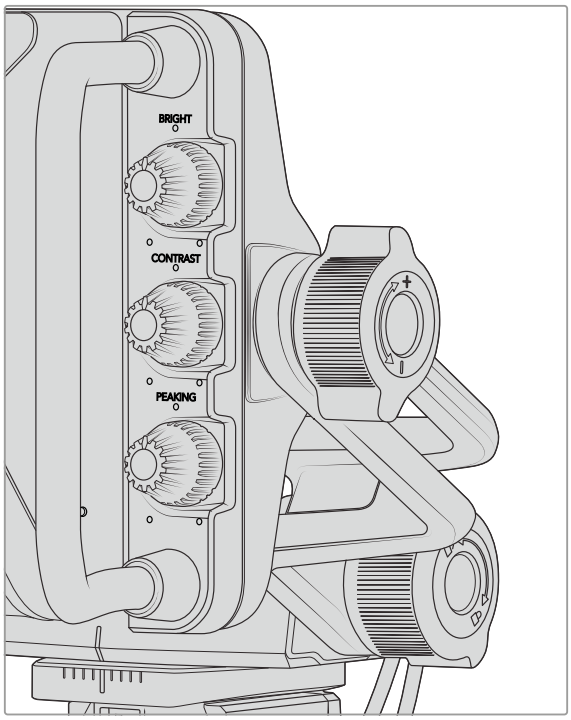

Tension dials on either side of the viewfinder

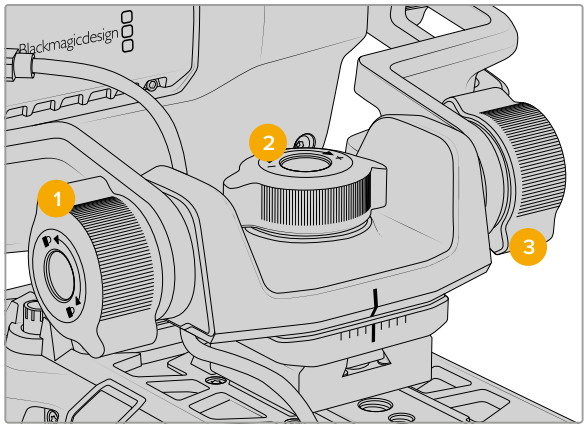

1 **Tilt Lock Dial**
Locks the angle of tilt on the viewfinder mechanism.

2 **Pan Tension Dial**
Controls pan tension.

3 **Tilt Tension Dial**
Controls tilt tension.

TIP The center tension dial on the supplied mount controls pan tension, and can be loosened to allow you to take hold of the viewfinder and move the camera independently. This means that you can film things like motorsport, where you need to pan the camera left and right to follow the action, whilst holding the viewfinder positioned towards your eyes. A visual guide on the mount helps to ensure that the viewfinder can easily be returned to the center.

Sun hood

The sun hood helps you to see the screen in bright or sunny conditions. To attach the sun hood, slide it over the top of the studio viewfinder and push it into place, securing it with the two captive screws on the base of the sun hood. The top section of the visor is adjustable, and can raise and lower to provide additional viewing angles. The sun hood provides additional protection for the 7” screen, and can be removed quickly and easily if desired or to access the USB-C connector for software updates.

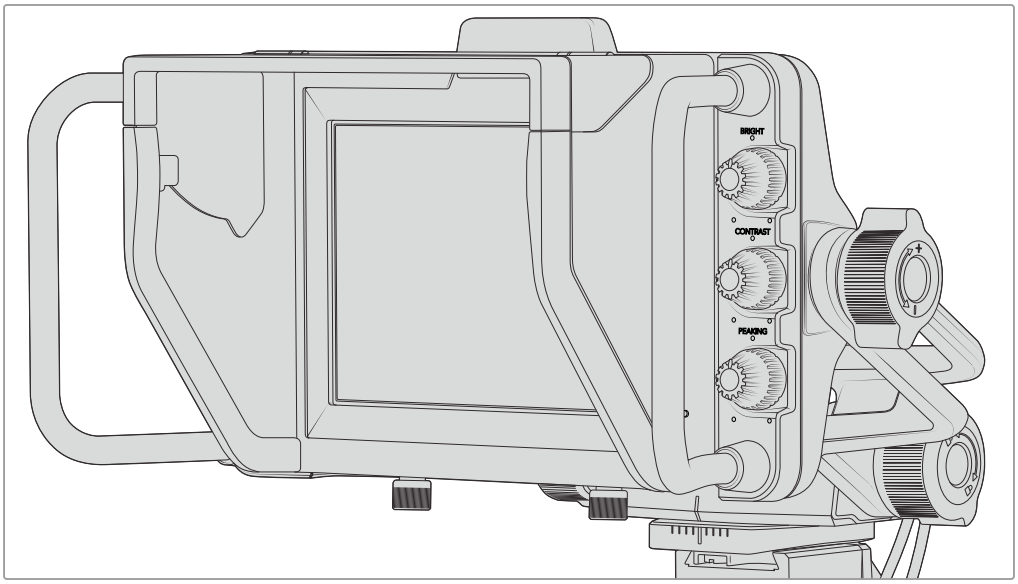

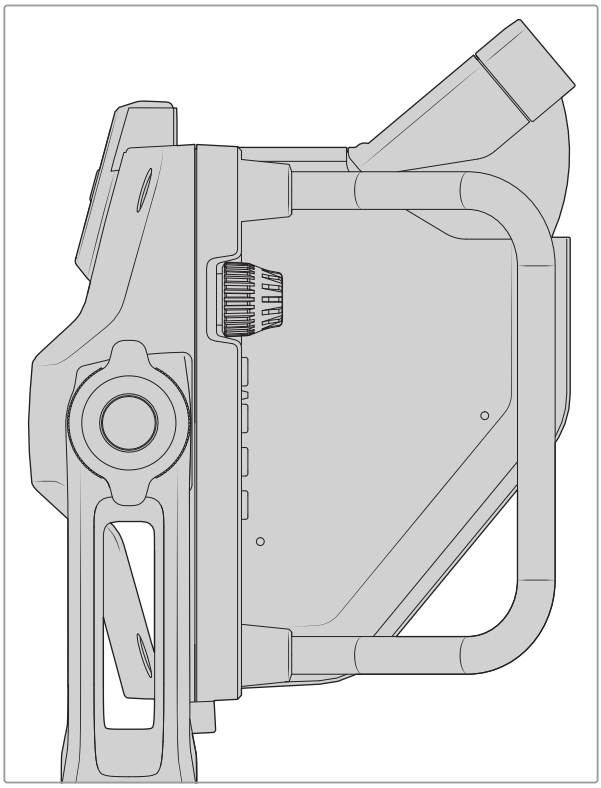

Sun hood and adjustable visor

Button Features

The dials down the right hand side let you change brightness, contrast, peaking quickly and easily. The dials are ergonomically designed so you can adjust the dials from the side with your thumb when using the sun hood, or with two fingers for finer more controlled adjustment.

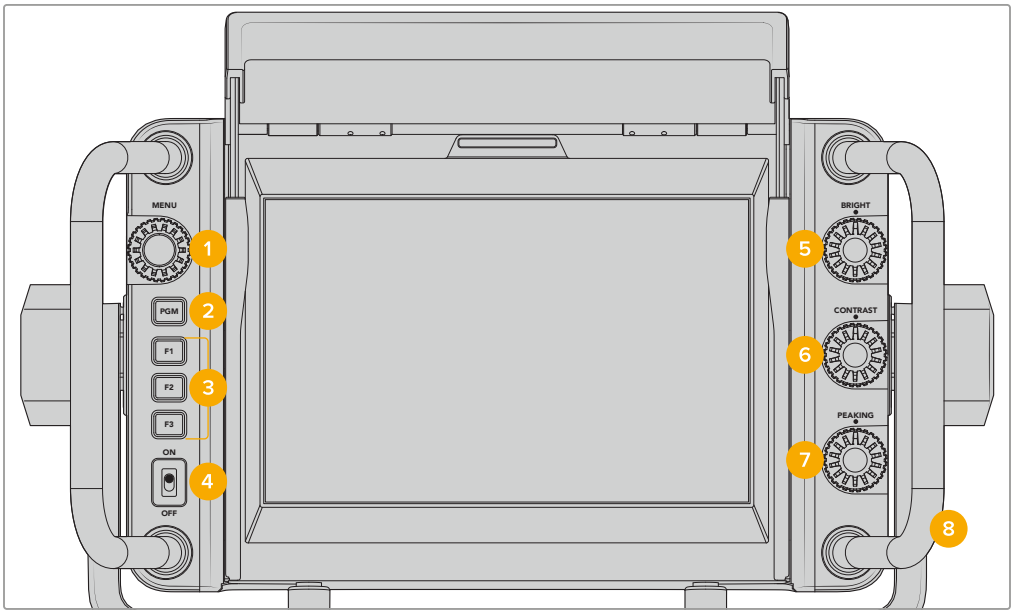

1 **Menu Dial**
The push button ‘menu’ dial allows you to enter the menu, and navigate through the viewfinder settings.

2 **PGM button**
Similar to the F1 and F2 buttons, the program button can be set to use any function available in the setup menu settings. When the resolution is set to ‘4K Live SMPTE-2110’ in the record menu the program button marked PGM lets you switch between the camera view and any signal plugged into the 12G-SDI B connection on the rear panel. This means if you’re using the camera in a live broadcast, you can plug in the switcher’s program output and monitor it during the shoot.

3 **F1, F2, F3**
Assignable function buttons. You can assign functions to these buttons for easy access to your most commonly used functions.

4 **ON/OFF switch**
Switches the Blackmagic URSA Studio Viewfinder on and off.

5 **Bright**
Adjusts the brightness of the image on screen. Overlays on screen will show the brightness level on a scale of -100 to +100.

6 **Contrast**
Adjusts the contrast of the image on screen. Overlays on screen will show the contrast level on a scale of -100 to +100.

7 **Peaking**
Adjusts the focus peaking level for the image on screen. Overlays on screen will show the peaking level on a scale of -100 to +100. In the setup menu you can select between various styles of peaking to suit your environment. There is the option for the traditional style of focus peaking that many will be familiar with from other broadcast systems, as well as the option to use colored lines for focus. As with URSA Cine you have the option of ‘red’, ‘green’, ‘blue’, ‘black’ and ‘white’ lines which gives you flexibility to make them easily viewable when shooting in environments that have a lot of a particular color.

8 Handles

The built in handles are large and allow you to hold the Studio Viewfinder in place as you reposition the camera while shooting. They also provide protection for the screen when setting up and packing down.

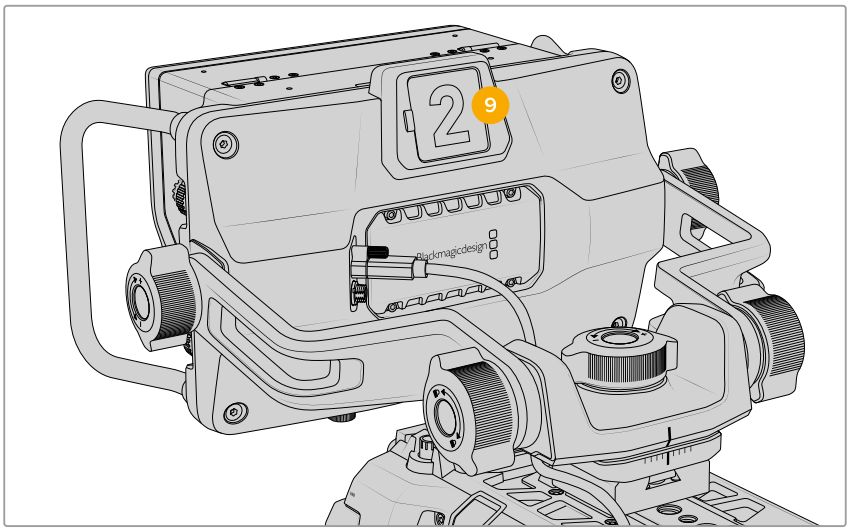

9 Tally Light

The large tally light on the rear of the studio viewfinder lets both the talent and operator know which camera is on the air, which camera is about to be on air and if they are ISO recording. The tally illuminates red for on-air, green for preview and yellow for ISO record.

As the director cuts between cameras on the ATEM switcher, tally information is sent via SDI program return if you are plugged into an SDI switcher or via NMOS over Ethernet if you are plugged into a 2110 IP switcher. This means the light is lit when the camera is being previewed to switch to, on the air or recording. In addition, URSA Cine Studio Viewfinder also includes clip-on transparent camera numbers that attach to the tally light, making it easy for talent to clearly see camera numbers from up to 20 feet away.

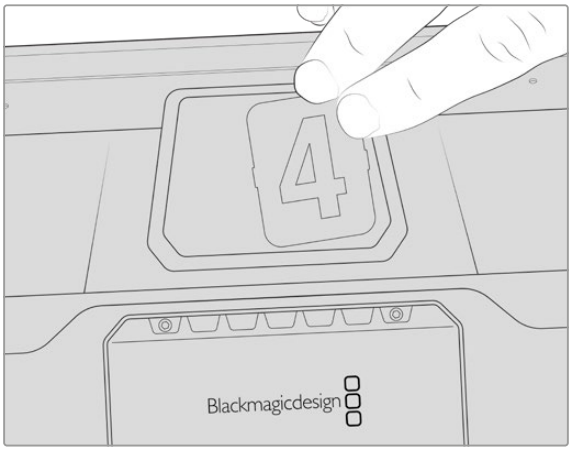

We have included editable PDF's in the software installer that allows you to edit and print out your own tally numbers to match the ones provided, and also to create your own custom tally number inserts. After installing the Blackmagic cameras software these can be found on a Mac in the Application > Blackmagic Cameras > Documents folder and on a PC in the Blackmagic Design > Documents folder.

The tally light will illuminate according to the ATEM switching operations, and when the camera is not connected to a switcher the tally light will illuminate red as a simple record tally indicator.

The URSA Cine Studio Viewfinder ships pre-calibrated but you can recalibrate at any time using the LCD white balance calibration setting on the last page of the setup menu on the viewfinder.

Updating the Internal Software

Update your URSA Cine Studio Viewfinder using the Blackmagic Camera Setup utility software.

For information on updating the internal software refer to the Blackmagic Camera Setup section in this manual.

NOTE When using your Blackmagic URSA Cine Studio Viewfinder with URSA Cine, we recommend updating your viewfinder's internal software to the latest version to ensure compatibility. The latest software can be found at the Blackmagic Design support center at www.blackmagicdesign.com/support. Refer to the 'Blackmagic Camera Setup Utility' section in this manual for more information.

Blackmagic Zoom and Focus Demands

Blackmagic Zoom Demand and Blackmagic Focus Demand are optional accessories for controlling focus and zoom when using compatible servo driven B4, EF and PL lenses.

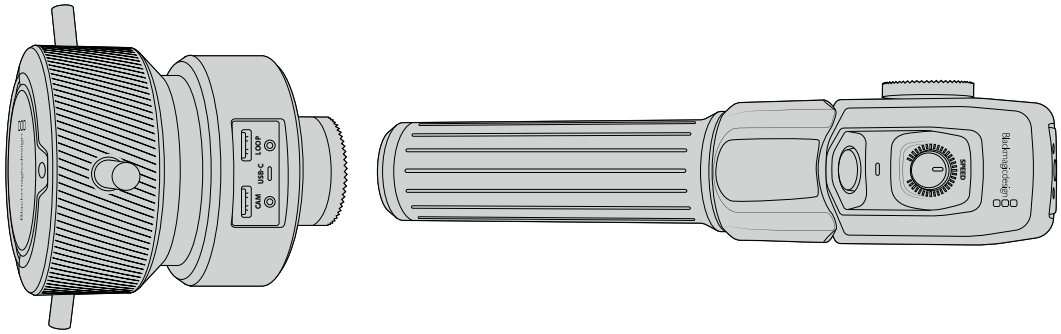

Each unit attaches to a tripod handle on your tripod or camera pedestal. This lets you control focus and zoom while simultaneously panning and tilting the camera using both hands. Additional buttons and controls let you refine the speed and sensitivity of the zoom control, engage talkback, monitor program return and more.

Attaching to Tripod Handles

Each unit attaches to a tripod handle via their mounting brackets. Attach each unit to the brackets via their rosette mounts:

To attach the demand units to their brackets, simply connect them together via their rosette mounts and secure them by tightening the fastening knob.

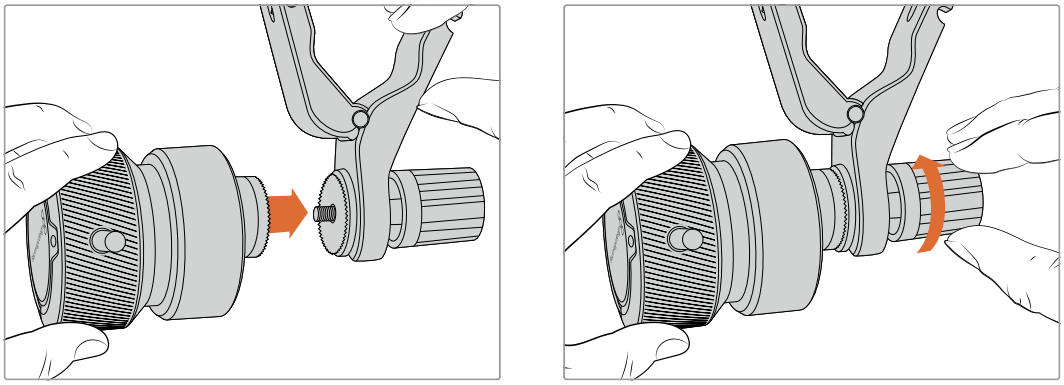

1. Place the zoom demand or focus demand against their bracket's rosette mount.
2. Tighten their fastening knob so the demand units are firmly attached to their brackets.

Now that the units are attached to the brackets, you can attach the brackets to the tripod arms. One end of each bracket contains a ‘T’ shaped latch that hinges into a slot and is then tightened.

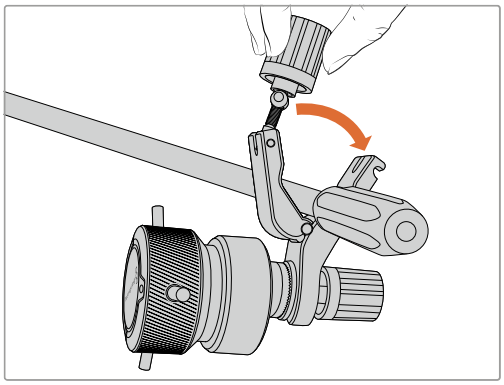

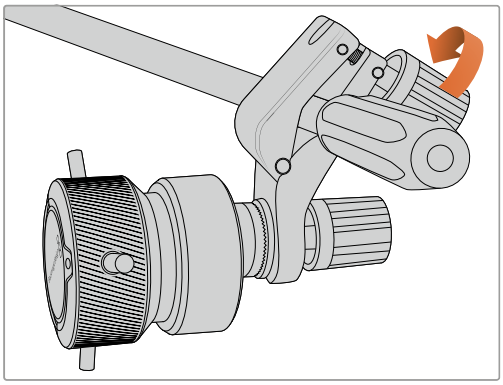

1 Loosen the latch by unscrewing the latch knob in a counterclockwise motion. This will release the ’T’ shaped latch.

2 With the latch open, place the bracket onto the tripod arm and clamp the bracket shut by closing the latch into its fastening slot. Rotate the bracket to your preferred position on the tripod arm.

3 Tighten the latch knob to secure the bracket to the tripod arm.

Connecting to Your Camera

Blackmagic Focus and Zoom Demands have two USB-C ports. This lets you use one unit individually, or both units together.

Each unit is supplied with a 1 meter long USB-C cable which is connected directly from your URSA Cine’s USB-C port to the demand unit’s ‘cam’ port.

If you are using both demand units, daisy chain them together by connecting the first unit to the second unit via USB-C.

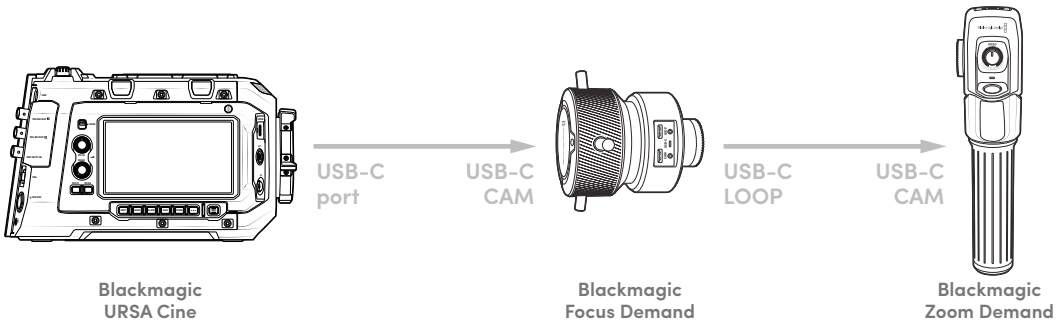

Daisy chaining allows for both units to be controlled using the USB-C port on your URSA Cine. For example, connect a USB-C cable into your camera’s USB-C port and connect the other end of the cable into the focus demand’s ‘cam’ port. With a second cable, plug the focus demand’s ‘loop’ port into the zoom demand’s ‘cam’ port.

The USB-C cable has locking screws on each end to secure the connectors to each unit, preventing accidental disconnection. You don’t have to use the locking screws, but they are helpful for setups where the units are always connected to your URSA Cine.

Using Blackmagic Focus Demand

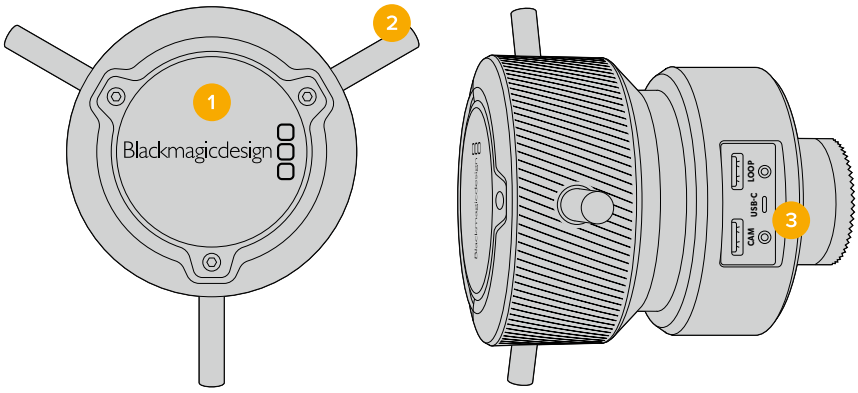

1 Control Knob

Rotate the focus wheel clockwise to focus on subjects closer to the lens, or counterclockwise to focus on subjects further away. You can change the focus direction in the menu by setting it to either ‘normal’ or ‘reverse’.

TIP If you are also using a Blackmagic Zoom Demand, press the quick zoom button to magnify the image as you focus using the focus demand.

2 Control Pins

These three pins expand the diameter of the control surface to let you make finer focus adjustments with the tip of a finger.

3 USB ports

Allows for connecting the focus demand to the camera and daisy chaining to the zoom demand. The ‘cam’ port is also used for updating the internal software via the Blackmagic Camera Setup utility.

Using Blackmagic Zoom Demand

The controls on the Zoom Demand are mappable through your URSA Cine's dashboard settings. To change the button functions, refer to the 'setup settings' chapter in the 'settings' section.

The following commands are set as default:

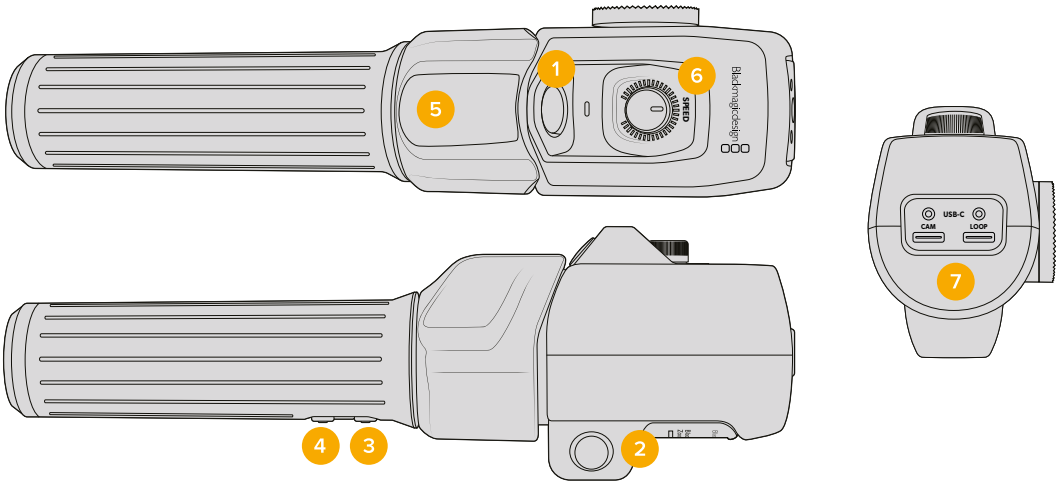

1 Zoom F1

This is the zoom function button 1. By default, it is mapped as a 'record' button.

2 Zoom F2

This is the zoom function button 2. On the other side of the controller is an identical button that performs the same function, allowing for left and right handed control. By default, it is set as a quick zoom function which instantaneously punches into the live image.

NOTE The quick zoom feature is only visible on the Blackmagic URSA Cine's LCD and will not be visible on the output video connected to a switcher or recorder.

3 Zoom F3

This is the zoom function button 3. The default action for this button is set to program return. This would normally be a switcher's program return feed, but can be any SDI signal connected to your camera's SDI input.

4 Zoom F4

This is the zoom function button 4. The default action for this button is set to push to talk. When connected to an ATEM switcher via SDI, press and hold the button to communicate with the switcher operator.

5 Thumb Rocker

The zoom demand handle provides a thumb rocker control. Push the thumb rocker left to zoom out, and right to zoom in. The direction of the zoom can be reversed using the camera's menu settings.

6 Speed Dial

Finely adjust the speed of the zoom by adjusting the speed dial at the top of the unit. You can map this dial to also control the headphone level, iris adjustment and even focus adjustment!

7 USB-C Ports

Allows for connecting the zoom demand to the camera and daisy chaining to the focus demand. The 'cam' port is also used for updating the internal software via the Blackmagic Camera Setup utility.

Pinout Tables for URSA Cine Connectors

The following pinout tables show the pin arrangements for the following connectors:

- 8 pin power input connector
- 7 pin EXT connector
- 3 Pin RS Fischer Connector
- 2 pin +12V 1.5A power output connector

The 8 pin, 7 pin and 2 pin connectors on URSA Cine are compatible with Lemo style connectors.

8 pin power input connector

External View	Pins	Signal
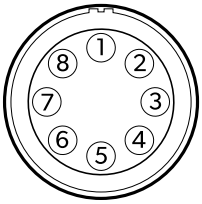 8 pin power input connector EEJ.2B.308	1	No connection
	2	Ground
	3	Ground
	4	Ground
	5	No connection
	6	Power
	7	Power
	8	Power

7 pin EXT connector

External View	Pins	Signal
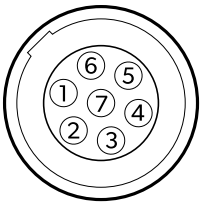 7 pin EXT connector EEG.1B.307	1	Serial 2 RX
	2	Serial 2 TX
	3	Serial 1 RX
	4	Serial 1 TX
	5	24V Output
	6	Ground
	7	Record Run/Stop

3 pin RS Fischer Connector

External View	Pins	Signal
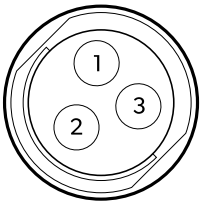 3 pin RS Fischer Connector DPB102A052	1	Ground
	2	24V Output
	3	Record Run/Stop

2 pin +12V 1.5A Power Output Connector

External View	Pins	Signal
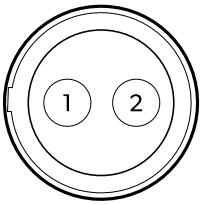 2 pin +12V 1.5A Power Output Connector EEG.0B.302	1	Ground
	2	12V Output

Using DaVinci Resolve

Shooting with your Blackmagic URSA Cine is only part of the process of creating film and television content, and just as important is the process of media backup and management as well as editing, color correction and encoding final master files. Your Blackmagic URSA Cine includes a version of DaVinci Resolve for Mac and Windows so you have a complete solution for shooting and post production!

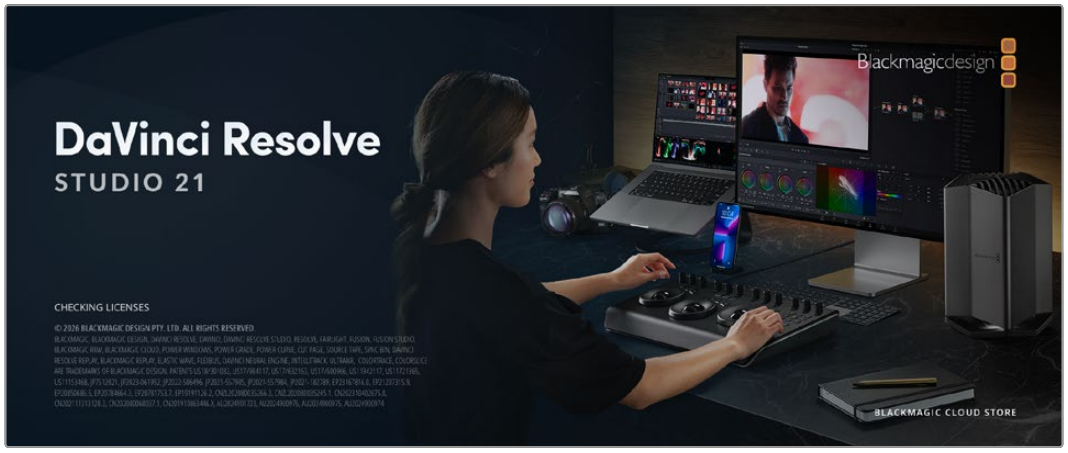

NOTE We recommend using DaVinci Resolve 21.1 or later.

After connecting your media to your computer, you can use DaVinci Resolve's 'clone' tool, in the 'media' page, to create running backups as you shoot. This is recommended as any type of media is susceptible to becoming damaged or developing a fault so creating backups means your shots will be immune to loss. Once you have used DaVinci Resolve to backup your media, you can then add your clips to the DaVinci media pool, then edit, color correct, and finish your production without ever having to leave DaVinci Resolve.

DaVinci Resolve is the same tool used on most major blockbuster movies, so it's much more than a simple NLE software tool, as it has extremely advanced technology built in for high end digital film. You get the advantage of this technology when you use DaVinci Resolve to edit and color correct your work.

Included here is information on how to get started using DaVinci Resolve with your camera files. Of course, DaVinci Resolve is extremely advanced and includes a lot more features than you immediately see when first looking at its user interface. To learn more about how to use DaVinci Resolve, please check for the DaVinci Resolve instruction manual on the Blackmagic website, where you can also find many training courses and tutorial videos.

Project Manager

Before you import your clips and start editing, you will need to set up your project using the project manager.

The project manager is the first screen you will see when launching DaVinci Resolve, but you can open the manager at any time by clicking on the ‘home’ icon at the bottom right of the user interface. This is helpful when you want to open previous projects and create new ones.

To create a new project, click on ‘new project’ at the bottom of the window and give your project a name. Click ‘create’.

Using the ‘cut’ page, you can start working on your edit immediately.

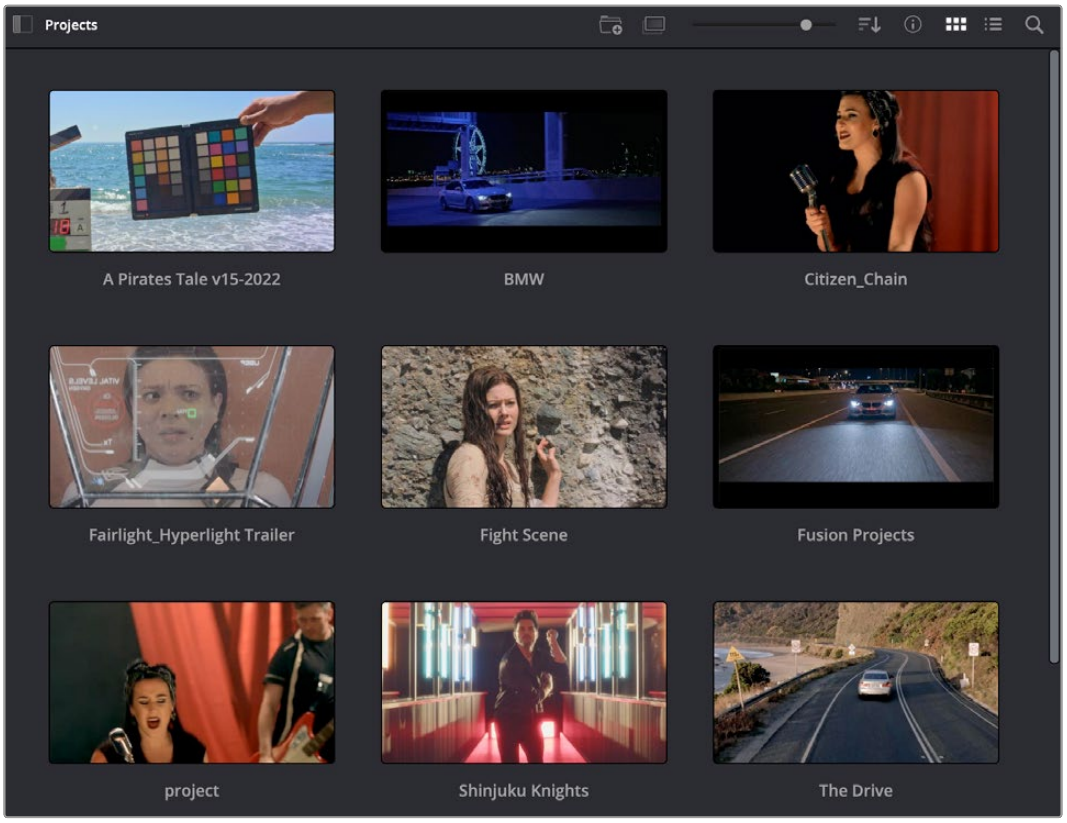

The project manager shows all projects belonging to the current user

For more information about the Project Manager, refer to the DaVinci Resolve manual which is available to download on the Blackmagic Design website support page.

Editing with the Cut Page

The ‘cut’ page gives you a fast, dynamic editing workflow that lets you quickly assemble, trim and edit clips efficiently.

Two active timelines let you work with your entire edit plus a detailed area simultaneously. This means you can drop clips anywhere on a large timeline, then refine your edit in a detailed timeline within the same workspace. Using this workflow, you can edit on a laptop without needing to zoom in and out and scroll as you work, which can be an enormous time saver.

The Cut Page Layout

When you open the cut page, you will see the media pool, viewer window and timeline. These three primary windows give you complete control over your edit.

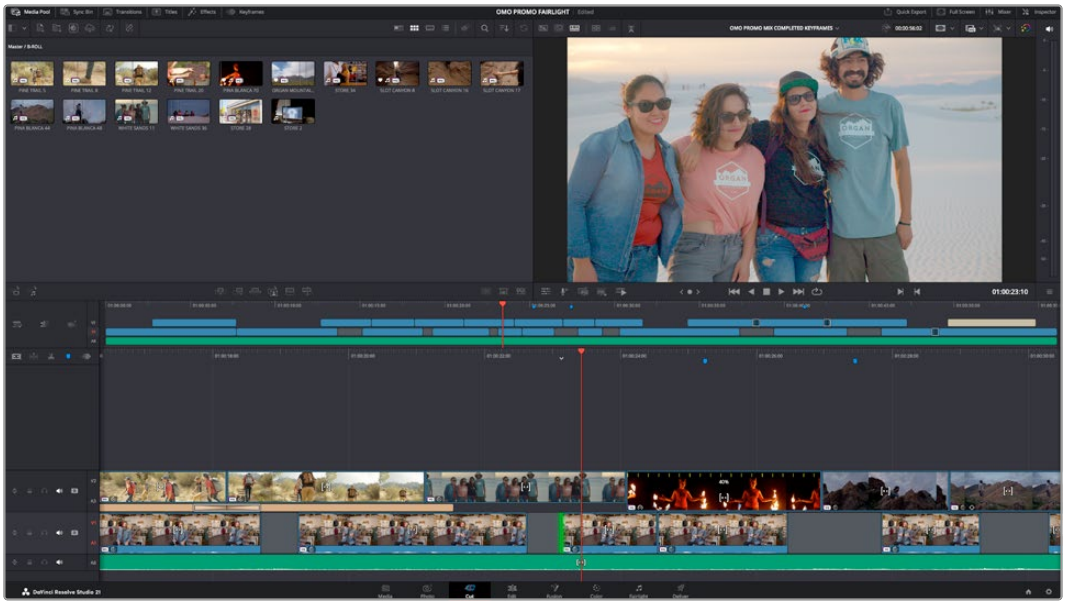

The Cut page default workspace, with the Media Pool in icon view

For more information on the Cut page, see the ‘the cut page’ chapter in the DaVinci Resolve manual.

Media Tabs

At the top left corner of the user interface you will see six tabs.

Click on these tabs to open the media toolsets you will use when creating your edit. For example, the first tab is the media pool and you can see it is already selected. The other tabs are for the sync bin, keyframe editor, media transitions, titles and effects.

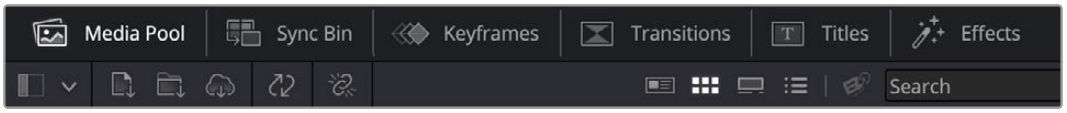

- **Media Pool:** The media pool contains all your clips, folders and files you imported using the media page. You can also import files directly from the cut page, so you don’t have to go back to the media page if you want to import a new clip.
- **Sync Bin:** This powerful feature automatically syncs all your clips via timecode, date and time so you can choose angles from all cameras on a multi camera project.
- **Keyframes:** When using automation, for example animating titles and speed ramps, you can edit the animation’s keyframes using the keyframe editor.
- **Transitions:** If you click on the neighboring transitions tab, you will see all the video and audio transitions you can use in your edit. These include common transitions such as cross dissolves and motion wipes.
- **Titles:** Next to transitions is the ‘titles’ tab. Here you can select the title type you want to use. For example a scroll, standard text or lower thirds title. There are also a list of Fusion templates you can use for more animated dynamic titles which can be customized in DaVinci Resolve’s ‘Fusion’ page.

- **Effects:** The fifth tab is the ‘effects’ tab. This provides all the different filters and effects you can use to bring more life to your edit, for example customizable blurs, glows and lens effects. There are many powerful effects to choose from and you can find them quickly using the search tool.

TIP Use the search tool near the media tab icons to find the exact items you are looking for. For example, if you have the transitions tab selected, type “dissolve” in the search tool and only dissolve transition types will be shown in the viewer, making it quicker for you to find the dissolve transition you want.

Viewer Tabs

Near the top left corner of the viewer window you will see the viewer mode buttons.



The viewer mode buttons

These buttons control which viewer is currently being used, including ‘source clip’, ‘source tape’, and ‘timeline’. These viewer modes give you an enormous amount of control when selecting clips for your edit and it’s worth spending a moment to look at how they work.

	**Source Clip**	The source clip viewer displays a single clip from the media pool and you can set in and out points along the entire length of the viewer timeline. This gives you greater control. Select a source clip to view by double clicking on a clip in the media pool, or dragging it into the viewer.
	**Source Tape**	Source tape lets you view all the source clips in the media pool. This powerful feature is helpful if you want to quickly search through all your clips to find a specific event. As you scrub the playhead over the clips, you will see their thumbnails selected in the media pool. This means once you have found the clip you want to edit, you can click on the source clip tab and its corresponding source clip will appear in the viewer automatically. The source tape viewer really lets you take advantage of non-linear editing, giving you the freedom to work on your edit, find shots quickly, try new ideas and stay in the moment.
	**Timeline**	The timeline viewer lets you view the edit timeline so you can play back your project and refine your edits.

Importing Clips to the Media Pool

Now you can start importing media into your project. You can do this in the media pool window of the cut page using the import tools at the top.



Select one of the import options to add media to your project

	Import Media	The import media option will import individual media files selected from your storage location.
	Import Media Folder	To import a folder from your media storage, select the import folder option. When importing a folder, DaVinci Resolve will keep the file structure, treating each folder as a separate bin so you can navigate between bins to find your videos and other media files.

To import media:

1. Click on the 'import media' or 'import media folder' icon.
2. Navigate to your media storage for the media you want to import.
3. Select the file or folder and click 'open'.

Once you've added media to your project, it is a good time to save your changes. DaVinci Resolve features a fast, on the go autosave called 'live save'. Once you save you project once, 'live save' will save further changes as you make them, removing the risk of losing your work.

For more information on 'live save' and other auto save functions, refer to the DaVinci Resolve Manual.

Adding Clips to the Timeline

Now that you are familiar with the media tabs and viewer mode buttons, you can open the media pool and quickly start adding clips to your timeline.

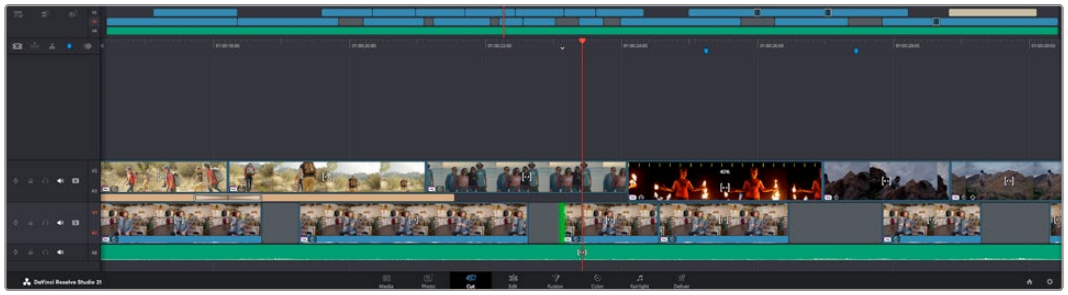

The timeline of the cut page, comprising the upper timeline and the zoomed in timeline below

The timeline is where you will build your edit and is like a board with tracks you can attach clips to, move them around and trim their edits. Tracks let you layer clips over others which gives you more flexibility to try different edits and build transitions and effects. For example, you can try an edit with a clip on one track without affecting other clips on tracks below it.

There are different ways to add clips to the timeline, such as smart insert, append, place on top and more.

NOTE If you are editing clips using a vertical aspect ratio, you can easily set your timeline to vertical by clicking on the ‘timeline resolution’ quick menu and selecting ‘portrait 1080x1920’.

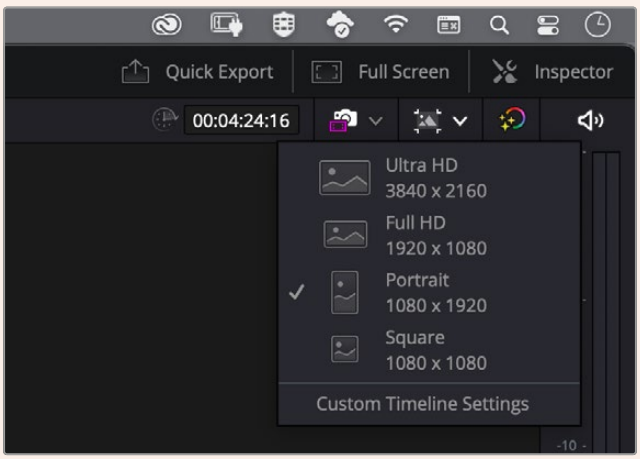

Set the timeline for vertical aspect ratios using the timeline resolution quick menu

Appending Clips

When selecting takes and assembling an edit, you will likely want to add these shots to your timeline one after the other. The append tool is perfect for this task and will get you editing very fast.

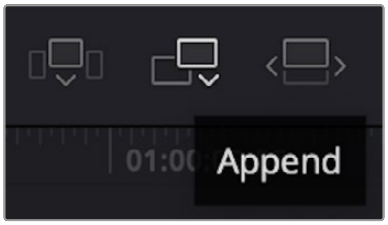

Click on the append icon to quickly add clips to the end of the last clip

To append a clip:

1. Double click on a clip in the media pool to open it in the viewer.
2. Using the scratch trim tool, drag the in and out points to select the precise duration of your shot. You can also press the ‘i’ and ‘o’ keyboard shortcuts to set in and out points.

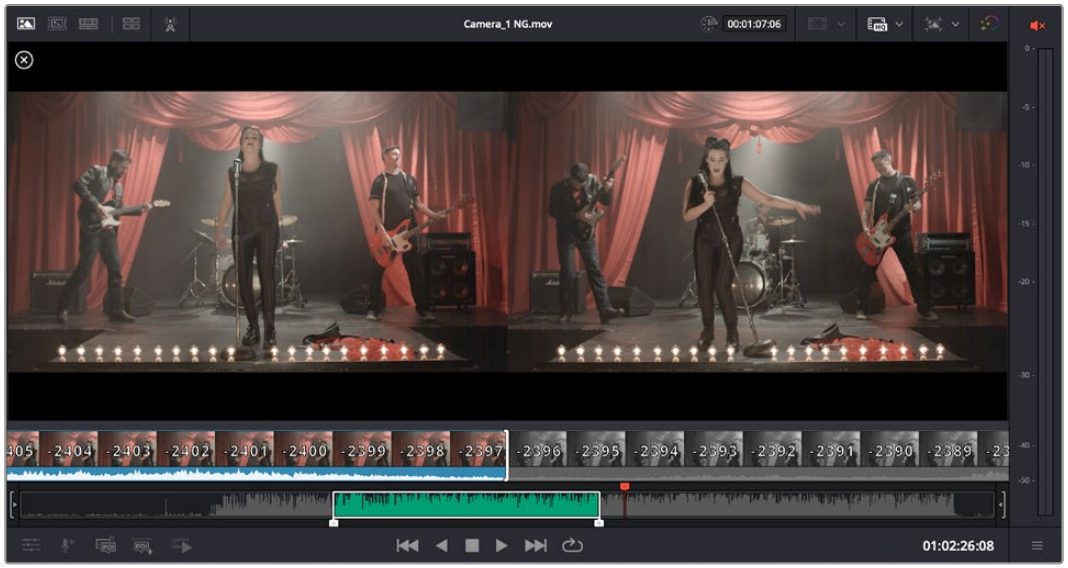

3 Now click the ‘append’ icon underneath the media pool.

Your first clip will be placed at the head of the timeline.

Repeat steps 1 to 3 to keep adding more clips and they will automatically append, ensuring there are no gaps in the timeline.

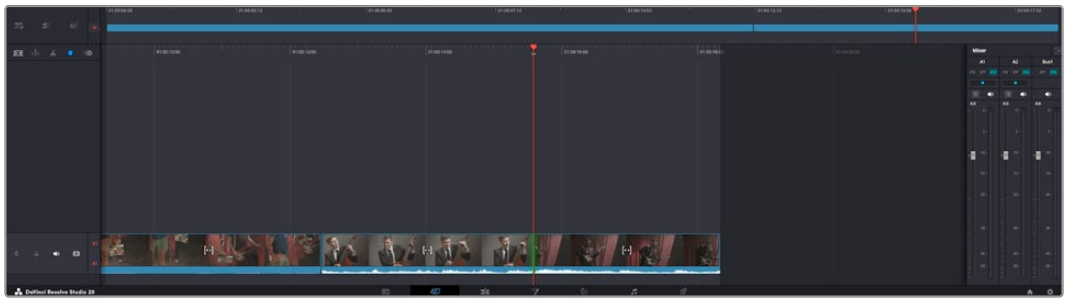

Appending clips ensures there are no gaps between them on the timeline

TIP You can speed up the process further by assigning a keyboard shortcut to the ‘append’ icon. For example, if you assign the ‘P’ key, you can set your in and out points using ‘I’ and ‘O’ then press ‘P’ to append the clip. Refer to the DaVinci Resolve manual for information on how to assign shortcut keys.

Video Only and Audio Only Edits

Normally, any edit function in the Cut page inserts both the audio and video into the timeline. However, there are several scenarios where you would only want either the audio or the video to be used instead.

To add only the video of a clip, click the video only icon above the timeline, it will illuminate red when enabled.



Now only the video portion will be added when clips are appended to the timeline.

You can also use the video only or audio only setting to limit transitions to only the video or audio of a cut.

To add a transition to audio only:

1. Click the audio only icon to enable it.
2. Move the playhead to near the cut point.
3. Click the ‘dissolve’ icon above the timeline. The dissolve will be applied to the audio tracks only.

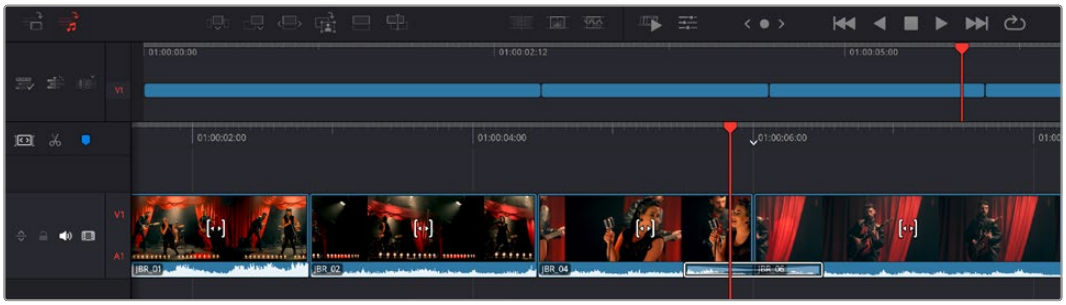

Trimming Clips on the Timeline

With clips added to the timeline, you have complete control to move them around and trim edits.

To trim an edit, hover the mouse over the start or end of a clip, then click and drag it left or right. For example, drag the end of the clip left or right to decrease or increase its duration. You might notice that all clips after that edit will shift on the timeline to accommodate the new adjustment. This is one way the ‘cut’ page helps to save you time.

You can even pick the clip up and drop it on a new video track in the large timeline without having to zoom in or out. This speeds up the edit process because it minimizes time navigating a long timeline.

Toolbar

The toolbar to the left of the upper timeline contains action and option menus for the timeline.

	**Timeline Options**	Timeline options let you set how the clips and timeline are displayed, such as displaying clip names and setting the playhead behavior.
	**Timeline Actions**	Timeline actions can be used to add new tracks or make modifications to the timeline.
	**Edit Actions**	Edit actions are used to add new clips on the timeline or make modifications and include trimming the start and end to playhead along with resyncing multicam clips.

Audio Trim View

Audio trim view helps you make accurate audio edits by expanding the audio waveform in the timeline. This is useful if you're editing a dialogue scene or a music clip and makes it easy to find an edit point between words or beats.

To use Trim to Audio view:

1 Click the timeline options icon and check 'trim to audio'.

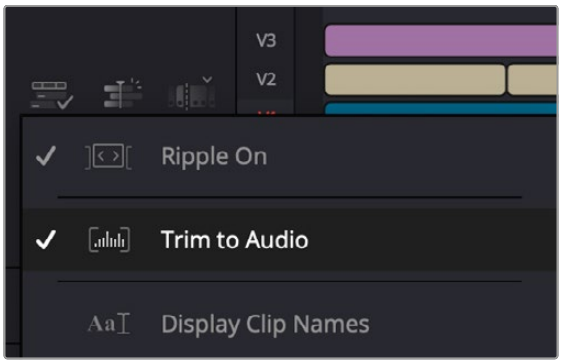

Check 'trim to audio'

2 Now when you trim an edit you will see an expanded waveform in the timeline. When you finish trimming, the clips in the timeline will return to their normal size.

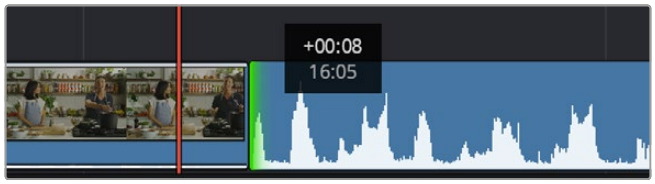

Trim to audio view expands the audio waveform in the timeline.

After you have finished editing clips using the 'cut' page, you might want to add a title. The next section will show you how.

Adding Titles

Placing a title on your timeline is easy and you have many options.

To see the different types of titles you can use, click on the ‘titles’ media tab at the top left corner of the user interface. In the selection window you will see all the different title generators you can use displayed as thumbnails, from lower thirds, scrolls, to a standard text title. You can even add any of the Fusion titles which are animated titles that you can customize.

Previewing Titles

Before you add a title to your timeline you can preview it from the ‘titles’ selection window. This lets you quickly scan through all the available options before making a choice.

To preview a title:

1. Click the option menu to the top right-hand side of the titles panel and check ‘hover scrub preview’.

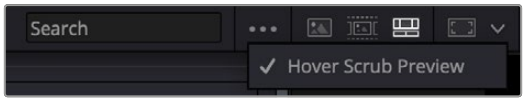

Enable Hover Scrub Preview from the option menu.

2. In the ‘titles’ selection window, hover your mouse pointer over a thumbnail to preview a title in the viewer. If you are previewing an animated or Fusion title move the pointer across the title’s thumbnail from left to right to see the animation.



Hover over a title’s thumbnail to preview it in the viewer.

Once you’ve chosen a title you can add it to your timeline.

To add a standard title:

1. Click on the title and drag it onto the timeline. It doesn’t matter which timeline, but for greater accuracy we recommend using the detailed timeline. The title will automatically create a new video track for the title and will snap to the playhead.
2. Release the mouse and the title will appear on the new track. You can now move it or change its duration like you would another video clip.
3. To edit the title, click on the new title clip and then click the tools icon underneath the clip viewer.

   You will now see a row of tools you can use to modify the title clip. For example transform, crop, dynamic zoom and more.
4. Now click the inspector tab.

This will open the inspector window where you can type in the title you want and edit the text settings, for example tracking, line spacing, font type, color and more.

You have a lot of options to customize the title exactly how you want it. We recommend playing with all the different settings to see how they can change the appearance and shape of your title.

TIP You can also use the hover scrub function to preview effects, transitions, generators and filters on the 'cut' and 'edit' pages.

Working with Blackmagic RAW Files

Blackmagic RAW clips give you maximum flexibility in post production. This lets you make adjustments to clips, such as white balance and ISO settings, as if you were changing the original camera settings. Working with Blackmagic RAW also retains more tonal information within shadows and highlights, which is useful for recovering details, for example in blown out skies and dark areas of the picture.

It's worth shooting in Blackmagic RAW if you are after the highest possible quality, or for shots where there is an extreme variance between highlights and shadows and you may need to push and pull those regions as much as possible in the grade.

The speed and small file size of Blackmagic RAW means you don't need to make proxy files and playback is just like a standard video clip. This section of the manual describes the features of Blackmagic RAW and how to use Blackmagic RAW files in your DaVinci Resolve workflow.

TIP It is a good practice to adjust the Blackmagic RAW settings for your clips on the 'color' page before you start color grading.

Clip Settings for Blackmagic RAW

When you first import Blackmagic RAW files, DaVinci Resolve will decode the camera data contained in the files using the ISO, white balance and tint settings used at the time of shooting. If you're happy with the look of these settings, you can start editing right away.

The great thing about shooting Blackmagic RAW is that you're not tied to these settings at all! The breadth of available post processing options when working with Blackmagic RAW files means that you'll develop your own workflow over time. Experimenting with the 'clip' settings for each clip in the 'camera raw' tab will show you just how powerful and flexible working with Blackmagic RAW can be.

The 'color science' menu lets you choose whether to interpret your footage with generation 4 color science or generation 5 color science. URSA Cine uses Blackmagic Design generation 5 color science. Files made on different cameras with generation 4 color science can be reinterpreted with generation 5 color science to match your shots from URSA Cine. Alternatively, if you are shooting mainly with cameras that create Blackmagic RAW files with generation 4 color science, you can mix in clips shot on URSA Cine with generation 5 color science by reverting them to generation 4 color science. This makes it easy to match shots filmed on cameras using different generations of Blackmagic color science.



In the ‘camera raw’ tab, select ‘clip’ from the ‘decode using’ menu to make adjustments to your clip’s Blackmagic RAW settings

Changing Blackmagic RAW Settings

Once you have set DaVinci Resolve to enable clip settings for Blackmagic RAW, the clip settings and gamma controls are now adjustable. Adjusting these settings to optimize your clips can bring them close to a full primaries grade. This is especially powerful when using DaVinci Resolve’s scopes which can help you neutralize and balance the clips ready for applying a look.

The following information contains descriptions for the clip and gamma controls.

ISO

The ISO value can be changed by increasing or decreasing this setting. This setting is helpful if you need to set the clip to a brighter or darker starting point for optimization.

Highlight Recovery

Check the box to reconstruct highlight information in clipped channels using information from non-clipped channels.

Gamut Compression

Check the box to automatically maintain safe gamut levels.

Color Temp

Adjust the color temperature to warm or cool the image. This can be used to help neutralize the color balance in each image.

Tint

Adjusting this setting will add green or magenta into the image to help balance the color.

Exposure

Use this setting to refine the overall brightness of the image.

Saturation

Saturation controls default at 1 and range from 0 for the minimum saturation to 4 for maximum saturation.

Contrast

Defaulting at 1.0, drag the slider to the left for the least amount of contrast at 0 or to the right to increase the contrast up to 2.

Midpoint

In Blackmagic Design Film, your middle gray value defaults to 0.38, or 38.4%. Drag the slider to the left to lower your midpoint or to the right to raise it to 100. When contrast is adjusted away from the default setting, you can modify your highlight and shadow rolloff.

Highlight Rolloff

Adjust the highlights by dragging the slider to the left to lower the value to 0, or to the right to increase the highlights to 2. The default value is 1.

Shadow Rolloff

Drag the slider to the left to lower your shadows to 0 or to the right to raise your shadows to 2.

White Level

Adjust the white point of the gamma curve by dragging the slider from the highest value of 2 to the lowest value of 0. The default value is 1.

Black Level

Raise the black point of the custom gamma curve by dragging the slider to the right from the lowest value of -1 to a maximum of 1. The default value is 0.

Use Video Black Level

Check the box to set your black levels to video.

Export Frame

Clicking the ‘export frame’ button lets you export a single frame from your Blackmagic RAW clip.

Update Sidecar

Click this button to update the Blackmagic RAW sidecar file for the current clip.

Any changes you have made to your Blackmagic RAW clips will be identified by the gamma setting changing to Blackmagic Design Custom.

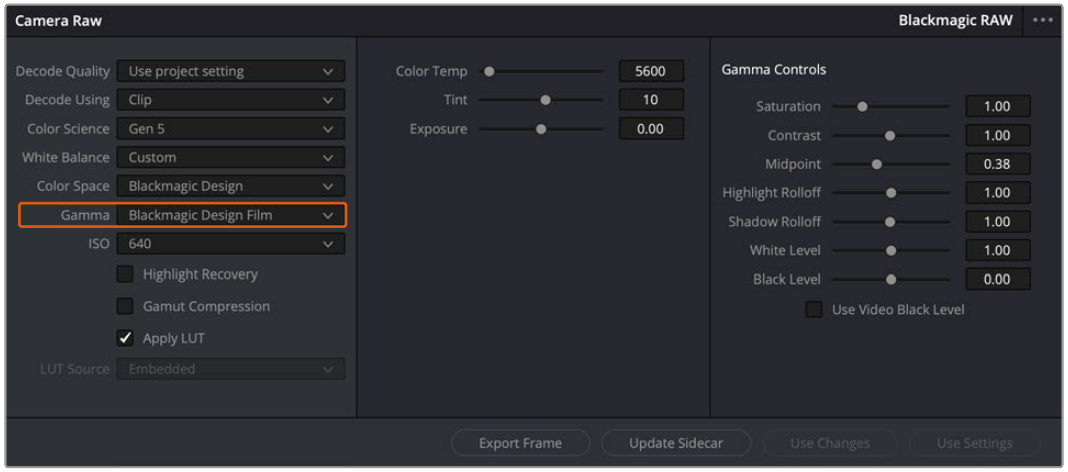

If you want to revert your clip to one of the default gamma options available, simply select it from the gamma menu

TIP Gamma controls are disabled for footage shot with the ‘video’ dynamic range, but you have not lost your Blackmagic RAW data. Simply select Blackmagic Design Film or Blackmagic Design Extended Video from the dropdown gamma menu and make your adjustments.

To save your Blackmagic RAW changes:

1 Adjust the gamma controls for your Blackmagic RAW clip.

2 Click the ‘update sidecar’ button.

A ‘sidecar’ file will now be created in the same folder as your .braw file. When another user imports the Blackmagic RAW files, the sidecar files will automatically be read by DaVinci Resolve. If you make additional adjustments, press ‘update sidecar’ again.

TIP To remove your sidecar file, you can simply delete it from its location on your media drive.

Project Settings for Blackmagic RAW

If you need to make a setting change that is common to all the clips, for example a global change to the white balance or ISO setting, you can set the clips to use the project ‘camera raw’ settings and make global changes from there.

To set project settings for Blackmagic RAW:

1 Enter the project settings menu by clicking ‘file,’ and selecting ‘project settings.’

2 In the ‘camera RAW’ tab, you’ll see a menu next to RAW profile. Click on the arrow to select Blackmagic RAW from the list.

3 Select ‘project’ in the ‘decode using’ menu.

4 Select a color science option from the menu.

5 Set the white balance to ‘custom’.

6 Select ‘Blackmagic Design Custom’ from the gamma menu. Set the color space to ‘Blackmagic Design’.

7 Choose your resolution from the ‘decode quality’ menu. A lower resolution will give you better playback on limited systems. You also have the flexibility to change to full resolution later on before delivery for the highest quality output.

Now you can adjust the camera settings for your clips such as saturation, contrast and midpoint. This will affect all clips in your project that are set to decode using ‘project’.

Color Correcting your Clips with the Color Page

Now with your clips on the timeline and titles added, you can start color correcting using the ‘color’ page. The color page is extremely powerful and will define the overall look of your film, but for this example a good place to start is to neutralize all your clips so they are consistent. You can also return to the ‘cut’ or ‘edit’ page at any time if you want to make changes to your edit.

The color page lets you adjust the look of your edit and in many ways color correction is an art form in itself. You are really adding emotion to your work when you add color correction. It’s an incredibly creative part of the workflow and very satisfying when you learn these skills and can see your work come alive! This is usually the first step and is referred to as primary color correction, or adjusting the primaries. After primary color correction is done, you can then make secondary color correction adjustments which is where you can make extremely precise color adjustments of specific objects in your images. That is a lot of fun, but is normally done after primaries because it helps make the process more efficient and you will get a better result!

First click on the ‘color’ tab to open the color page.

You’ll see the camera raw settings, color wheels, curves palettes and general color correction tools as well as the preview and nodes window. Don’t feel overwhelmed by the vast array of features in front of you, they are all there to help you get the most amazing looking pictures. This getting started section will show the basics, but for more detailed information refer to the relevant sections in the manual. They will show you exactly what all the tools are for and how to use them in easy to follow steps. You’ll learn the same techniques the professionals use in high end color correction facilities.

Generally, the first step for primary color correction is to optimize the levels for shadows, mid tones and highlights in your clips. In other words adjust the ‘lift’, ‘gamma’ and ‘gain’ settings. This will help get your pictures looking their brightest and best with a clean, balanced starting point from where you can begin grading the ‘look’ of your film. To optimize the levels, it’s helpful to use the scopes.

Using Scopes

Most colorists make creative color choices by focusing on the emotion and the look they want their program to have and then simply work using the monitor to achieve that look. You can look at everyday objects and how different types of light interact with them to generate ideas on what you can do with your images and a little practice.

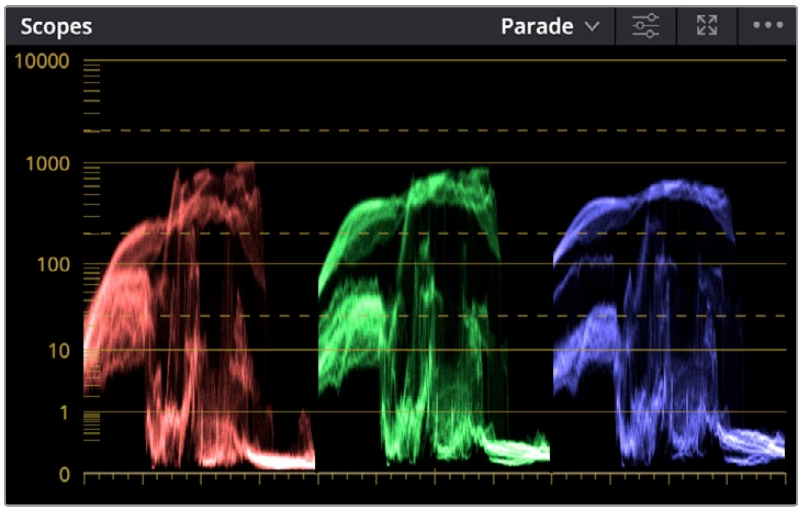

The parade scope helps you optimize highlights, mid tones and shadows

Another way to color grade is to use the built in scopes to help you balance shots. You can open a single video scope by clicking the ‘scope’ button, which is the second from the right on the palette toolbar. You can choose to display a waveform, parade, vectorscope, histogram or CIE chromaticity scope. Using these scopes you can monitor your tonal balance, check the levels of your video to avoid crushing your blacks and clipping the highlights, plus monitor any color cast in your clips.

The ‘color wheels’ palette contains the ‘lift’, ‘gamma’ and ‘gain’ controls which will generally constitute your first adjustment. If you’ve previously had experience with color correction, these should resemble controls you’ve seen in other applications for doing color and contrast adjustments.



The ‘lift, ‘gamma’, ‘gain’ and ‘offset’ color wheels give you total control over the color and tonal balance of your clips. To make a uniform adjustment to all colors for each tonal region, drag the dial underneath the color wheels back and forth

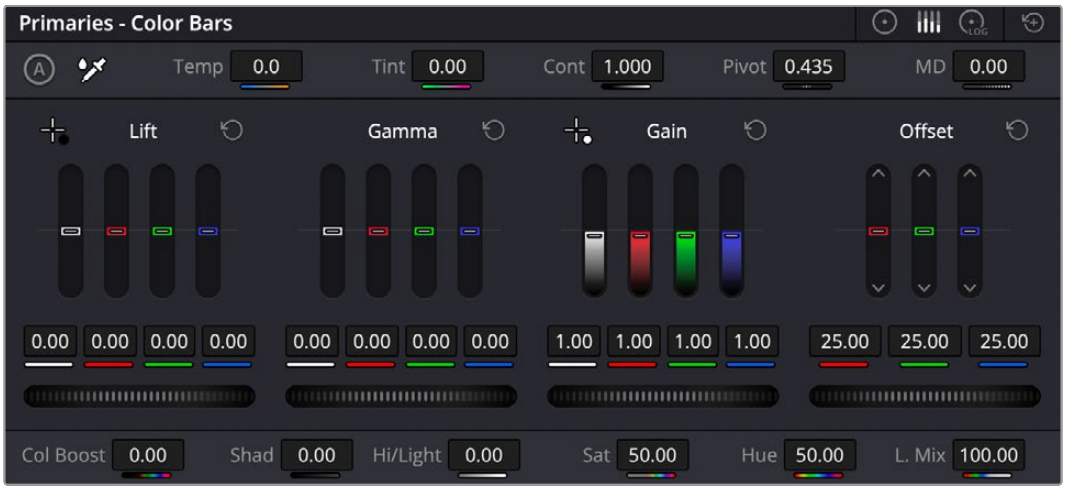

The primaries bars make color adjustments easier when using a mouse.

For more accurate control of each color using a mouse, you can change the color wheels to ‘primaries bars’ which let you adjust each color and luminance channel for the lift, gamma and gain controls separately. Simply select ‘primaries bars’ from the dropdown menu near the top right of the color wheels.

- **Adjusting the ‘lift’:** With your clip selected on the color timeline, click on the ‘lift’ dial underneath the first color wheel. Slide it back and forth and watch how it affects your image. You’ll see the brightness of the dark regions of your picture increase and decrease.

  Set it to where you want the dark areas to look their best. If you decrease the lift too much, you’ll lose details in the blacks and you can use the parade scope to help avoid this. The optimal position for blacks on the waveform is just above the bottom line of the parade scope.

- **Adjusting the ‘gain’:** Click on the ‘gain’ dial and slide it back and forth. This adjusts the highlights which are the brightest areas of your clip. The highlights are shown on the top section of the waveform on the parade scope. For a brightly lit shot, these are best positioned just below the top line of the waveform scope. If the highlights rise above the top line of the waveform scope, they will clip and you will lose details in the brightest regions of your image.

- **Adjusting the 'gamma':** Click on the 'gamma' dial underneath the color wheel and slide it back and forth. As you increase the gamma you'll see the brightness of the image increase. Notice the middle section of the waveform will also move as you adjust the gamma. This represents the mid tones of your clip. The optimal position for mid tones generally falls between 50 to 70% on the waveform scope. However, this can be subjective based on the look you are creating and the lighting conditions in the clip.

You can also use the curves palette to make primary color corrections. Simply click to create control points on the diagonal line inside the curve graph, and drag them up or down to adjust the master RGB contrast at different areas of image tonality. The optimum points to adjust are the bottom third, mid, and top third of the curve line.

There are many more ways of doing primary color correction in DaVinci Resolve.



The curves palette is another tool you can use to make primary color corrections, or enhance specific areas of your clip when using a power window

Secondary Color Correction

If you want to adjust a specific part of your image then you need to use secondary corrections. The adjustments you have been doing up until now using the lift, gamma and gain adjustments affect the whole image at the same time and so they are called primary color corrections.

However, if you need to adjust specific parts of your image, say for example you wanted to improve the color in the grass in a scene, or you wanted to deepen the blue in a sky, then you can use secondary corrections. Secondary color corrections are where you select a part of the image and then adjust only that part. With nodes, you can stack multiple secondary corrections so you can keep working parts of your image until everything is just right! You can even use windows and tracking to allow the selections to follow movement in your images.

Qualifying a Color

Often you'll find a specific color in your clip can be enhanced, for example grass by the side of a road, or the blue in a sky, or you may need to adjust color on a specific object to focus the audience's attention on it. You can easily do this by using the HSL qualifier tool.

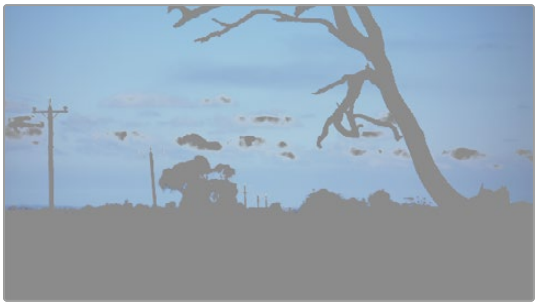

Using the HSL qualifier to select colors in your image is helpful when you want to make areas of your image ‘pop’, to add contrast, or to help draw the audience’s attention to certain areas of your shot

To qualify a color:

1. Add a new serial node.
2. Open the ‘qualifier’ palette and make sure the ‘selection range’ picker tool is selected.
3. Click on the color in your clip you want to affect.
4. Usually you’ll need to make some adjustments to soften the edges of your selection and limit the region to only the desired color. Click on the ‘highlight’ button above the viewer to see your selection.
5. Adjust the ‘width’ control in the ‘hue’ window to broaden or narrow your selection.

Experiment with the high, low and softness controls to see how to refine your selection. Now you can make corrections to your selected color using the color wheels or custom curves.

Sometimes your selection can spill into areas of the shot you don’t want to affect. You can easily mask out the unwanted areas using a power window. Simply create a new window and shape it to select only the area of color you want. If your selected color moves in the shot, you can use the tracking feature to track your power window.

Adding a Power Window

Power windows are an extremely effective secondary color correction tool that can be used to isolate specific regions of your clips. These regions don’t have to be static, but can be tracked to move with a camera pan, tilt or rotation, plus the movement of the region itself.

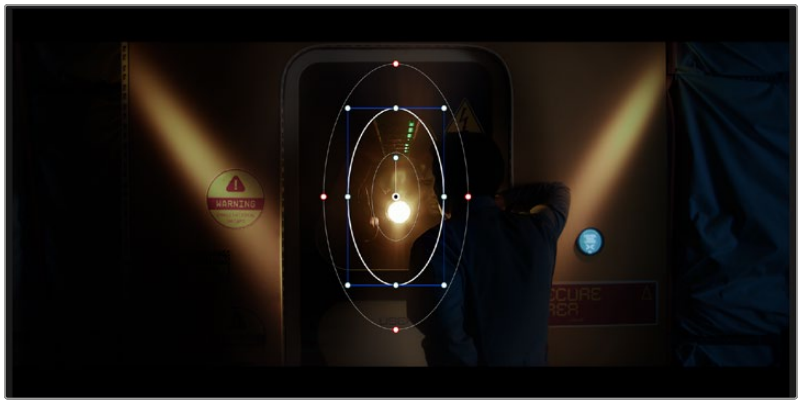

Use power windows to mask out areas you don’t want to be affected by the HSL qualifier secondary adjustments

For example, you can track a window on a person in order to make color and contrast changes just to that person without affecting his or her surroundings. By making corrections like this you can influence the audience's attention on areas you want them to notice.

To add a power window to your clip:

1. Add a new serial node.
2. Open the 'window' palette and select a window shape by clicking on a shape icon. Your selected window shape will appear on the node.
3. Resize the shape by clicking and dragging the blue points around the shape. The red points adjust the edge softness. You can position the shape by clicking the center point and moving it to the area you want to isolate. Rotate the window using the point connected to the center.

Now you can make color corrections to your image in just the area you want.

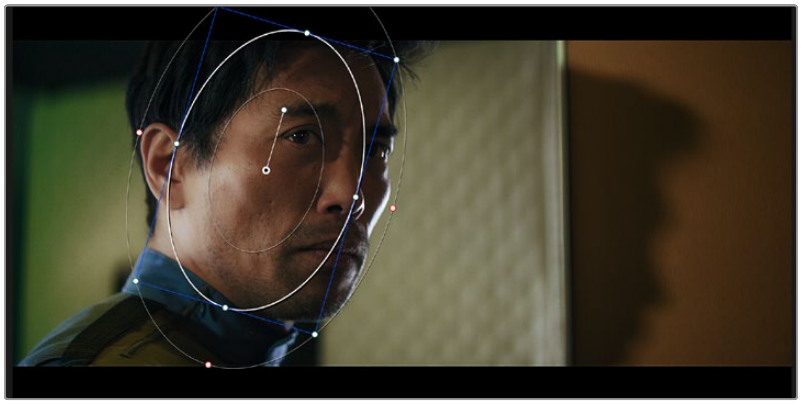

Power windows let you make secondary corrections to specific parts of your image

Tracking a Window

The camera, object or area in your shot may be moving, so to make sure your window stays on your selected object or area, you can use DaVinci Resolve's powerful tracking feature. The tracker analyzes the pan, tilt, zoom and rotation of the camera or object in your clip so you can match your windows to that movement. If this isn't done, your correction can move off the selected target and call attention to itself, which you probably don't want.

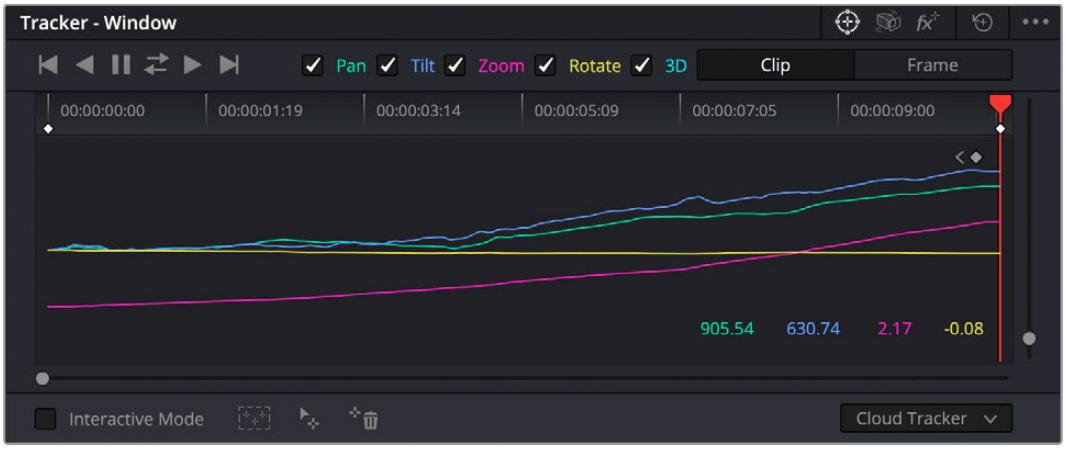

You can track objects or areas in your clip using the tracker feature so power windows can follow the action

To track a window to a moving object:

1. Create a new serial node and add a power window.
2. Go to the start of your clip and position and size the window to highlight just the object or area you want.
3. Open the ‘tracker’ palette. Select the pan, tilt, zoom, rotate, and perspective 3D settings appropriate for the movement in your clip by checking or unchecking the relevant ‘analyze’ checkboxes.
4. Click on the ‘forward’ arrow to the left of the checkboxes. DaVinci Resolve will now apply a cluster of tracking points on your clip and then step through the frames to analyze the movement. When the tracking is done, your power window will follow the path of the movement in your clip.

Most of the time automatic tracking is successful, but scenes can be complex and sometimes an object can pass in front of your selected area, interrupting or affecting your track. This can be solved manually using the keyframe editor. Refer to the DaVinci Resolve manual to find out more.

Using Plugins

While making secondary color corrections you can also add Resolve FX or Open FX plugins to create fast, interesting looks and effects using the ‘color’ page, or imaginative transitions and effects on your clips on the ‘cut’ and ‘edit’ pages. Resolve FX are installed with DaVinci Resolve, OFX plugins can be purchased and downloaded from third party suppliers.

After installing a set of OFX plugins, you can access them or Resolve FX plugins on the color page by opening the Open FX inspector to the right of the ‘node editor’. Once you create a new serial node, simply click the ‘Open FX’ button to open the FX library and drag and drop a plugin onto the new node. If the plugin has editable settings, you can adjust these in the adjoining ‘settings’ panel.



OFX plugins are a quick and easy way to create an imaginative and interesting look

In the ‘edit’ page you can add plugin filters, generators and transitions to clips by opening the ‘Open FX’ panel in the ‘effects library’ and dragging your selected plugin onto the video clip or track above your clip on the timeline depending on the plugin requirements.

Mixing Your Audio

Mixing Audio in the Edit Page

Once you have edited and color corrected your project, you can begin to mix your audio. DaVinci Resolve has a helpful set of features for editing, mixing and mastering audio for your project directly in the ‘edit’ page. For projects requiring more advanced audio tools, the Fairlight page provides you with a full audio post production environment. If you are already familiar with the edit page and want to move straight to Fairlight, skip this section and move onto the next.

Adding Audio Tracks

If you are working in the edit page and want to mix a basic sound edit with lots of sound effects and music, you can easily add more audio tracks when you need them. This can be helpful when building your sound, and separating your audio elements into individual tracks, for example, dialogue, sound effects and music.

To Add an Audio Track to the Edit Page

Right click next to the name of any audio track on your timeline and select ‘add track’ and choose from the options, including ‘mono’, ‘stereo’, and ‘5.1’. This will add the track to the bottom of the track list. Alternatively select ‘add tracks’ and select the position you would like the new track or multiple tracks placed.

Your new audio track will appear on the timeline.

> **TIP** If you wish to change the type of track after creating it, right click next to the name of the track and select ‘change track type to’ and select the type of audio track you want, such as stereo, mono or 5.1.

Adjusting Audio Levels in the Timeline

Each clip of audio in the timeline has a volume overlay that lets you set that clip’s level by simply dragging it up or down with the pointer. This overlay corresponds to the Volume parameter in the Inspector.

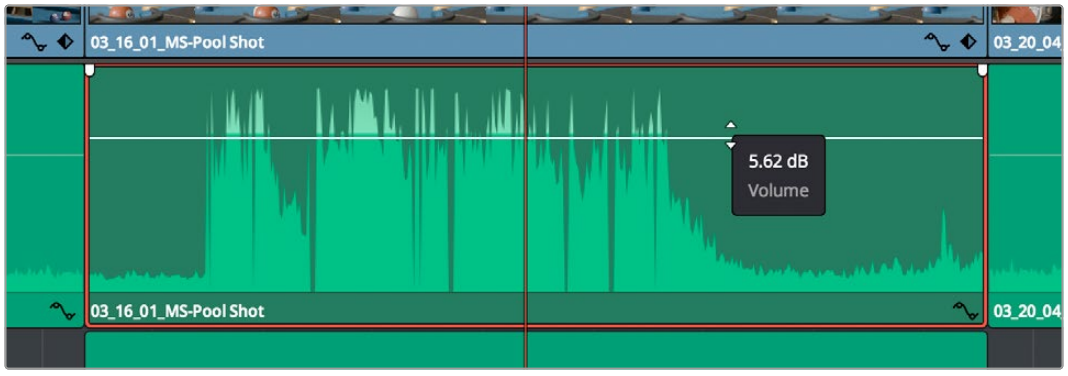

Dragging a volume overlay to adjust the clip level

For projects requiring more advanced audio tools, the Fairlight page provides you with a full audio post production environment.

The Fairlight Page

The ‘Fairlight’ page in DaVinci Resolve is where you adjust your project audio. In single monitor mode, this page gives you an optimized look at the audio tracks of your project, with an expanded mixer and custom monitoring controls that make it easy to evaluate and adjust levels in order to create a smooth and harmonious mix. Don’t feel overwhelmed by the vast array of features in front of you, they are all there to help you deliver the best audio quality for your project.

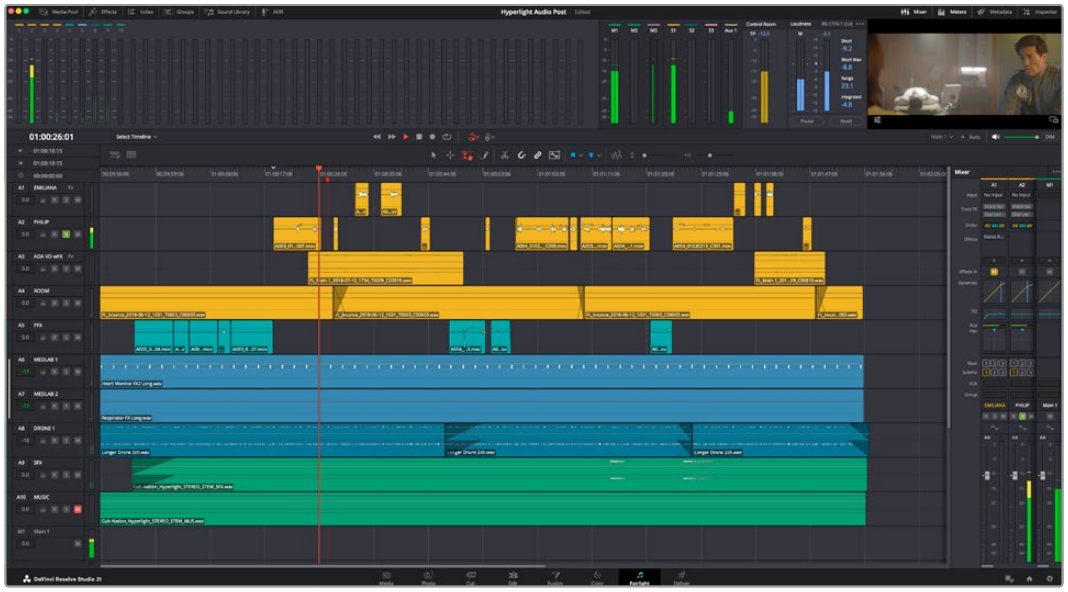

This guide provides a basic overview of the features on the Fairlight page, but to learn more about all the details for each feature, refer to the DaVinci Resolve manual. The DaVinci Resolve manual provides details on the purpose of each tool and describes how to use them in easy to follow steps.

The Audio Timeline

- **Track Header:** At the left of each track is a header area that displays the track number, track name, track color, audio channels, fader value and audio meters. The track header also contains different controls for locking and unlocking tracks, plus solo and muting controls. These controls can help to keep your tracks organized, and let you preview individual tracks one at a time. The keyframe spline editor lets you edit keyframes for any item with splines for smoothing automation.
- **Tracks:** Each track on the Fairlight page is divided into lanes, which show each individual channel of clip audio for editing and mixing. The edit page hides these individual audio channels, displaying only a single clip in the timeline to make it easier to edit multi channel sources without needing to manage a huge number of tracks.



The track header on track A1 indicates a mono track with a single lane for mono audio, and the A2 track header indicates a stereo track with two lanes to accommodate stereo audio

What is a Bus?

A bus is essentially a destination channel made up of audio sources grouped together into a single signal that can be controlled via a single channel strip. Fairlight automatically creates a bus for you and all the audio tracks in your timeline are sent to this bus by default, this means you can adjust the overall level of your audio mix once you have adjusted the level of each individual track.

If your edit is a bit more complex you can create more buses and combine multiple tracks of audio that belong to the same category such as dialogue, music or effects so that everything in that category can be mixed as a single audio signal. For example, if you have five dialogue tracks, you can route the output of all five dialogue tracks to a separate bus, and the level of all dialogue can then be mixed with a single set of controls.

The Fairlight Flexbus structure gives you complete flexibility over bus types and signal routing including the option for bus-to-bus, track-to-bus and bus-to-track routing. For more information on audio bus settings in Fairlight, refer to the DaVinci Resolve manual.

The Mixer

Each audio track in your timeline corresponds to an individual channel strip in the Mixer, and by default there's a single strip on the right for the default bus labeled 'Bus 1'. Additional channel strips will appear on the right hand side with a set of controls for each additional bus you create. A set of graphical controls allows you to assign track channels to output channels, adjust EQ and dynamics, set levels and record automation, pan stereo and surround audio, and mute and solo tracks.



The audio mixer, with channel strips corresponding to the tracks in the timeline

Using the Equalizer to Enhance your Audio

After adjusting the audio levels of your audio clips in your project, you may find that the audio needs further finessing. In some cases you may find that the dialogue, music and sound effects are competing for the same frequency on the audio spectrum, making your audio too busy and unclear. This is where using EQ can help, as it allows you to specify the parts of the audio spectrum that each track occupies. You can also use an equalizer to help remove unwanted elements from your audio by isolating and reducing the level on particular frequencies that contain low rumbles, hums, wind noise and hiss, or simply to improve the overall quality of your sound so it is more pleasing to listen to.

DaVinci Resolve provides EQ filters that can be applied at a clip level to each individual clip or at the track level to affect entire tracks. Each audio clip in the timeline has a four band equalizer in the inspector panel, and each track has a 6 band parametric equalizer in the mixer panel. The graphical and numeric controls for boosting or attenuating different ranges of frequencies, and different filter types allow you to define the shape of the EQ curve.

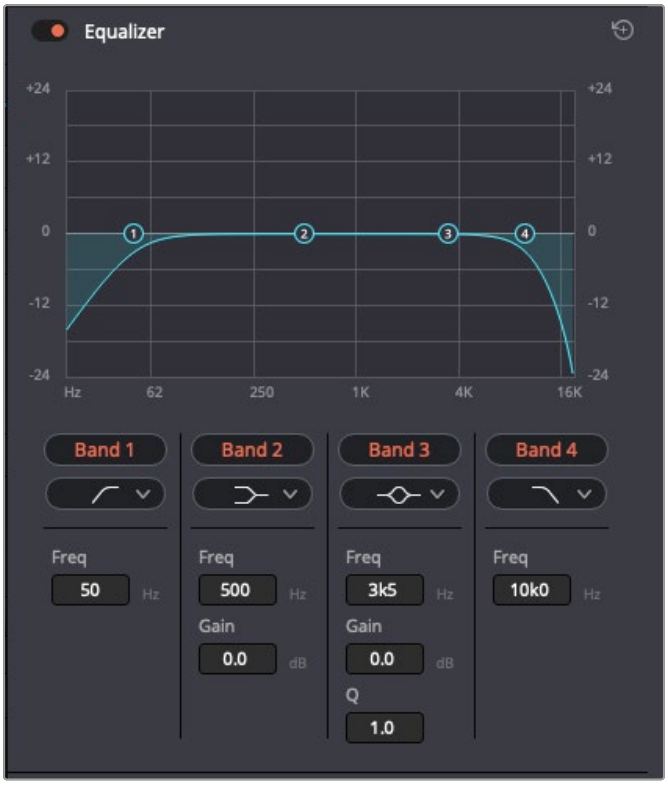

The four band equalizer can be applied to every clip in the timeline

Outer bands let you make band filter adjustments using hi-shelf, lo-shelf, hi-pass and lo-pass filters. A pass filter affects all the frequencies above or below a particular frequency, by removing those frequencies completely from the signal. For example, a high pass filter will allow the high frequencies to pass through the filter while cutting the low frequencies. Any frequencies outside the cutoff frequency are cut gradually in a downward sloping curve.

A shelf filter is less aggressive, and is useful when you want to shape the overall top end or low end of the signal without completely removing those frequencies. The shelf filter boosts or cuts the target frequency and every frequency either above or below it evenly, depending on whether you use a high shelf or low shelf.

The middle sets of band controls let you make a wide variety of equalization adjustments, and can be switched between lo-shelf, bell, notch, and hi-shelf filtering options.

- **Bell:** Bell filters boost or cut frequencies around a given center point of the bell curve, and as the name suggests the shape of the curve is like a bell.
- **Notch:** Notch filters allow you to specifically target a very narrow range of frequencies. For example, removing a mains hum at 50 or 60Hz.
- **Lo-Shelf:** Low shelf filters boost or cut the target frequency at the low end, and every frequency below it
- **Hi-Shelf:** High shelf filters boost or cut the target frequency at the high end, and every frequency above it

To add EQ to an individual clip:

1. Select the clip in the timeline that you want to add the EQ filter to.
2. Click on the inspector and then click the ‘equalizer’ enable button.

To add EQ to a track:

1. Double click in the EQ section for one of your tracks in the mixer to open the equalizer for that track.
2. Select the band filter type from the dropdown menu for the band you want to adjust.



The EQ section in the mixer panel indicating an EQ curve has been applied to track one



The 6 Band parametric equalizer that can be applied to every track

Once you have added EQ to your clip or track, you can adjust the EQ for each band. Note that controls may vary depending on which band filter type is selected.

To adjust the EQ for a band filter:

1. Select the band filter type from the dropdown menu for the band you want to adjust.
2. Adjust the ‘frequency’ value to select the center frequency of the EQ adjustment.
3. Adjust the ‘gain’ value to boost or attenuate the frequencies governed by that band.
4. Use the ‘Q factor’ value to adjust the width of affected frequencies.

Use the reset button to reset all controls in the EQ window to their defaults.

Fairlight has many controls you can use to improve the quality of each audio track. You can add more tracks and arrange buses to organize them, plus add effects like delay or reverb, and generally perfect your audio mix.

Adding VFX and Compositing on the Fusion Page

Now that you have completed your edit, you can open the Fusion page to add 2D or 3D visual effects and motion graphics right within DaVinci Resolve. Unlike layer based compositing software, Fusion uses nodes, giving you the freedom to build complex effects while routing image data in any direction. The nodes window clearly shows every tool used along the way. If you have experienced the node workflow in the color page, this will feel familiar to you.



The Fusion Page

The Fusion page features 2 viewer windows across the top with transport controls to view your media, an inspector window to the right to access tool settings, and a nodes window at the bottom where you build your composition. While the viewers and transport controls are always visible, clicking on the icons on the interface toolbar at the very top of the display will let you show or hide the nodes and inspector windows, or reveal or hide additional windows including the effects library and editors for spline and keyframes.

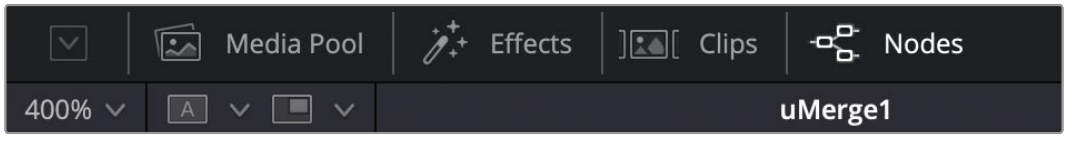

- **Media Pool:** The media pool functions the same way as it appears in the edit page. Simply drag additional media from your bins directly to your composition.
- **Effects:** The effects library is where you will find your Fusion tools and templates sorted into categories including particle, tracking, filters and generators. You can either click on the tool or drag it to the nodes area to add it to your composition. The media pool and effects library take up the same screen area, so you can swap between the two to keep your viewers as large as possible.
- **Clips:** Clicking the clips tab will reveal or hide thumbnails representing clips on your timeline. The thumbnails are located underneath the nodes editor, letting you instantly navigate to other clips.

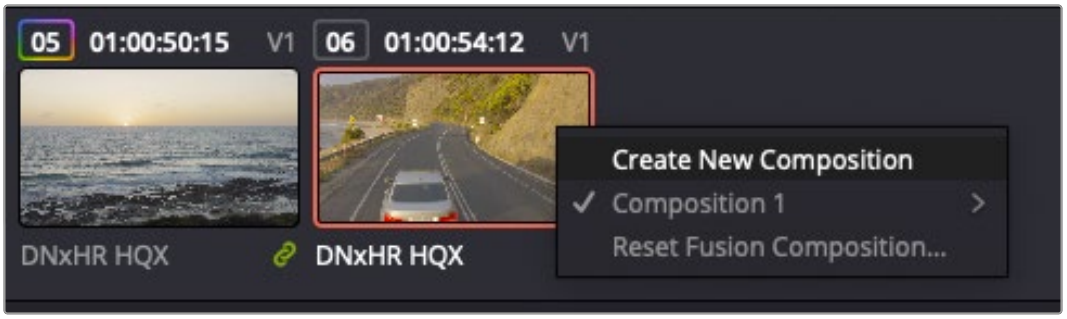

Create a new version of your composition by right clicking on a thumbnail and selecting 'create new composition'.

- **Viewers:** The viewers are always visible and let you see the different views of your composition, for example an overall 3D perspective via the merge 3D node, a camera output, or your final render output. These viewers also let you see how your changes are affecting a specific element.

  You can choose which nodes to view by clicking on a node and typing '1' for the left viewer or '2' for the right viewer. White button icons appear beneath the node to let you know which viewer it is assigned to. If you're using external video monitoring, there will be a third button available to route your media to your external video monitor.

TIP You can also assign a node to a viewer by dragging the node into the viewer itself.

The transport controls underneath the viewers let you skip to the start or end of the clip, play forward or reverse, or stop playback. The time ruler displays the entire range of a clip, with yellow marks indicating the in and out points.



The yellow marks on the time ruler indicate your clip's in and out points on your timeline. If you are using a Fusion clip or compound clip, the time ruler will only show you the duration of the clip as it appears on the timeline, without handles.

- **Nodes:** The nodes window is the heart of the Fusion page where you build your node tree by connecting tools together from one node's output to another node's input. This area will change size depending on which editors are open, for example the spline or keyframes editor. A toolbar at the top of the nodes area features the most commonly used tools for fast access.
- **Spline:** When the spline editor is open, it will appear to the right of the nodes window. This editor lets you make precise adjustments to each node, such as smoothing the animation between two keyframes using bezier curves.
- **Keyframes:** Keyframes for each tool can be added, removed or modified using the keyframes editor. This also appears to the right of the nodes viewer.
- **Metadata:** The metadata window will show you metadata available for the active clip, including the codec, frame rate and timecode.
- **Inspector:** The inspector in the top right corner displays all settings and modifiers available for one or more selected nodes. Additional tab options will appear to provide quick access to other settings for nodes sorted by category.

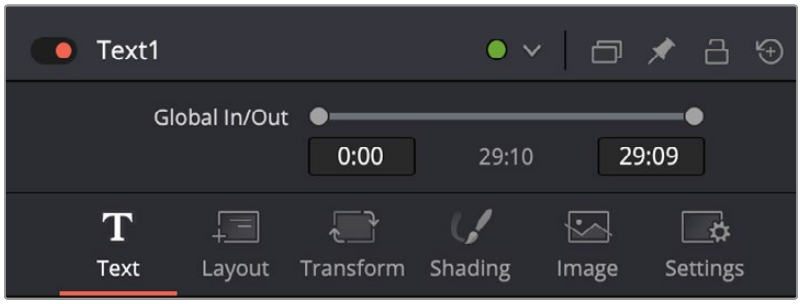

The text inspector contains additional tabs for text, layout, transform, shading, image and settings.

Getting Started with Fusion

To get started with Fusion, simply position your playhead over any clip on your timeline and click on the 'Fusion' tab to open the Fusion page.

On the Fusion page, your clip is immediately available in a media input node labeled 'MediaIn'. Every composition will begin with a 'mediain' and a 'mediaout' node. This mediain node represents the top most clip of your timeline at the playhead, and ignores any clips underneath. Any adjustments you've applied to the clip on the edit page, such as transform tools and cropping changes, are also included.

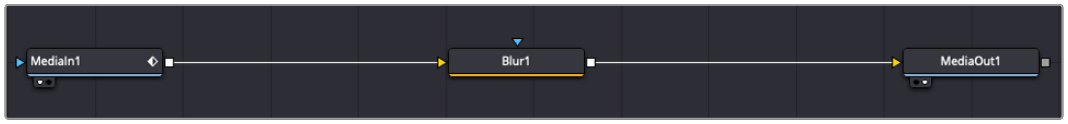

The media output node, named 'MediaOut', is the node that sends the output back to your timeline on DaVinci Resolve's edit page.

TIP ResolveFX or OFX plug-ins applied to clips in the cut or edit pages are not applied in the Fusion page. This is because Fusion effects occur prior to color correction and OFX/ResolveFX processing. If you want OFX applied before Fusion effects, right click the clip in the edit page and select 'new fusion clip' before clicking on the Fusion page.

Understanding Nodes

It can be helpful to think of each node as a visual icon representing a single tool or effect. Nodes are connected to other nodes to build the overall composition, much like ingredients in a cake. It's important to understand the inputs and outputs of each node as this will help you navigate the flow of your composition while building detailed visual effects.

Some tools have multiple inputs and outputs you can connect to other nodes. The merge node, for example, lets you attach a foreground input, background input, and a mask input for mattes or keys.

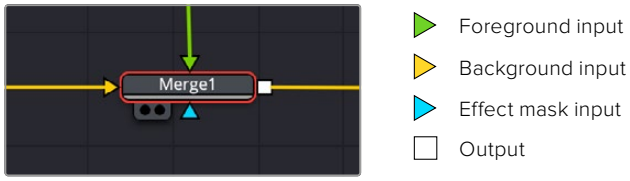

Multiple outputs on nodes means a single node can connect to many different nodes in your composition, so you don't have to duplicate clips as you would in layer based software. Arrows on the line between connected nodes are a great visual indicator to show you which direction the image data is flowing.

Adding Nodes to the Node Editor

Adding effects is as simple as placing nodes on the line between the 'mediain' and 'mediaout' nodes.

There are a few ways you can do this. You can hold down the shift button and drop a node between two nodes, or click on the node you want to attach an effect to and select the tool you want to add. The new node will automatically connect to the tool selected. You can also add a node anywhere on the node window and manually connect nodes by dragging the output of one to the input on another.

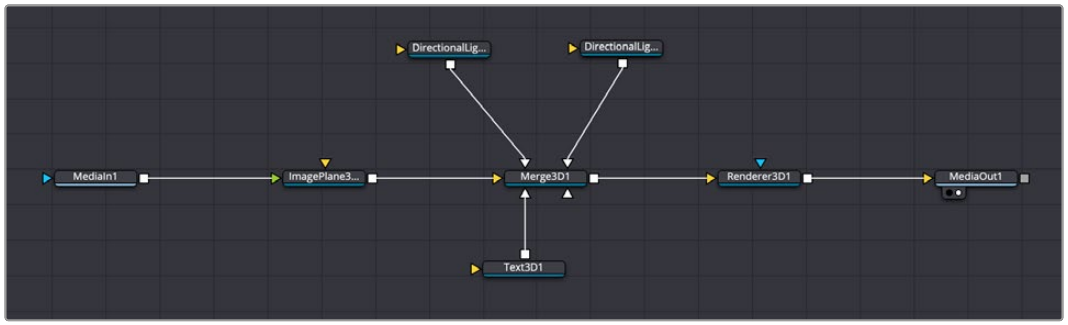

The most commonly used tool is the 2D or 3D merge node. This node is like a central hub that combines tools on the node editor into a single output.

The merge node has controls for how the inputs are managed, including settings for size, position, and blend. These settings are all accessible in the inspector panel when the merge node is selected.

The toolbar above the node panel contains the most commonly used tools as icons that you can either click on to add the node, or drag the tool to the node panel. If you want to see all the complete tools available, click on the 'effects library' in the top left corner and expand the 'tools' option. Here you'll find all the tools sorted by category, as well as a set of pre-built 'templates' you can use, for example lens flares, shaders and backgrounds.

TIP Once you're familiar with the tool names, you can hold down 'shift' and press 'spacebar' on your keyboard and a 'select tools' menu will appear. As you type the tool name, the menu will suggest the relevant tool. This is a very fast way to select the tool you want.

Adjusting Nodes Using the Inspector Panel

Adjust your node settings using the inspector panel. Simply click on the node you want to modify and the panel will update to display its settings and controls.

With Fusion, you don't have to be viewing the node you're editing, as you can modify one node while viewing another in your composition. For example, you can modify the size and center position of a 'text+' node while the merge node is in the viewer, letting you view the text relative to the background.

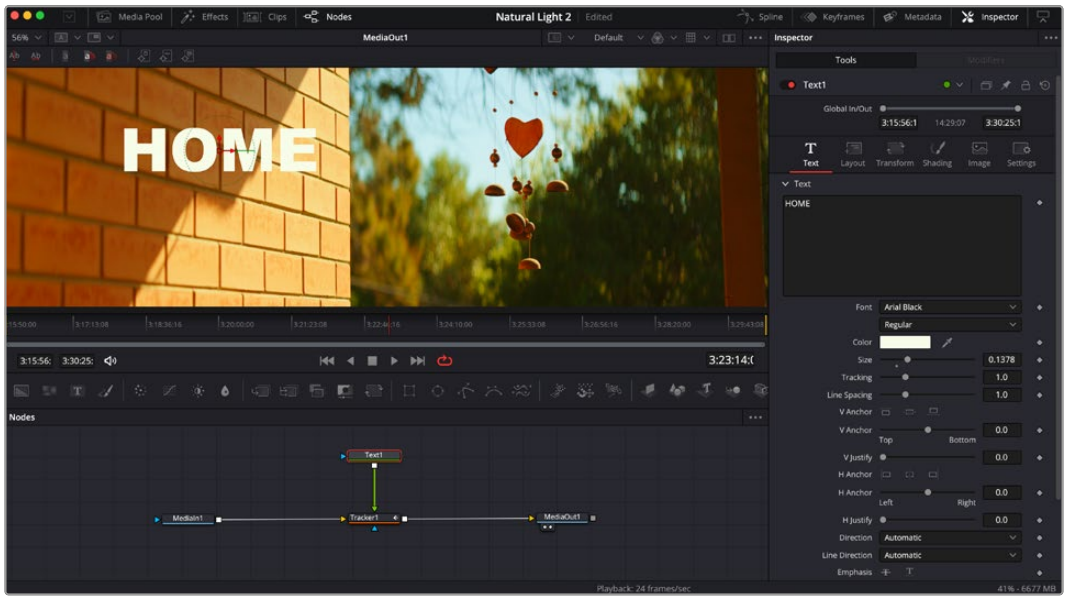

Selected nodes appear with a red border. Here the inspector panel is displaying the layout tab controls for the text node.

There are different parameters and settings you can adjust for every node depending on its task, from sizing and center positions to changing the number of particles in an emitter node. Setting keyframes and changing the settings over time will animate the effect.

Working with Keyframes

In the inspector window, set a keyframe by right clicking on a setting and choosing 'animate' from the contextual menu. The keyframe icon to the right of the setting will turn red. This means keyframes are now active and any changes you make will be applied to the current frame only. When two or more keyframes are created by changing the setting parameters on a different frame, a transition is interpolated between them. Arrows on each side of the keyframe icon let you move the playhead to those exact positions on the timeline.



Here, the ‘size’ keyframe animation has been smoothed into a bezier curve. You can click the bezier handles to shorten or lengthen the curve, or the keyframe square icons to move the keyframe location.

The splines panel gives you further control over keyframe animation. You can select keyframes, such as the first and last, and smooth the animation between them into a bezier curve by typing ‘shift’ + ’s’, or right clicking on a keyframe and selecting ‘smooth’.

Using the Motion Tracker and Adding Text

To get a better idea of how to use Fusion, we have included the following examples to show how to use the tracker tool to track an element in a clip, plus add text and attach it to the element using the tracking data.

The ‘tracker’ tool tracks pixels over time on the x & y axis, and generates data you can use to attach other elements. This is great for when you want to match the position of text to a moving object, such as a car driving along the road, or a bird as it flies across frame.

1. In the ‘effects library’, select the ‘tracker’ tool and drag it to the line between the ‘mediain’ and the ‘mediaout’ nodes. Now click the tracker node to reveal its properties in the inspector.
2. Type ‘1’ on your keyboard to see the ‘tracker’ node on the left viewer. The clip will appear in the viewer together with the tracker at its default position. Hover your mouse pointer over the tracker to reveal the tracker handle. Click on the tracker handle at the top left corner and drag the tracker to an area of interest on your clip. High contrast areas work well, for example the badge on the hood of a car. The tracker will magnify the image area for extra precision.
3. In the inspector window, click on the ‘track forward’ button to start tracking. A notification window will appear when the tracking is done. Click OK.

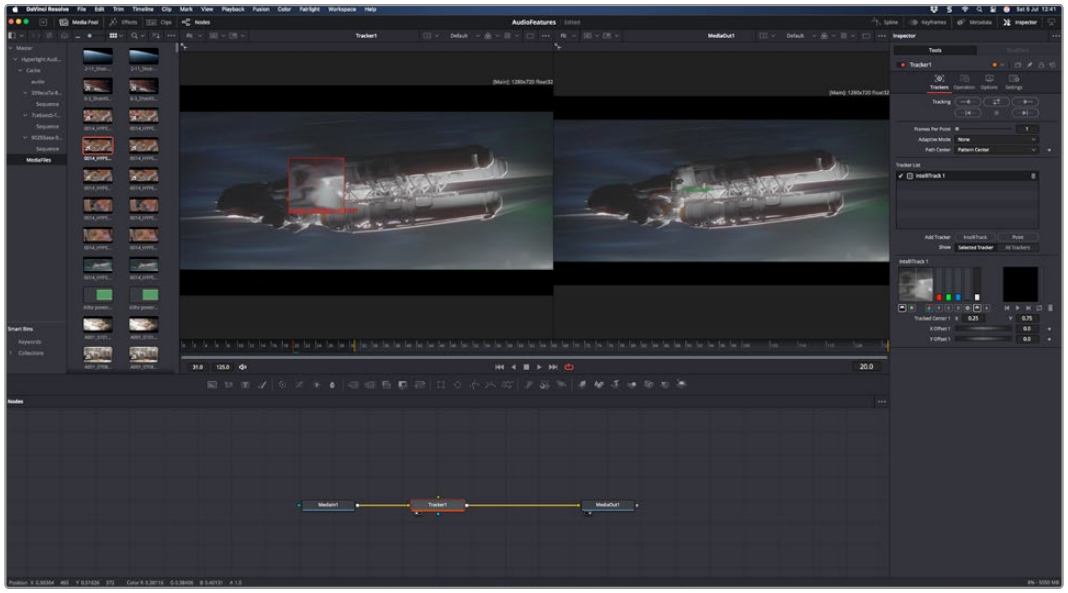

Tracking options in the inspector panel include track reverse from last frame or current frame, stop track or track forward from current frame or first frame.

TIP Track reverse or forward from current frame is great for situations where your area of interest disappears during the render range, such as a car or bird moving out of frame. This lets you track only the relevant footage.

Now you can take that tracking data and apply the motion path to a text tool.

4 Click on the ‘text+’ node icon from the toolbar of commonly used nodes and drag it to the node panel near the ‘tracker’ node. Connect the ‘text’ output square to the green foreground input on the ‘tracker’.

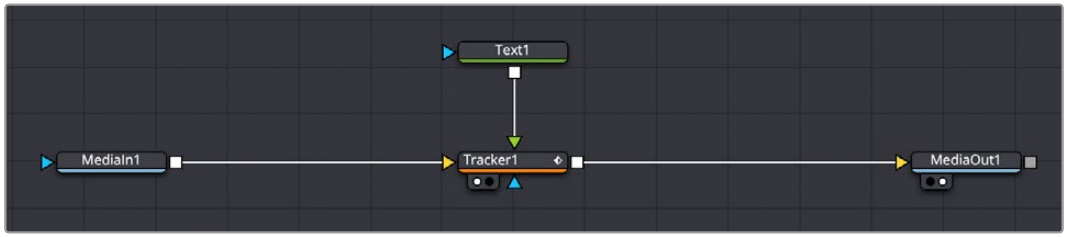

5 Click on the ‘tracker’ node and type ‘1’ so you can see the merged results on your left hand viewer. In the ‘tracker’ inspector panel, click on the ‘operations’ tab. Click the menu next to operation and select ‘match move’.

6 Click the ‘text’ node to reveal the properties in the inspector. Type your text into the text box and change the font, color and size to suit your composition.

This will apply the tracking position data from your tracker to your text. If you want to change the text offset, click on the ‘trackers’ tab back in the inspector panel and use the x and y offset scroll wheels to modify the position.



Scroll wheels at the bottom of the tracker inspector panel let you adjust the offset position for the text.

Now you can play back your composition and see your text attached to the object you have tracked!



The green square is the tracker's current position along the green path, and the red dashed line is the offset position used to animate the text.

For some shots you might want to remove track points after tracking, such as when the object you are tracking disappears off the screen. The keyframe editor makes this a very simple process.

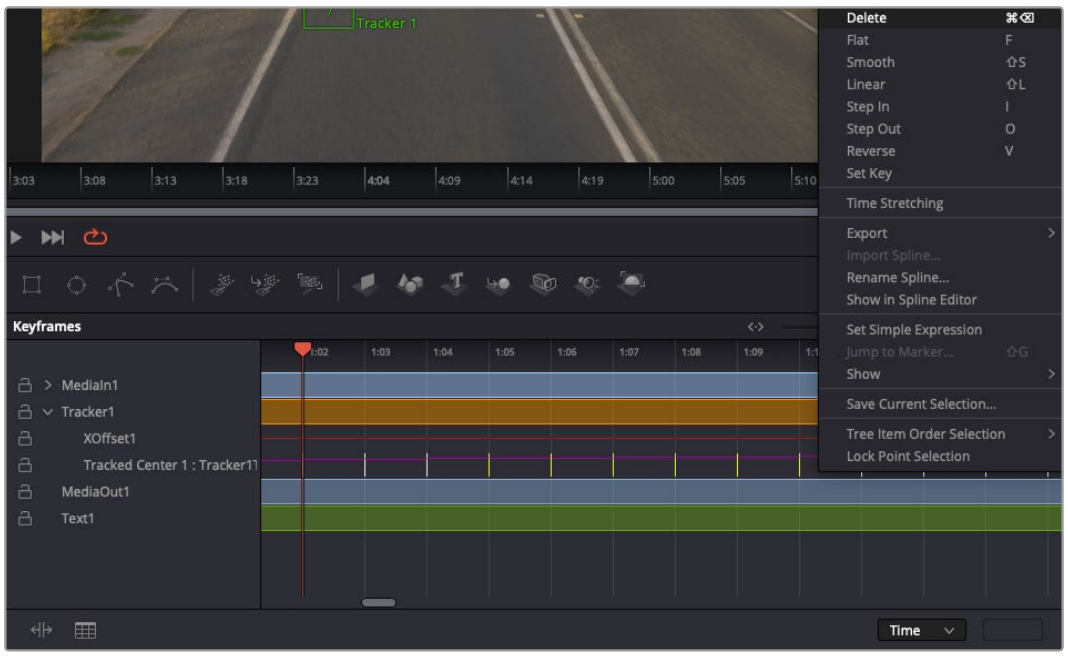

7 Click on the keyframes tab above the inspector to open the keyframes editor. Any nodes with keyframes applied will have a small arrow next to the node label, and only the parameter with keyframes added will appear in the list below. Click on the magnify icon and drag a box around the area you want to edit. This will zoom into that area so you can see the keyframes easier.

8 Move the playhead to the location of the last keyframe you want. Now select the keyframes you wish to remove by drawing a box around them with your mouse. The keyframes will highlight yellow. Right click and choose delete from the menu.

TIP If your effects are particularly system intensive, right clicking on the transport controls area will give you viewer options, including proxy playback, helping you get the most out of your system while you build your composition. Refer to the DaVinci Resolve manual for further detail on all the playback options.

You have now completed your first composition animating text to match a movement in your footage!

If you want to track an area of the image that contains a flat surface you want to enhance or replace, you can use the planar tracker. Tracking 2D planes can be helpful for changing labels and signs in a moving image, or even adding an image to a monitor or TV in your shot.

For more information about the planar tracker and the many powerful tools in the DaVinci Resolve Fusion page, see the DaVinci Resolve manual.

TIP As you build visual effects in the Fusion page, it's worth noting if the effect you are building is a 2D effect, or a 3D effect, as this will determine which merge tool is used. You may discover yourself frequently combining 2D and 3D effects in the one composite. In this scenario, it's helpful to remember that any visual effect using the 3D space needs to be rendered as a 2D image before it can be merged into a 2D composite.

We believe you will have lots of fun with Fusion and exploring Fusion's visual effects with the power of DaVinci Resolve's edit, color, and Fairlight pages. With all these tools at your finger tips, DaVinci Resolve is incredibly powerful and there is really no limit to what you can create!

Mastering Your Edit

Now you've edited, graded, added vfx and mixed your audio, you'll want to share it with others. You can use the Quick Export button, or menu selection, to output the contents of the Timeline as a self contained file in one of a variety of different formats, or use the additional features of the 'deliver' page.

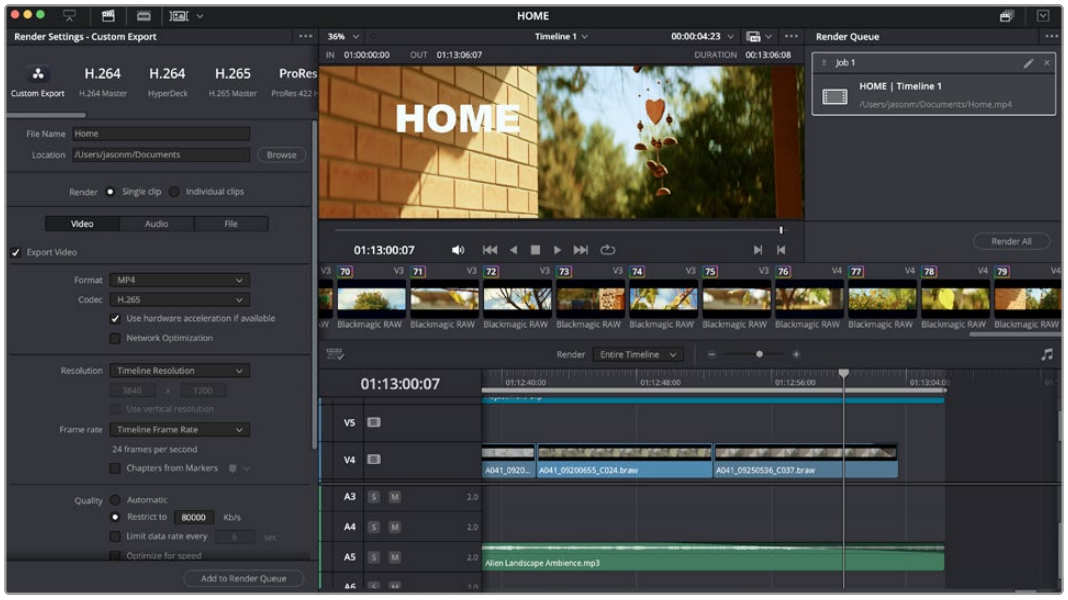

The 'deliver' page is where you export your edit. You can select from many different video formats and codecs

Quick Export

You can choose File > Quick Export to use one of a variety of export presets to export your program from any page of DaVinci Resolve. You can even use quick export to export and upload your program to one of the supported video sharing services, including YouTube, Vimeo, Twitter and Frame.io.

To use Quick Export:

1. In the 'cut', 'edit', fusion' or 'color' page, optionally set in and out points in the timeline to choose a range of the current program to export. If no timeline in or out points have been set, the entire timeline will be exported.

   Choose File > Quick Export.

2. Select a preset to use from the top row of icons in the quick export dialog, and click 'export'.

3 Choose a directory location and enter a file name using the export dialog, then click ‘save’. A progress bar dialog appears to let you know how long the export will take.

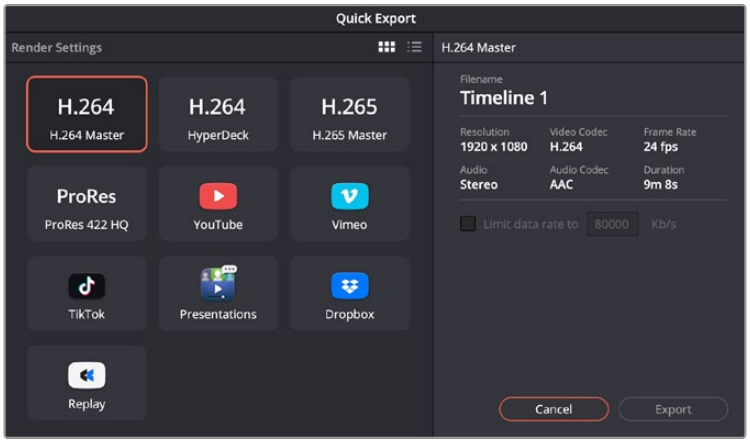

The quick export dialog

The Deliver Page

This page lets you select the range of clips you want to export, plus the format, codec and resolution you want. You can export in many types of formats such as QuickTime, AVI, MXF and DPX using codecs such as 8-bit or 10-bit uncompressed RGB/YUV, ProRes, DNxHD, H.264 and more.

To export a single clip of your edit:

1 Click on the ‘deliver’ tab to open the deliver page.

2 Go to the ‘render settings’ window on the top left of the page. Choose from a number of export presets, for example YouTube, Vimeo and audio presets, or you can set your own export settings manually by leaving it set to the default ‘custom’ preset and entering your own parameters. For this example, select YouTube, then click on the arrow next to the preset and select the 1080p video format.

   The frame rate will be locked to your project frame rate setting.

3 Underneath the presets you will see the timeline filename and the target location for your exported video. Click the ‘browse’ button and choose the location where you want to save your exported file and then select ‘single clip’ from the render option.

4 Immediately above the timeline, you’ll see an options box with ‘entire timeline’ selected. This will export the entire timeline, however you can select a range of the timeline if you want to. Simply choose ‘in/out range’ and then use the ‘i’ and ‘o’ hot key shortcuts to choose the in and out points in your timeline.

5 Go to the bottom of the ‘render settings’ and click on the ‘add to render queue’ button.

   Your render settings will be added to the render queue on the right side of the page. Now all you have to do is click ‘start render’ and monitor the progress of your render in the render queue.

   When your render is complete you can open the folder location, double click on your new rendered clip and watch your finished edit.

Now that you have a basic knowledge of how to edit, color, mix audio and add visual effects, we recommend experimenting with DaVinci Resolve. Refer to the DaVinci Resolve manual for more details on how each feature can help you make the most of your project!

Developer Information

Camera Control REST API

If you are a software or hardware developer you can build custom applications or leverage ready to use tools such as REST client or Postman to seamlessly control and interact with your compatible Blackmagic camera using Camera Control REST API. This API enables you to perform a wide range of operations, such as starting or stopping recordings, accessing disk information and much more. Whether you're developing a custom application tailored to your specific needs or utilizing existing tools, this API empowers you to unlock the full potential of your Blackmagic camera with ease. We look forward to seeing what you come up with!

NOTE It's important to mention that controlling Blackmagic cameras via REST API relies on the web manager being enabled on each compatible Blackmagic camera. Enable the web media manager in the Blackmagic Camera Setup 'network access' settings for each camera you are controlling.

The following Blackmagic cameras are compatible with Camera Control REST API:

▪ Blackmagic PYXIS 6K	▪ Blackmagic PYXIS 12K
▪ Blackmagic Cinema Camera 6K	
▪ Blackmagic URSA Cine 12K LF	▪ Blackmagic URSA Cine 17K 65
▪ Blackmagic URSA Cine Immersive	
▪ Blackmagic URSA Broadcast G2	
▪ Blackmagic Micro Studio Camera 4K G2	
▪ Blackmagic Pocket Cinema Camera 4K	▪ Blackmagic Pocket Cinema Camera 6K G2 ▪ Blackmagic Pocket Cinema Camera 6K Pro
▪ Blackmagic Studio Camera 4K Plus ▪ Blackmagic Studio Camera 4K Pro ▪ Blackmagic Studio Camera 6K Pro	▪ Blackmagic Studio Camera 4K Plus G2 ▪ Blackmagic Studio Camera 4K Pro G2

Sending API Commands

To send an API command to your camera from a third party application such as Postman, add /control/api/v1/ to the end of the camera's Web media manager URL or IP address. For example, https://URSA-Cine-12K-LF.local/control/api/v1/

You can find the Web media manager URL and IP address information in Blackmagic Camera Setup.

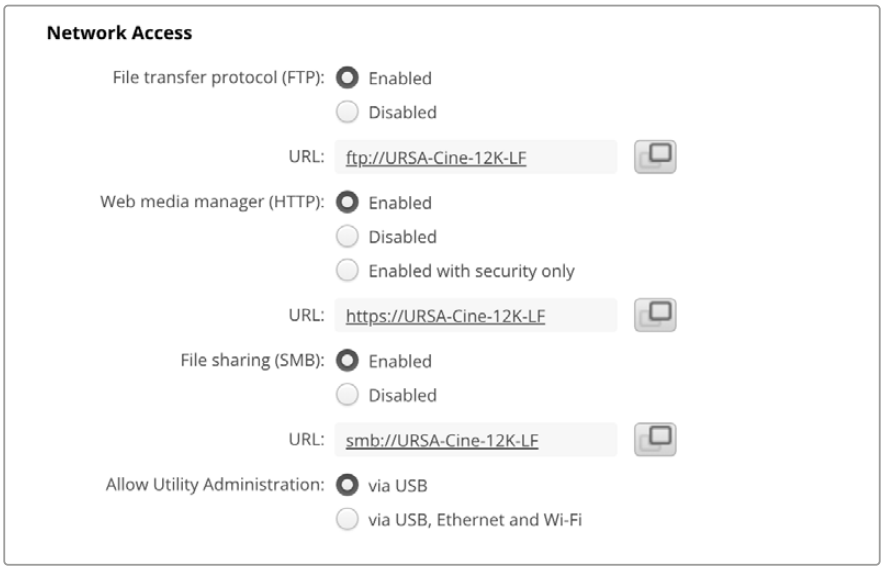

The Web media manager URL in Blackmagic Camera Setup

Downloading API's from your Camera

You can download REST API YAML documentation from your camera by adding /control/documentation.html to the end of the camera's Web media manager URL or IP address. For example, https://URSA-Cine-12K-LF.local/control/documentation.html

NOTE It's worth noting that changing the camera name in Blackmagic Camera Setup will also change the camera's Web media manager URL.

Panel Control API

API for externally controlling hardware panel elements on Blackmagic Design products.

GET /panel/devices

Get list of all available hardware panel controls.

Response

200 - List of panel devices.

The response is JSON.

Name	Type	Description
	array	
[i]	object	
[i].name (required)	string	Unique name of the hardware panel control (URL-friendly alias / device node name).
[i].type (required)	string	Type of hardware control. Currently only “button” is supported. Possible values are: button.
[i].label	string	Human-readable display name for the hardware control.
[i].enabled (required)	boolean	Whether the hardware control is currently enabled and can accept actions.

500 - Internal server error.

GET /panel/devices/{name}/state

Get specific hardware control state.

Parameters

Name	Type	Description
{name} (required)	string	Name of the hardware panel control. Obtainable from GET /panel/devices.

Response

200 - Device state.

The response is JSON.

Name	Type	Description
name (required)	string	Unique name of the hardware panel control (URL-friendly alias / device node name).
type (required)	string	Type of hardware control. Currently only “button” is supported. Possible values are: button.
label	string	Human-readable display name for the hardware control.
enabled (required)	boolean	Whether the hardware control is currently enabled and can accept actions.

404 - Device not found.

500 - Internal server error.

PUT /panel/devices/{name}/state

Inject hardware control action.

Parameters

Name	Type	Description
{name} (required)	string	Name of the hardware panel control. Obtainable from GET /panel/devices.

Name	Type	Description
action (required)	string	Action to perform on the hardware control. Currently only “press” is supported for buttons. Possible values are: press.
holdDuration	integer	Optional duration in milliseconds to hold the button pressed. - Minimum: 0 (immediate release) - Maximum: 5000 (5 seconds) - Default: 100 (if not specified) - To keep holding beyond 5 seconds, send a new request before the current one expires

Response

204 - Action performed successfully.

400 - Invalid action, device is disabled, or hold duration exceeds maximum limit.

404 - Device not found.

500 - Internal server error.

Livestream Control API

API for controlling Livestreams on Blackmagic Design products.

GET /livestreams/0

Get the livestream’s current status.

Response

200 - Livestream’s current status.

The response is JSON.

Name	Type	Description
status (required)	string	Possible values are: Idle, Connecting, Streaming, Flushing, Interrupted.
bitrate (required)	integer	Current bitrate (bps).
effectiveVideoFormat (required)	string	Effective video format for the livestream, serialised as a string.
duration	integer	Current stream duration in seconds. Absent if livestream is idle.
cache	number	Current stream cache usage percentage.

501 - Not implemented for this device.

GET /livestreams/0/start

Determine if the livestream is active.

Response

200 - Livestream active status.

The response is JSON.

Name	Type	Description
	boolean	True when the livestream is active.

501 - Not implemented for this device.

PUT /livestreams/0/start

Start the livestream.

Response

204 - Livestream started.

501 - Not implemented for this device.

GET /livestreams/0/stop

Determine if the livestream is inactive.

Response

200 - Livestream inactive status.

The response is JSON.

Name	Type	Description
	boolean	True when the livestream is inactive.

501 - Not implemented for this device.

PUT /livestreams/0/stop

Stop the livestream.

Response

204 - Livestream stopped.

501 - Not implemented for this device.

GET /livestreams/0/available

Check if livestreaming is currently available.

Response

200 - Livestreaming availability status.

The response is JSON.

Name	Type	Description
available (required)	boolean	True if livestreaming is currently available.
reasons (required)	array	Reasons why livestreaming is unavailable (empty if available is true).
reasons[i]	string	Possible values are: not-supported, unsupported-format, in-playback, pending-format-transition, unexpected-reason.

501 - Not implemented for this device.

GET /livestreams/0/activePlatform

Get the currently selected platform configuration for the livestream.

Response

200 - Livestream active platform configuration.

The response is JSON.

Livestream's current active platform configuration.

Name	Type	Description
platform (required)	string	Platform name.
server (required)	string	The platform's server name, or "Custom" when the URL is customizable.
key	string	Stream key. Assumed to be empty if missing.
passphrase	string	Passphrase. Only included for SRT streams.
quality (required)	string	Quality level name.
url	string	Livestream destination. Only included when URL is customizable.

501 - Not implemented for this device.

PUT /livestreams/0/activePlatform

Set the currently selected platform configuration for the livestream.

Parameters

Livestream's current active platform configuration.

Name	Type	Description
platform (required)	string	Platform name.
server (required)	string	The platform's server name, or "Custom" when the URL is customizable.
key	string	Stream key. Assumed to be empty if missing.
passphrase	string	Passphrase. Only included for SRT streams.
quality (required)	string	Quality level name.
url	string	Livestream destination. Only included when URL is customizable.

Response

204 - Livestream active platform configuration updated.

400 - Bad Request - invalid configuration.

501 - Not implemented for this device.

GET /livestreams/platforms

Get the list of available platforms.

Response

200 - List of available platforms.

The response is JSON.

Name	Type	Description
	array	List of available platforms names.
[i]	string	Platform name.

501 - Not implemented for this device.

GET /livestreams/platforms/{platformName}

Get the service configuration for a platform.

Parameters

Name	Type	Description
{platformName} (required)	string	Name of the platform. Obtainable from GET /livestreams/platforms.

Response

200 - Service configuration for specified platform.

The response is JSON.

Livestream platform service configuration.

Name	Type	Description
platform (required)	string	Corresponding platform name.
key	string	Default stream key.
servers (required)	array	List of server configurations.
servers[i]	object	Server configuration.
servers[i].server (required)	string	Server name.
servers[i].url (required)	string	Livestream destination.
servers[i].srtExtensions	array	Miscellaneous tags used for SRT livestreams.
servers[i].srtExtensions[i]	object	Dictionary object mapping SRT tag strings to values.
servers[i].srtExtensions[i][{key}]	string	SRT tag value.
servers[i].group	string	Logical grouping of the server.
profiles (required)	array	List of profile configurations.
profiles[i]	object	Quality configuration.
profiles[i].profile (required)	string	Quality level name.
profiles[i].configs (required)	array	List of video format configurations.
profiles[i].configs[i]	object	Video format configuration for profiles.
profiles[i].configs[i].resolution (required)	string	Video format serialised as a string.
profiles[i].configs[i].fps (required)	string	Frames per second.
profiles[i].configs[i].bitrate (required)	integer	Pixel bitrate (bps).
profiles[i].configs[i].audioBitrate	integer	Audio bitrate (bps).
profiles[i].configs[i].keyFrameInterval	integer	How often a key frame is sent, in seconds.
profiles[i].configs[i].videoCodecs	array	Supported video encoding algorithm/s.
profiles[i].configs[i].videoCodecs[i]	string	Video encoding algorithm. Possible values are: H264, H265.
profiles[i].lowLatency (required)	boolean	If true, fewer frames will be buffered in the livestream.
defaultProfile	string	Quality level name.
credentials	object	Credientials used for RTMP streams.
credentials.username (required)	string	The username part of the creditials. Only used for RTMP streams.

Name	Type	Description
credentials.password (required)	string	Used for RTMP streams, also used as Passphrase for SRT streams.
customizableUrlEnabled	boolean	True when the server URL is customizable.

400 - Bad Request - invalid platform name.

404 - Platform not found.

501 - Not implemented for this device.

GET /livestreams/customPlatforms

Get a list of custom platform files.

Response

200 - List of custom platform files.

The response is JSON.

Name	Type	Description
	array	List of custom platform file names.
[i]	string	Custom platform file name.

204 - No custom platforms available.

501 - Not implemented for this device.

DELETE /livestreams/customPlatforms

Remove all custom configuration files.

Response

204 - All custom configuration files removed.

501 - Not implemented for this device.

GET /livestreams/customPlatforms/{filename}

Get a custom platform file.

Parameters

Name	Type	Description
{filename} (required)	string	Name of the custom platform file. Obtainable from GET /livestreams/customPlatforms.

Response

200 - Custom platform file.

The response is XML.

Blackmagic streaming XML file format.

Name	Type	Description
	object	Blackmagic streaming XML file format.

404 - File not found.

501 - Not implemented for this device.

PUT /livestreams/customPlatforms/{filename}

Update a custom platform file if it exists, if not, create a new file with the given file name.

Parameters

Name	Type	Description
{filename} (required)	string	Name of the custom platform file. Obtainable from GET /livestreams/customPlatforms.

Blackmagic streaming XML file format.

Name	Type	Description
	object	Blackmagic streaming XML file format.

Response

204 - Custom platform file created or updated.

400 - Bad Request - invalid filename or XML content.

501 - Not implemented for this device.

DELETE /livestreams/customPlatforms/{filename}

Remove the given custom platform file.

Parameters

Name	Type	Description
{filename} (required)	string	Name of the custom platform file. Obtainable from GET /livestreams/customPlatforms.

Response

204 - Custom platform file removed.

404 - File not found.

501 - Not implemented for this device.

LUT Control API

API for listing the LUTs stored on a Blackmagic Design product, transferring the .cube files themselves, and selecting which of them are loaded into its LUT slots.

NEW!

GET /luts

Retrieve the LUT catalog.

Response

200 - Returns the LUT catalog.

The response is JSON.

Name	Type	Description
slotCount (required)	integer	Number of LUT slots this product has.
luts (required)	array	Every LUT stored on the device.
luts[i]	object	
luts[i].fileName (required)	string	Name of the .cube file, as used when loading the LUT into a slot.

Name	Type	Description
luts[i].title	string	Title from the .cube file header. Empty for LUTs that carry no title.
luts[i].titleOutputOnly	string	Shortened title describing only the output of the LUT. Empty for LUTs that carry no title.
luts[i].inputColorScience	string	color science the LUT expects at its input. Unknown for LUTs that do not declare one. Possible values are: Unknown, Gen5, Gen6.
luts[i].outputGamut	string	color gamut the LUT outputs. Unknown for LUTs that do not declare one. Possible values are: Unknown, Rec709, Rec2020, P3-D65.
luts[i].outputGamma	string	Gamma the LUT outputs. Possible values are: SDR, HLG, PQ.
luts[i].visible (required)	boolean	True when this LUT is usable with the color science the product is currently recording in.

422 - Failed to read the LUT catalog.

NEW! PARAMETERS /luts/{fileName}

NEW! GET /luts/{fileName}

Download a LUT file.

Response

200 - Returns the .cube file.

The response is a binary file.

400 - Invalid LUT file name.

404 - No LUT with the given file name is stored on the device.

501 - LUT files cannot be downloaded from this device.

NEW! PUT /luts/{fileName}

Upload a LUT file.

Response

204 - LUT stored successfully.

400 - Invalid LUT file name, empty body, or a .cube file this device cannot use.

413 - The .cube file is too large.

501 - LUT files cannot be uploaded to this device.

NEW!

GET /luts/slots

Retrieve the state of every LUT slot.

Response

200 - Returns the state of every LUT slot.

The response is JSON.

Name	Type	Description
slots	array	One entry per LUT slot, ordered by slot index.
slots[i]	object	
slots[i].slot (required)	integer	Index of the LUT slot.
slots[i].loaded (required)	boolean	True when a LUT is loaded into this slot. The remaining fields are absent when it is false.
slots[i].fileName	string	Name of the .cube file loaded into this slot.
slots[i].embedded	boolean	True when the loaded LUT came from the clip being played back rather than from the LUT catalog.
slots[i].gamma	string	Gamma the loaded LUT outputs. Possible values are: SDR, HLG, PQ.

422 - Failed to read a LUT slot state.

NEW!

GET /luts/slots/{slotIndex}

Get the state of a single LUT slot.

Parameters

Name	Type	Description
{slotIndex} (required)	integer	Index of the LUT slot. Valid values are 0 to slotCount - 1, where slotCount comes from /luts.

Response

200 - Returns the state of the LUT slot.

The response is JSON.

Name	Type	Description
slot (required)	integer	Index of the LUT slot.
loaded (required)	boolean	True when a LUT is loaded into this slot. The remaining fields are absent when it is false.
fileName	string	Name of the .cube file loaded into this slot.
embedded	boolean	True when the loaded LUT came from the clip being played back rather than from the LUT catalog.
gamma	string	Gamma the loaded LUT outputs. Possible values are: SDR, HLG, PQ.

404 - LUT slot not found.

422 - Failed to read the LUT slot state.

NEW! PUT /luts/slots/{slotIndex}

Load a LUT into a slot.

Parameters

Name	Type	Description
{slotIndex} (required)	integer	Index of the LUT slot. Valid values are 0 to slotCount - 1, where slotCount comes from /luts.

Name	Type	Description
fileName	string	Name of the .cube file to load. Obtainable from the `fileName` of an entry in GET /luts. Empty empties the slot.

Response

204 - LUT slot updated successfully.

400 - Invalid input.

404 - LUT slot not found, or no LUT with the given file name is stored on the device.

422 - Failed to empty the LUT slot.

NEW! GET /luts/recordWithLUT

Get the record with LUT enable state.

Response

200 - Returns the record with LUT enable state.

The response is JSON.

Name	Type	Description
enabled (required)	boolean	Indicates if the feature is enabled.

NEW! PUT /luts/recordWithLUT

Set the record with LUT enable state.

Parameters

Name	Type	Description
enabled (required)	boolean	Indicates if the feature is enabled.

Response

204 - Record with LUT enable updated successfully.

400 - Invalid input.

422 - Failed to set the record with LUT enable.

Clips Control API

API for listing clips on disk.

GET /clips

Get the list of clips on the active disk.

Response

200 - List of clips on the active disk.

The response is JSON.

List of media clips.

Name	Type	Description
clips (required)	array	
clips[i]	object	Media clip.
clips[i].clipUniqueId (required)	integer	Unique ID used to identify this clip.
clips[i].filePath	string	Path to the file relative to the root of a mount.
clips[i].fileSize	integer	Size of file on disk in bytes.
clips[i].codecFormat	object	
clips[i].codecFormat.codec	string	Currently selected codec.
clips[i].codecFormat.container	string	Multimedia container format.
clips[i].videoFormat	object	Video format configuration.
clips[i].videoFormat.name (required)	string	Video format serialised as a string.
clips[i].videoFormat.frameRate	string	Frame rate. Possible values are: 23.98, 24.00, 24, 25.00, 25, 29.97, 30.00, 30, 47.95, 48.00, 48, 50.00, 50, 59.94, 60.00, 60, 119.88, 120.00, 120.
clips[i].videoFormat.height	number	Height dimension of video format.
clips[i].videoFormat.width	number	Width dimension of video format.
clips[i].videoFormat.interlaced	boolean	Is the display format interlaced?
clips[i].startTimecode	string	Start timecode of the clip serialised as string.
clips[i].durationTimecode	string	Duration of the clip in timecode format serialised as string.
clips[i].frameCount	integer	Number of frames in clip; duration of the clip in frames.

404 - There is no active disk.

500 - Internal server error.

Monitoring Control API

API for monitoring and controlling display settings in Blackmagic Design products.

GET /monitoring/display

Retrieve a list of all display names.

Response

200 - Returns a list of display names.

The response is JSON.

Name	Type	Description
displays	array	List of display names available.
displays[i]	string	

GET /monitoring/{displayName}/cleanFeed

Get the clean feed enable state for a specific display.

Parameters

Name	Type	Description
{displayName} (required)	string	Name of the display. Obtainable from /monitoring/display which returns a list of displayNames.

Response

200 - OK

The response is JSON.

Name	Type	Description
enabled (required)	boolean	Indicates if the feature is enabled.

400 - Invalid display name format.

404 - Display name not found.

422 - Unable to retrieve the clean feed state.

PUT /monitoring/{displayName}/cleanFeed

Set the clean feed enable state for a specific display.

Parameters

Name	Type	Description
{displayName} (required)	string	Name of the display. Obtainable from /monitoring/display which returns a list of displayNames.

Name	Type	Description
enabled (required)	boolean	Indicates if the feature is enabled.

Response

204 - Clean feed enabled/disabled successfully.

400 - Invalid input or display name format.

404 - Display name not found.

422 - Failed to set clean feed enable.

GET /monitoring/{displayName}/displayLUT

Get the display LUT enable state for a specific display.

Parameters

Name	Type	Description
{displayName} (required)	string	Name of the display. Obtainable from /monitoring/display which returns a list of displayNames.

Response

200 - OK

The response is JSON.

Name	Type	Description
enabled (required)	boolean	Indicates if the feature is enabled.

400 - Invalid display name format.

404 - Display name not found.

422 - Failed to get display LUT enable state.

PUT /monitoring/{displayName}/displayLUT

Set the display LUT enable state for a specific display.

Parameters

Name	Type	Description
{displayName} (required)	string	Name of the display. Obtainable from /monitoring/display which returns a list of displayNames.

Name	Type	Description
enabled (required)	boolean	Indicates if the feature is enabled.

Response

204 - Display LUT enabled/disabled successfully.

400 - Invalid input or display name format.

404 - Display name not found.

422 - Failed to set display LUT enable.

NEW! GET /monitoring/{displayName}/displayLUTSlot

Get the LUT slot selected for a specific display.

Parameters

Name	Type	Description
{displayName} (required)	string	Name of the display. Obtainable from /monitoring/display which returns a list of displayNames.

Response

200 - OK

The response is JSON.

Name	Type	Description
slot (required)	integer	Index of the LUT slot applied to this display. Bounded by `slotCount` from GET `/luts`.

400 - Invalid display name format.

404 - Display name not found.

422 - Failed to get display LUT slot.

NEW! PUT /monitoring/{displayName}/displayLUTSlot

Set the LUT slot selected for a specific display.

Parameters

Name	Type	Description
{displayName} (required)	string	Name of the display. Obtainable from /monitoring/display which returns a list of displayNames.

Name	Type	Description
slot (required)	integer	Index of the LUT slot applied to this display. Bounded by `slotCount` from GET `/luts`.

Response

204 - Display LUT slot updated successfully.

400 - Invalid input, display name format, or slot index.

404 - Display name not found.

422 - Failed to set display LUT slot.

GET /monitoring/{displayName}/zebra

Get the zebra enable state for a specific display.

Parameters

Name	Type	Description
{displayName} (required)	string	Name of the display. Obtainable from /monitoring/display which returns a list of displayNames.

Response

200 - OK

The response is JSON.

Name	Type	Description
enabled (required)	boolean	Indicates if the feature is enabled.

400 - Invalid display name format.

404 - Display name not found.

422 - Failed to get zebra enable state.

PUT /monitoring/{displayName}/zebra

Set the zebra enable state for a specific display.

Parameters

Name	Type	Description
{displayName} (required)	string	Name of the display. Obtainable from /monitoring/display which returns a list of displayNames.

Name	Type	Description
enabled (required)	boolean	Indicates if the feature is enabled.

Response

204 - Zebra enabled/disabled successfully.

400 - Invalid input or display name format.

404 - Display name not found.

422 - Failed to set zebra enable.

GET /monitoring/zebra

Get the zebra settings.

Response

200 - OK

The response is JSON.

Name	Type	Description
highlight	object	
highlight.level		
highlight.enabled	boolean	True if highlight zebra is enabled.
skinTone	object	
skinTone.type	string	The type of skin tone zebra. Possible values are: None, Blowout Threshold, Middle Grey +1, Middle Grey.
skinTone.enabled	boolean	True if skin tone zebra is enabled.

PUT /monitoring/zebra

Set the zebra settings.

Parameters

Name	Type	Description
highlight	object	
highlight.level		
highlight.enabled	boolean	True if highlight zebra is enabled.
skinTone	object	
skinTone.type	string	The type of skin tone zebra. Possible values are: None, Blowout Threshold, Middle Grey +1, Middle Grey.
skinTone.enabled	boolean	True if skin tone zebra is enabled.

Response

204 - Zebra settings updated successfully.

400 - Invalid zebra settings.

422 - Failed to set zebra settings.

GET /monitoring/{displayName}/focusAssist

Get the focus assist enable state for a specific display.

Parameters

Name	Type	Description
{displayName} (required)	string	Name of the display. Obtainable from /monitoring/display which returns a list of displayNames.

Response

200 - OK

The response is JSON.

Name	Type	Description
enabled (required)	boolean	Indicates if the feature is enabled.

400 - Invalid display name format.

404 - Display name not found.

422 - Failed to get focus assist enable state.

PUT /monitoring/{displayName}/focusAssist

Set the focus assist enable state for a specific display.

Parameters

Name	Type	Description
{displayName} (required)	string	Name of the display. Obtainable from /monitoring/display which returns a list of displayNames.

Name	Type	Description
enabled (required)	boolean	Indicates if the feature is enabled.

Response

204 - Focus assist settings updated successfully.

400 - Invalid input or display name format.

404 - Display name not found.

422 - Failed to set focus assist enable.

GET /monitoring/focusAssist

Get the focus assist settings.

Response

200 - OK

The response is JSON.

Name	Type	Description
mode (required)	string	Mode of focus assist. Possible values are: Peak, ColoredLines.
color (required)	string	Color of the focus assist highlight. Possible values are: Red, Green, Blue, White, Black.
intensity (required)	integer	Intensity of the focus assist highlight (0-100).

PUT /monitoring/focusAssist

Set the focus assist settings.

Parameters

Name	Type	Description
mode (required)	string	Mode of focus assist. Possible values are: Peak, ColoredLines.
color (required)	string	Color of the focus assist highlight. Possible values are: Red, Green, Blue, White, Black.
intensity (required)	integer	Intensity of the focus assist highlight (0-100).

Response

204 - Focus assist settings updated successfully.

400 - Invalid focus assist settings. Intensity must be between 0 and 100.

422 - Failed to set focus assist settings.

GET /monitoring/{displayName}/frameGuide

Get the frame guide enable state for a specific display.

Parameters

Name	Type	Description
{displayName} (required)	string	Name of the display. Obtainable from /monitoring/display which returns a list of displayNames.

Response

200 - Returns the frame guide enable state.

The response is JSON.

Name	Type	Description
enabled (required)	boolean	Indicates if the feature is enabled.

400 - Invalid display name format.

404 - Display not found.

422 - Failed to get frame guide enable state.

PUT /monitoring/{displayName}/frameGuide

Set the frame guide enable state for a specific display.

Parameters

Name	Type	Description
{displayName} (required)	string	Name of the display. Obtainable from /monitoring/display which returns a list of displayNames.

Name	Type	Description
enabled (required)	boolean	Indicates if the feature is enabled.

Response

204 - Frame guide state updated successfully.

400 - Invalid input or display name format.

404 - Display not found.

422 - Failed to set frame guide enable.

GET /monitoring/frameGuideRatio

Get the current frame guide ratio.

Response

200 - Returns the current frame guide ratio.

The response is JSON.

Name	Type	Description
ratio (required)	string	The frame guide ratio in format “width:height”.

422 - Failed to get frame guide ratio.

PUT /monitoring/frameGuideRatio

Set the frame guide ratio.

Parameters

Name	Type	Description
ratio (required)	string	The frame guide ratio in format “width:height”.

Response

204 - Frame guide ratio updated successfully.

400 - Invalid frame guide ratio.

422 - Failed to set frame guide ratio.

GET /monitoring/frameGuideRatio/presets

Get the presets for frame guide ratios.

Response

200 - Returns a list of preset frame guide ratios.

The response is JSON.

Name	Type	Description
presets	array	
presets[i]	string	A frame guide ratio.

GET /monitoring/{displayName}/frameGrids

Get the frame grids enable state for a specific display.

Parameters

Name	Type	Description
{displayName} (required)	string	Name of the display. Obtainable from /monitoring/display which returns a list of displayNames.

Response

200 - Returns the frame grids enable state.

The response is JSON.

Name	Type	Description
enabled (required)	boolean	Indicates if the feature is enabled.

400 - Invalid display name format.

404 - Display not found.

422 - Failed to get frame grids enable state.

PUT /monitoring/{displayName}/frameGrids

Set the frame grids enable state for a specific display.

Parameters

Name	Type	Description
{displayName} (required)	string	Name of the display. Obtainable from /monitoring/display which returns a list of displayNames.

Name	Type	Description
enabled (required)	boolean	Indicates if the feature is enabled.

Response

204 - Frame grids state updated successfully.

400 - Invalid input or display name format.

404 - Display not found.

422 - Failed to set frame grids enable.

GET /monitoring/frameGrids

Get the global frame grids settings.

Response

200 - Returns the current frame grids settings.

The response is JSON.

Name	Type	Description
frameGrids (required)	array	List of frame grids enabled. At most 2 can be active, and if 2 are active, one must be “Thirds”.
frameGrids[i]	string	Possible values are: Thirds, Crosshair, Dot, Horizon.

PUT /monitoring/frameGrids

Set the global frame grids settings.

Parameters

Name	Type	Description
frameGrids (required)	array	List of frame grids enabled. At most 2 can be active, and if 2 are active, one must be “Thirds”.
frameGrids[i]	string	Possible values are: Thirds, Crosshair, Dot, Horizon.

Response

204 - Frame grids settings updated successfully.

400 - Invalid input. Must select at most 2 frame grids, one of which must be Thirds if two are selected.

422 - Failed to set frame grids.

GET /monitoring/{displayName}/safeArea

Get the safe area enable state for a specific display.

Parameters

Name	Type	Description
{displayName} (required)	string	Name of the display. Obtainable from /monitoring/display which returns a list of displayNames.

Response

200 - Returns the safe area enable state.

The response is JSON.

Name	Type	Description
enabled (required)	boolean	Indicates if the feature is enabled.

400 - Invalid display name format.

404 - Display not found.

422 - Failed to get safe area enable state.

501 - Safe area feature not supported on this product.

PUT /monitoring/{displayName}/safeArea

Set the safe area enable state for a specific display.

Parameters

Name	Type	Description
{displayName} (required)	string	Name of the display. Obtainable from /monitoring/display which returns a list of displayNames.

Name	Type	Description
enabled (required)	boolean	Indicates if the feature is enabled.

Response

204 - Safe area state updated successfully.

400 - Invalid input or display name format.

404 - Display not found.

422 - Failed to set safe area enable.

501 - Safe area feature not supported on this product.

GET /monitoring/safeAreaPercent

Get the current safe area percentage.

Response

200 - Returns the current safe area percentage.

The response is JSON.

Name	Type	Description
percent	integer	Safe area coverage percentage.

422 - Failed to get safe area percentage.

501 - Safe area feature not supported on this product.

PUT /monitoring/safeAreaPercent

Set the safe area percentage.

Parameters

Name	Type	Description
percent (required)	integer	Safe area coverage percentage to set (0-100).

Response

204 - Safe area percentage updated successfully.

400 - Invalid percentage value. Must be between 0 and 100.

422 - Failed to set safe area percentage.

501 - Safe area feature not supported on this product.

GET /monitoring/{displayName}/falseColor

Get the false color enable state for a specific display.

Parameters

Name	Type	Description
{displayName} (required)	string	Name of the display. Obtainable from /monitoring/display which returns a list of displayNames.

Response

200 - Returns the false color enable state.

The response is JSON.

Name	Type	Description
enabled (required)	boolean	Indicates if the feature is enabled.

400 - Invalid display name format.

404 - Display not found.

422 - Failed to get false color enable state.

PUT /monitoring/{displayName}/falseColor

Set the false color enable state for a specific display.

Parameters

Name	Type	Description
{displayName} (required)	string	Name of the display. Obtainable from /monitoring/display which returns a list of displayNames.

Name	Type	Description
enabled (required)	boolean	Indicates if the feature is enabled.

Response

204 - False color state updated successfully.

400 - Invalid input or display name format.

404 - Display not found.

422 - Failed to set false color enable.

GET /monitoring/{displayName}/brightness

Get the brightness level for a specific display.

Parameters

Name	Type	Description
{displayName} (required)	string	Name of the display. Obtainable from /monitoring/display which returns a list of displayNames.

Response

200 - Returns the brightness level.

The response is JSON.

Name	Type	Description
brightness	integer	Brightness level (0-100).
adjustable	boolean	Indicates if brightness is adjustable for this display.

400 - Invalid display name format.

404 - Display not found or not available on this product.

PUT /monitoring/{displayName}/brightness

Set the brightness level for a specific display.

Parameters

Name	Type	Description
{displayName} (required)	string	Name of the display. Obtainable from /monitoring/display which returns a list of displayNames.

Name	Type	Description
brightness (required)	integer	Brightness level (0-100)

Response

204 - Brightness updated successfully.

400 - Invalid input, display name format, or brightness not adjustable for this display.

404 - Display not found or not available on this product.

Event Control API

API For working with built-in websocket.

GET /event/list

Get the list of events that can be subscribed to using the websocket API.

Response

200 - Websocket API events list.

The response is JSON.

Name	Type	Description
	array	List of events that can be subscribed to using the websocket API.
[i]	string	

System Control API

API for controlling the System Modes on Blackmagic Design products.

GET /system

Get device system information.

Response

200 - System summary.

The response is JSON.

The properties will be populated only with the values that are supported/implemented by the device in use.

Name	Type	Description
codecFormat	object	Codec format configuration.
codecFormat.codec	string	Codec serialised as string.
codecFormat.container	string	Multimedia container format.
videoFormat	object	Video format configuration.
videoFormat.name (required)	string	Video format serialised as a string.
videoFormat.frameRate	string	Frame rate. Possible values are: 23.98, 24.00, 24, 25.00, 25, 29.97, 30.00, 30, 47.95, 48.00, 48, 50.00, 50, 59.94, 60.00, 60, 119.88, 120.00, 120.
videoFormat.height	number	Height dimension of video format.
videoFormat.width	number	Width dimension of video format.
videoFormat.interlaced	boolean	Is the display format interlaced?

204 - System information not available.

501 - This functionality is not implemented for the device in use.

GET /system/product

Get device product information.

Response

200 - Device product information.

The response is JSON.

Product information.

Name	Type	Description
deviceName	string	Name of device as displayed in Setup.
productName	string	Device's product name.
softwareVersion	string	Software version running on device.

501 - This functionality is not implemented for the device in use.

GET /system/supportedCodecFormats

Get the list of supported codecs.

Response

200 - List of supported codec formats.

The response is JSON.

Name	Type	Description
codecFormats	array	
codecFormats[i]	object	Codec format configuration.
codecFormats[i].codec	string	Codec serialised as string.
codecFormats[i].container	string	Multimedia container format.

501 - This functionality is not implemented for the device in use.

GET /system/codecFormat

Get the currently selected codec.

Response

200 - Current codec format.

The response is JSON.

Codec format configuration.

Name	Type	Description
codec	string	Codec serialised as string.
container	string	Multimedia container format.

501 - This functionality is not implemented for the device in use.

PUT /system/codecFormat

Update the system codec.

Parameters

Codec format configuration.

Name	Type	Description
codec	string	Codec serialised as string.
container	string	Multimedia container format.

Response

204 - The codec updated successfully.

400 - The specified codec format is unsupported or invalid.

501 - This functionality is not implemented for the device in use.

GET /system/videoFormat

Get the currently selected video format.

Response

200 - Current system video format.

The response is JSON.

Video format configuration.

Name	Type	Description
name (required)	string	Video format serialised as a string.
frameRate	string	Frame rate. Possible values are: 23.98, 24.00, 24, 25.00, 25, 29.97, 30.00, 30, 47.95, 48.00, 48, 50.00, 50, 59.94, 60.00, 60, 119.88, 120.00, 120.
height	number	Height dimension of video format.
width	number	Width dimension of video format.
interlaced	boolean	Is the display format interlaced?

501 - This functionality is not implemented for the device in use.

PUT /system/videoFormat

Set the system video format.

Parameters

This parameter can be one of the following types:

Name	Type	Description
name (required)	string	Video format serialised as a string.

Name	Type	Description
frameRate (required)	string	Frame rate. Possible values are: 23.98, 24.00, 24, 25.00, 25, 29.97, 30.00, 30, 47.95, 48.00, 48, 50.00, 50, 59.94, 60.00, 60, 119.88, 120.00, 120.
height (required)	number	Height dimension of video format.
width (required)	number	Width dimension of video format.
interlaced	boolean	Is the display format interlaced?

Response

204 - The video format updated successfully.

400 - Invalid request or unsupported format.

409 - Operation unsupported in the current state.

501 - This functionality is not implemented for the device in use.

GET /system/supportedVideoFormats

Get the list of supported video formats for the current system state.

Response

200 - List of supported video formats.

The response is JSON.

List of supported video formats.

Name	Type	Description
videoFormats	array	List of video formats.
videoFormats[i]	string	Video format serialised as string.

501 - This functionality is not implemented for the device in use.

GET /system/supportedFormats

Get supported formats.

Response

200 - List of supported formats.

The response is JSON.

Name	Type	Description
supportedFormats	array	
supportedFormats[i]	object	
supportedFormats[i]. recordResolution	object	
supportedFormats[i]. recordResolution.height	number	Height of the resolution.
supportedFormats[i]. recordResolution.width	number	Width of the resolution.
supportedFormats[i]. sensorResolution	object	
supportedFormats[i]. sensorResolution.height	number	Height of the resolution.
supportedFormats[i]. sensorResolution.width	number	Width of the resolution.
supportedFormats[i].codecs	array	
supportedFormats[i].codecs[i]	string	
supportedFormats[i].frameRates	array	
supportedFormats[i].frameRates[i]	string	Frame rate. Possible values are: 23.98, 24.00, 24, 25.00, 25, 29.97, 30.00, 30, 47.95, 48.00, 48, 50.00, 50, 59.94, 60.00, 60, 119.88, 120.00, 120.
supportedFormats[i]. minOffSpeedFrameRate	number	
supportedFormats[i]. maxOffSpeedFrameRate	number	
supportedFormats[i]. resolutionDescriptor	object	
supportedFormats[i]. resolutionDescriptor.group	string	Resolution group for UI display.

Name	Type	Description
supportedFormats[i]. resolutionDescriptor.aspectRatio	string	Aspect ratio of the resolution.
supportedFormats[i]. resolutionDescriptor.description	string	Human-readable description of the resolution.
supportedFormats[i]. resolutionDescriptor.sensorArea	string	Area of the sensor used for this resolution.

501 - This functionality is not implemented for the device in use.

GET /system/format

Get current format.

Response

200 - Current format.

The response is JSON.

Name	Type	Description
codec	string	Codec format serialised as a string.
frameRate	string	Frame rate. Possible values are: 23.98, 24.00, 24, 25.00, 25, 29.97, 30.00, 30, 47.95, 48.00, 48, 50.00, 50, 59.94, 60.00, 60, 119.88, 120.00, 120.
maxOffSpeedFrameRate	number	
minOffSpeedFrameRate	number	
offSpeedEnabled	boolean	
offSpeedFrameRate	number	
recordResolution	object	
recordResolution.height	number	Height of the resolution.
recordResolution.width	number	Width of the resolution.
sensorResolution	object	
sensorResolution.height	number	Height of the resolution.
sensorResolution.width	number	Width of the resolution.
resolutionDescriptor	object	
resolutionDescriptor.group	string	Resolution group for UI display.
resolutionDescriptor.aspectRatio	string	Aspect ratio of the resolution.
resolutionDescriptor.description	string	Human-readable description of the resolution.
resolutionDescriptor.sensorArea	string	Area of the sensor used for this resolution.

501 - This functionality is not implemented for the device in use.

PUT /system/format

Set the format.

Parameters

Format update request. While fields are technically optional in the request, the system requires a complete valid format combination for successful update.

Name	Type	Description
codec	string	Codec format serialised as a string.
frameRate	string	Frame rate. Possible values are: 23.98, 24.00, 24, 25.00, 25, 29.97, 30.00, 30, 47.95, 48.00, 48, 50.00, 50, 59.94, 60.00, 60, 119.88, 120.00, 120.
offSpeedEnabled	boolean	Enable or disable off-speed recording.
offSpeedFrameRate	number	Frame rate for off-speed recording (must be within min/max range).
recordResolution	object	
recordResolution.height	number	Height of the resolution.
recordResolution.width	number	Width of the resolution.
sensorResolution	object	
sensorResolution.height	number	Height of the resolution.
sensorResolution.width	number	Width of the resolution.

Response

204 - System format updated.

400 - Format is not supported.

501 - This functionality is not implemented for the device in use.

GET /system/dynamicRange

Get current dynamic range.

Response

200 - Current dynamic range.

The response is JSON.

Current dynamic range.

Name	Type	Description
dynamicRange	string	Dynamic range setting. Possible values are: Video, Film, Extended Video, PQ, HLG, DaVinci.

501 - Not implemented for this device (use /system/colorScience instead).

PUT /system/dynamicRange

Set the dynamic range.

Parameters

Dynamic range update request.

Name	Type	Description
dynamicRange (required)	string	Dynamic range setting. Possible values are: Video, Film, Extended Video, PQ, HLG, DaVinci.

Response

204 - Dynamic range updated successfully.

400 - Invalid or unsupported dynamic range.

501 - Not implemented for this device (use /system/colorScience instead).

GET /system/supportedDynamicRanges

Get supported dynamic ranges.

Response

200 - List of supported dynamic ranges.

The response is JSON.

List of supported dynamic ranges.

Name	Type	Description
supportedDynamicRanges	array	
supportedDynamicRanges[i]	string	Dynamic range setting. Possible values are: Video, Film, Extended Video, PQ, HLG, DaVinci.

501 - Not implemented for this device (use /system/supportedColorSciences instead).

NEW!

GET /system/colorScience

Get current colour science generation.

Response

200 - Current colour science generation.

The response is JSON.

Current colour science generation.

Name	Type	Description
colorScience	string	Colour science generation setting. Possible values are: Gen5, Gen6.

501 - Not implemented for this device (use /system/dynamicRange instead).

NEW!

PUT /system/colorScience

Set the colour science generation.

Parameters

Colour science generation update request.

Name	Type	Description
colorScience (required)	string	Colour science generation setting. Possible values are: Gen5, Gen6.

Response

204 - Colour science generation updated successfully.

400 - Invalid or unsupported colour science generation.

501 - Not implemented for this device (use /system/dynamicRange instead).

NEW!

GET /system/supportedColorSciences

Get supported colour science generations.

Response

200 - List of supported colour science generations.

The response is JSON.

List of supported colour science generations.

Name	Type	Description
supportedColorSciences	array	
supportedColorSciences[i]	string	Colour science generation setting. Possible values are: Gen5, Gen6.

501 - Not implemented for this device (use /system/supportedDynamicRanges instead).

Transport Control API

API for controlling Transport on Blackmagic Design products.

GET /transports/0

Get device's basic transport status.

Response

200 - Transport status.

The response is JSON.

Name	Type	Description
mode	string	Transport mode. Possible values are: InputPreview, InputRecord, Output.

PUT /transports/0

Set device's basic transport status.

Parameters

Name	Type	Description
mode (required)	string	Transport mode. Possible values are: InputPreview, Output.

Response

204 - Transport mode was set.

400 - Failed to set transport mode or invalid state.

500 - Internal server error.

GET /transports/0/stop

Determine if transport is stopped.

Response

200 - Transport stop response.

The response is JSON.

Name	Type	Description
	boolean	True when transport mode is InputPreview or when in Output mode and speed is 0.

PUT /transports/0/stop

Stop transport (DEPRECATED).

Response

204 - Transport stopped.

500 - Internal server error.

POST /transports/0/stop

Stop transport.

Response

204 - Transport stopped.

500 - Internal server error.

GET /transports/0/play

Determine if transport is playing.

Response

200 - Transport play response.

The response is JSON.

Name	Type	Description
	boolean	True when transport is in Output mode and speed is non-zero.

PUT /transports/0/play

Start playing on transport (DEPRECATED).

Response

204 - Transport playing.

400 - Failed to set transport to play.

500 - Internal server error.

POST /transports/0/play

Start playing on transport.

Response

204 - Transport playing.

400 - Failed to set transport to play.

500 - Internal server error.

GET /transports/0/playback

Get playback state.

Response

200 - Transport playback state.

The response is JSON.

Name	Type	Description
type	string	Possible values are: Play, Jog, Shuttle, Var.
loop	boolean	When true, playback loops from the end of the timeline to the beginning of the timeline.
singleClip	boolean	When true, playback loops from the end of the current clip to the beginning of the current clip.
speed	number	Playback speed, 1.0 for normal forward playback.
position	integer	Playback position on the timeline in units of video frames, where 0 is the first frame of the timeline.

PUT /transports/0/playback

Set playback state.

Parameters

Name	Type	Description
type	string	Possible values are: Play, Jog, Shuttle, Var.
loop	boolean	When true, playback loops from the end of the timeline to the beginning of the timeline.
singleClip	boolean	When true, playback loops from the end of the current clip to the beginning of the current clip.
speed	number	Playback speed, 1.0 for normal forward playback.
position	integer	Playback position on the timeline in units of video frames, where 0 is the first frame of the timeline.

Response

204 - Updated transport playback state.

400 - Failed to set transport playback state.

500 - Internal server error.

GET /transports/0/record

Get record state.

Response

200 - Recording state.

The response is JSON.

Name	Type	Description
recording	boolean	If true, transport is in InputRecord mode.

PUT /transports/0/record

Set record state (DEPRECATED).

Parameters

Name	Type	Description
recording (required)	boolean	If true, starts a recording, otherwise stops.
clipName	string	Optional, sets the requested clip name to record to, when “recording” attribute is set to true.

Response

204 - Recording state updated.

400 - Failed to update recording state.

500 - Internal server error.

POST /transports/0/record

Start recording.

Parameters

Name	Type	Description
clipName	string	Optional, provides a specific name of clip to record to.

Response

204 - Recording started.

400 - Failed to start recording.

500 - Internal server error.

GET /transports/0/clipIndex

Get the clip index of the currently playing clip on the timeline.

Response

200 - Clip index response.

The response is JSON.

Name	Type	Description
clipIndex	integer | null	The 0-based index of the clip being played on the timeline. null when there is no timeline or an empty timeline.

GET /transports/0/timecode

Get device timecode.

Response

200 - Timecode response.

The response is JSON.

Name	Type	Description
display	string	The display timecode serialised as a string.
timeline	string	The timeline timecode serialised as a string.

GET /transports/0/timecode/source

Get timecode source selected on device.

Response

200 - Timecode source response.

The response is JSON.

Name	Type	Description
source	string	Selected timecode source. Possible values are: Timeline, Clip.
timecodeInputSource	string	Selected timecode input source. Possible values are: Internal, Embedded, External, TimeOfDay, Preset, LastClip, Unknown.

POST /transports/0/doStillCapture

Capture a still image.

Response

204 - Still capture initiated successfully.

404 - The device does not support still capture.

500 - Failed to capture still. The error message will provide more detail.

GET /transports/0/prerecord

Get current prerecord status.

Response

200 - Prerecord status.

The response is JSON.

Name	Type	Description
prerecording	boolean	True when prerecording is currently active (either from auto mode or one-shot trigger).
duration	integer	The elapsed duration of the active prerecord buffer in seconds. Returns 0 when not prerecording.

404 - The device does not support prerecord.

POST /transports/0/prerecord

Trigger one-shot prerecord.

Response

204 - One-shot prerecord triggered successfully.

404 - The device does not support prerecord.

500 - Failed to trigger prerecord.

GET /transports/0/prerecord/auto

Get auto prerecord configuration.

Response

200 - Auto prerecord configuration.

The response is JSON.

Name	Type	Description
autoEnabled (required)	boolean	Enable or disable automatic prerecord mode. When enabled, prerecord automatically activates when the device is ready.

404 - The device does not support prerecord.

PUT /transports/0/prerecord/auto

Set auto prerecord configuration.

Parameters

Name	Type	Description
autoEnabled (required)	boolean	Enable or disable automatic prerecord mode. When enabled, prerecord automatically activates when the device is ready.

Response

204 - Auto prerecord configuration updated successfully.

400 - Invalid request body.

404 - The device does not support prerecord.

500 - Failed to set auto prerecord configuration.

GET /transports/0/prerecord/maxDuration

Get maximum prerecord duration.

Response

200 - Maximum prerecord duration.

The response is JSON.

Name	Type	Description
maxDuration (required)	integer	Maximum prerecord duration in seconds. Must be one of the values returned by /transports/0/prerecord/supportedMaxDurations.

404 - The device does not support prerecord.

PUT /transports/0/prerecord/maxDuration

Set maximum prerecord duration.

Parameters

Name	Type	Description
maxDuration (required)	integer	Maximum prerecord duration in seconds. Must be one of the values returned by /transports/0/prerecord/supportedMaxDurations.

Response

204 - Maximum prerecord duration updated successfully.

400 - Invalid maxDuration value. Must be one of the supported durations.

404 - The device does not support prerecord.

500 - Failed to set maximum prerecord duration.

GET /transports/0/prerecord/supportedMaxDurations

Get supported maximum prerecord durations.

Response

200 - Array of supported maximum prerecord durations in seconds.

The response is JSON.

Name	Type	Description
	array	
[i]	integer	Duration in seconds.

404 - The device does not support prerecord.

GET /transports/0/proxyRecording

Get proxy recording configuration.

Response

200 - Proxy recording configuration.

The response is JSON.

Name	Type	Description
enabled (required)	boolean	Enable or disable proxy recording.

404 - The device does not support proxy recording.

PUT /transports/0/proxyRecording

Set proxy recording configuration.

Parameters

Name	Type	Description
enabled (required)	boolean	Enable or disable proxy recording.

Response

204 - Proxy recording configuration updated successfully.

400 - Invalid request body.

404 - The device does not support proxy recording.

500 - Failed to set proxy recording configuration.

Timeline Control API

API for controlling playback timeline.

GET /timelines/0

Get the playback timeline.

Response

200 - Playback timeline.

The response is JSON.

Name	Type	Description
clips	array	
clips[i]	object	Timeline clip.
clips[i].clipUniqueId (required)	integer	Unique identifier used to identify this media clip. If the same media clip is added to the timeline multiple times, each timeline clip has the same clipUniqueId
clips[i].frameCount	integer	Duration of timeline clip in frames, the number of frames in this clip on the timeline.
clips[i].durationTimecode	string	Duration of the timeline clip in timecode format serialised as string. This will differ to durationTimecode reported in /clips for this clipUniqueId if clipIn or frameCount was specified when adding this clip to the timeline.
clips[i].clipIn	integer	In frame offset for the clip on the timeline, where 0 is the first frame of the on-disk clip.
clips[i].inTimecode	string	Clip timecode of the first frame of this timeline clip serialised as string (clip startTimecode + clipIn frames).
clips[i].timelineIn	integer	Timeline position of the first frame of this clip, where 0 is the first frame of the timeline.
clips[i].timelineInTimecode	string	Timeline timecode of the first frame of this timeline clip serialised as string.

404 - No timeline / disk available.

DELETE /timelines/0

Clear the current playback timeline. Deprecated, prefer to use POST `/timelines/0/clear`

Response

204 - The timeline was cleared.

501 - The operation is not supported on this device.

POST /timelines/0

Add a clip to the timeline.

Parameters

This parameter can be one of the following types:

Add multiple media clips to the timeline with optional insertion point and clip in/out points.

Name	Type	Description
insertBefore	integer	Clip(s) will be inserted before the clip at this timeline clip index, where 0 inserts to the beginning of the timeline. If omitted, inserts to the end of the timeline.
clips (required)	array	List of clips to add to the timeline.
clips[i]	object	Clip to add to the timeline, optionally cropping the clip before adding to the timeline.
clips[i].clipUniqueId (required)	integer	Unique ID (clipUniqueId) of the media clip to add to the timeline.
clips[i].clipIn	integer	Insert this clip starting from this frame within the media clip. If omitted, starts from the beginning of the clip -- frame 0.
clips[i].frameCount	integer	Number of frames of this clip to add to the timeline. If omitted, use the whole clip, or the rest of the clip if clipIn was specified.

Add multiple media clips to the timeline with optional insertion point.

Name	Type	Description
insertBefore	integer	Clip(s) will be inserted before the clip at this timeline clip index, where 0 inserts to the beginning of the timeline. If omitted, inserts to the end of the timeline.
clips (required)	array	List of clips to add to the timeline.
clips[i]	integer	Unique ID (clipUniqueId) of the media clip to add to the timeline.

Add a single clip to the timeline with optional insertion point and clip in/out points.

Name	Type	Description
insertBefore	integer	Clip(s) will be inserted before the clip at this timeline clip index, where 0 inserts to the beginning of the timeline. If omitted, inserts to the end of the timeline.
clips (required)	object	Clip to add to the timeline, optionally cropping the clip before adding to the timeline.
clips.clipUniqueId (required)	integer	Unique ID (clipUniqueId) of the media clip to add to the timeline.
clips.clipIn	integer	Insert this clip starting from this frame within the media clip. If omitted, starts from the beginning of the clip -- frame 0.
clips.frameCount	integer	Number of frames of this clip to add to the timeline. If omitted, use the whole clip, or the rest of the clip if clipIn was specified.

Add a single clip to the timeline with optional insertion point.

Name	Type	Description
insertBefore	integer	Clip(s) will be inserted before the clip at this timeline clip index, where 0 inserts to the beginning of the timeline. If omitted, inserts to the end of the timeline.
clips (required)	integer	Unique ID (clipUniqueId) of the media clip to add to the timeline.

Response

204 - The clip was added to the timeline as specified.

501 - The operation is not supported on this device.

POST /timelines/0/add

Add a clip to the end of the timeline. Deprecated, use POST `/timelines/0` to add clips within the timeline.

Parameters

This parameter can be one of the following types:

Add one clip to the end of the timeline.

Name	Type	Description
clips	integer	Unique ID (clipUniqueId) of the media clip to add to the timeline.

Add many clips to the end of the timeline.

Name	Type	Description
clips	array	List of clipUniqueIds of clips to add to end of timeline.
clips[i]	integer	Unique ID (clipUniqueId) of the media clip to add to the timeline.

Response

204 - The clip was added to the end of the timeline.

501 - The operation is not supported on this device.

POST /timelines/0/clear

Clear the playback timeline.

Response

204 - The timeline was cleared.

501 - The operation is not supported on this device.

DELETE /timelines/0/clips/{timelineClipIndex}

Remove the specified clip from the timeline.

Parameters

Name	Type	Description
{timelineClipIndex} (required)	integer	The (0-based) timeline clip index of the clip to remove from the timeline.

Response

204 - The specified clip was removed from the timeline.

501 - The operation is not supported on this device.

GET /timelines/0/selection

Get the current timeline selection.

Response

200 - Current timeline selection.

The response is JSON.

Timeline selection containing an array of clip IDs.

Name	Type	Description
clipIds	array	Array of clip IDs (clipUniqueId) currently selected for the remote selection timeline. A clip ID can be included multiple times. Empty array indicates there is no selection.
clipIds[i]	integer	Clip unique ID to include in selection.

404 - No timeline / disk available.

PUT /timelines/0/selection

Set the timeline selection.

Parameters

Timeline selection containing an array of clip IDs.

Name	Type	Description
clipIds	array	Array of clip IDs (clipUniqueId) currently selected for the remote selection timeline. A clip ID can be included multiple times. Empty array indicates there is no selection.
clipIds[i]	integer	Clip unique ID to include in selection.

Response

204 - Timeline selection was set successfully.

400 - Invalid clip ID provided or failed to set selection.

501 - The operation is not supported on this device.

DELETE /timelines/0/selection

Clear the timeline selection.

Response

204 - Timeline selection was cleared successfully.

400 - Failed to clear selection.

501 - The operation is not supported on this device.

Media Control API

API for controlling media devices in Blackmagic Design products.

GET /media/workingset

Get the list of media devices currently in the working set.

Response

200 - The list of media devices in the working set.

The response is JSON.

Name	Type	Description
size	integer	The fixed size of this device's working set.
workingset	array	The device's working set.
workingset[i]	object | null	Device within the working set. null if no device is present within the given working set slot.
workingset[i].index	integer	The index of this device in the working set.
workingset[i].activeDisk	boolean	True if this disk is currently active for recording.
workingset[i].volume	string	Volume name.
workingset[i].deviceName	string	Internal device name of this media device.
workingset[i].remainingRecordTime	integer	Remaining record time using current codec and video format in seconds.
workingset[i].totalSpace	integer	Total space on media device in bytes.
workingset[i].remainingSpace	integer	Remaining space on media device in bytes.
workingset[i].clipCount	integer	Number of clips currently on the device.

GET /media/slots

Get information about all available media slots.

Response

200 - Information about all media slots.

The response is JSON.

Name	Type	Description
	array	Information about all available media slots.
[i]	object	
[i].index	integer	The index of this slot in the device.
[i].type	string	The type of media slot. Possible values are: USB, SDCard, CFX, SSD, CFast, EmptyModule, MediaModule, NetworkShare, InternalDrive, Invalid.

GET /media/active

Get the currently active media device.

Response

200 - The current active media device.

The response is JSON.

The active media device, or null if there is no active media.

Name	Type	Description
workingsetIndex	integer	Working set index of the active media device.
deviceName	string	Device name of media device.

204 - No media is currently active.

PUT /media/active

Set the currently active media device.

Parameters

Name	Type	Description
workingsetIndex (required)	integer	Working set index of the media to make active.

Response

204 - The active media device was set successfully.

400 - Setting the currently active media device is not possible in the current state. The device may be blocked or not found.

500 - Internal server error occurred while setting the active device.

GET /media/devices/doformatSupportedFilesystems

Get the list of filesystems available to format a media device.

Response

200 - The list of filesystems permitted for formatting.

The response is JSON.

Name	Type	Description
	array	List of filesystems permitted for formatting media.
[i]	string	Filesystem serialised as string.

GET /media/devices/{deviceName}

Get information about a requested device.

Parameters

Name	Type	Description
{deviceName} (required)	string	Device name of the media device. Retrieved by “deviceName” member of GET /media/workingset or GET /media/active.

Response

200 - Information about the requested device.

The response is JSON.

Media device state.

Name	Type	Description
state	string	The current state of the media device. Possible values are: None, Scanning, Mounted, Unmounted, Uninitialised, Formatting, RaidComponent.

400 - Invalid device name.

404 - Device not found.

GET /media/devices/{deviceName}/doformat

Get a format key, used to format the device with a PUT request.

Parameters

Name	Type	Description
{deviceName} (required)	string	Device name of the media device. Retrieved by “deviceName” member of GET /media/workingset or GET /media/active.

Response

200 - Format prepared.

The response is JSON.

Name	Type	Description
deviceName	string	Device name of media device to format.
key	string	The key required to format this device, provide to PUT /media/devices/{deviceName}/doformat to perform format of media device.

400 - Cannot format the device. Device may not be in a valid state for formatting or is a network drive that cannot be formatted.

404 - Device not found.

PUT /media/devices/{deviceName}/doformat

Perform a format of the specified media device.

Parameters

Name	Type	Description
{deviceName} (required)	string	Device name of the media device. Retrieved by “deviceName” member of GET /media/workingset or GET /media/active.

Name	Type	Description
key (required)	string	The key used to format this device, retrieved from prepare format media request GET /media/devices/{deviceName}/doformat. Format key provided cannot be reused after successful format.
filesystem (required)	string	Filesystem to format to. Supported filesystems can be retrieved with GET /media/devices/doFormatSupportedFilesystems.
volume (required)	string	Volume name to set for the disk after format.

Response

204 - Format successful.

400 - Cannot format the device, invalid filesystem or key.

404 - Device not found.

Cloud Control API

API to manage Blackmagic Cloud projects and clip uploads.

GET /cloud/projects

List all projects.

Response

200 - Successfully retrieved the list of all projects.

The response is JSON.

Name	Type	Description
	array	
[i]	object	
[i].projectID	integer	Unique identifier of the Blackmagic Cloud project.
[i].libraryID	string	Cloud ID of the library containing this project.
[i].name	string	Name of the project.
[i].private	boolean	True if the project is private.
[i].shared	boolean	True if the project is shared.
[i].clips	array	List of clips associated with the project.
[i].clips[i]	string	
[i].status	object	
[i].status.numClipsRequested	integer	Number of clips requested for upload.
[i].status.numClipsComplete	integer	Number of clips that have completed uploading.

Name	Type	Description
[i].status.uploadPercent	integer	Percentage of upload completion.
[i].status.numClipsPaused	integer	Number of clips paused in upload queue.
[i].status.outOfSpace	boolean	True if the project has run out of space in the cloud.
[i].status.secsRemaining	integer	Estimated seconds remaining until upload is completed. Value of -1 means calculation in progress.
[i].status.currentByteRate	integer	Current byte rate of the upload process.

204 - No projects available.

GET /cloud/projects/active

Retrieve data of the active project.

Response

200 - Successfully retrieved the active project's data.

The response is JSON.

Name	Type	Description
projectID	integer	Unique identifier of the Blackmagic Cloud project.
libraryID	string	Cloud ID of the library containing this project.
name	string	Name of the project.
private	boolean	True if the project is private.
shared	boolean	True if the project is shared.
clips	array	List of clips associated with the project.
clips[i]	string	
status	object	
status.numClipsRequested	integer	Number of clips requested for upload.
status.numClipsComplete	integer	Number of clips that have completed uploading.
status.uploadPercent	integer	Percentage of upload completion.
status.numClipsPaused	integer	Number of clips paused in upload queue.
status.outOfSpace	boolean	True if the project has run out of space in the cloud.
status.secsRemaining	integer	Estimated seconds remaining until upload is completed. Value of -1 means calculation in progress.
status.currentByteRate	integer	Current byte rate of the upload process.

404 - No active project.

GET /cloud/projects/{projectID}

Retrieve specific project data by project ID.

Parameters

Name	Type	Description
{projectID} (required)	integer	Unique identifier of the Blackmagic Cloud project.

Response

200 - Successfully retrieved the project data.

The response is JSON.

Name	Type	Description
projectID	integer	Unique identifier of the Blackmagic Cloud project.
libraryID	string	Cloud ID of the library containing this project.
name	string	Name of the project.
private	boolean	True if the project is private.
shared	boolean	True if the project is shared.
clips	array	List of clips associated with the project.
clips[i]	string	
status	object	
status.numClipsRequested	integer	Number of clips requested for upload.
status.numClipsComplete	integer	Number of clips that have completed uploading.
status.uploadPercent	integer	Percentage of upload completion.
status.numClipsPaused	integer	Number of clips paused in upload queue.
status.outOfSpace	boolean	True if the project has run out of space in the cloud.
status.secsRemaining	integer	Estimated seconds remaining until upload is completed. Value of -1 means calculation in progress.
status.currentByteRate	integer	Current byte rate of the upload process.

404 - Project not found.

GET /cloud/clips

List all clips available for upload.

Response

200 - Successfully retrieved the list of all clips.

The response is JSON.

Name	Type	Description
	array	
[i]	string	REST path to the clip (deviceName/path).

204 - No clips available.

GET /cloud/clips/activeUploading

Retrieve data of actively uploading clips.

Response

200 - Successfully retrieved the list of actively uploading clips.

The response is JSON.

Name	Type	Description
	array	
[i]	object	
[i].path	string	REST path to the clip (deviceName/path).
[i].projectID	integer	ID of the project this clip is associated with.
[i].status	object	
[i].status.projectID	integer	ID of the project this status is for.
[i].status.outOfSpace	boolean	True if the project has run out of space in the cloud.
[i].status.growingFile	boolean	True if the clip is still being recorded/modified.
[i].status.originalUploadState	string	Upload state of the original clip. Possible values are: Unqueued, Paused, Queued, Uploading, Uploaded, Failed, Unknown.
[i].status.proxyUploadState	string	Upload state of the proxy clip. Possible values are: Unqueued, Paused, Queued, Uploading, Uploaded, Failed, Unknown.
[i].status.originalClipTotalSize	integer	Total size of the original clip in bytes.
[i].status.proxyClipTotalSize	integer	Total size of the proxy clip in bytes.
[i].status.originalClipCompletedSize	integer	Completed upload size of the original clip in bytes.
[i].status.proxyClipCompletedSize	integer	Completed upload size of the proxy clip in bytes.
[i].status.secsRemaining	integer	Estimated seconds remaining until upload is completed. Value of -1 means calculation in progress.

204 - No clips are currently being uploaded.

GET /cloud/clips/{deviceName}/{path}

Retrieve upload status for a specific clip.

Parameters

Name	Type	Description
{deviceName} (required)	string	Name of the device where the clip is stored.
{path} (required)	string	Path to the clip.

Response

200 - Successfully retrieved the clip upload status for all associated projects.

The response is JSON.

Name	Type	Description
	array	
[i]	object	
[i].path	string	REST path to the clip (deviceName/path).
[i].projectID	integer	ID of the project this clip is associated with.

Name	Type	Description
[i].status	object	
[i].status.projectID	integer	ID of the project this status is for.
[i].status.outOfSpace	boolean	True if the project has run out of space in the cloud.
[i].status.growingFile	boolean	True if the clip is still being recorded/modified.
[i].status.originalUploadState	string	Upload state of the original clip. Possible values are: Unqueued, Paused, Queued, Uploading, Uploaded, Failed, Unknown.
[i].status.proxyUploadState	string	Upload state of the proxy clip. Possible values are: Unqueued, Paused, Queued, Uploading, Uploaded, Failed, Unknown.
[i].status.originalClipTotalSize	integer	Total size of the original clip in bytes.
[i].status.proxyClipTotalSize	integer	Total size of the proxy clip in bytes.
[i].status.originalClipCompletedSize	integer	Completed upload size of the original clip in bytes.
[i].status.proxyClipCompletedSize	integer	Completed upload size of the proxy clip in bytes.
[i].status.secsRemaining	integer	Estimated seconds remaining until upload is completed. Value of -1 means calculation in progress.

204 - No upload data for this clip.

400 - Missing deviceName or path parameter.

404 - Clip not found.

Slate Control API

API to manage digital slate data for Blackmagic Design products.

GET /slates/nextClip

Retrieve the digital slate for the next clip.

Response

200 - Returns the slate data for the next clip.

The response is JSON.

Name	Type	Description
clip	object	
clip.clipName	string	Name of the clip file.
clip.reel	integer	Reel number (1-999).
clip.scene	string	Scene identifier. Must include at least one non-zero, non-space, non-punctuation character. Numeric values cannot exceed 999.
clip.sceneLocation	string	Location of the scene (interior or exterior). Possible values are: Interior, Exterior.
clip.sceneTime	string	Time of day for the scene. Possible values are: Day, Night.
clip.shotType	string	Type of shot. Possible values are: None, WS, MS, MCU, CU, BCU, ECU.
clip.slateFor	string	Indicates whether this slate is for an existing clip or the next clip to be recorded. Possible values are: Clip, Next Clip.
clip.take	integer	Take number (1-99).

Name	Type	Description
clip.takeType	string	Type of take. Possible values are: None, PU, VFX, SER.
clip.goodTake	boolean | null	Flag indicating if this was marked as a good take. Only available for existing clips, not for next clip; null when not applicable.
lens	object	Lens-related metadata.
lens.lensType	string	Type or model of the lens.
lens.iris	string	Iris/aperture setting. May not be editable if using a lens that reports iris electronically.
lens.focalLength	string	Focal length of the lens. May not be editable if using a lens that reports focal length electronically.
lens.distance	string	Focus distance. May not be editable if using a lens that reports focus distance electronically.
lens.filter	string	Filter used on the lens.
project	object	Project-related metadata.
project.projectName	string	Name of the project. May not be editable if connected via HDMI CEC.
project.director	string	Name of the director.
project.camera	string	Name/identifier for this camera. May not be editable if connected via HDMI CEC.
project.cameraOperator	string	Name of the camera operator.

409 - Slate data is not available.

PUT /slates/nextClip

Update the slate data for the next clip.

Parameters

Name	Type	Description
clip	object	
clip.reel	integer	Reel number (1-999).
clip.scene	string	Scene identifier. Must include at least one non-zero, non-space, non-punctuation character. Numeric values cannot exceed 999.
clip.take	integer	Take number (1-99).
clip.shotType	string	Type of shot. Possible values are: None, WS, MS, MCU, CU, BCU, ECU.
clip.takeType	string	Type of take. Possible values are: None, PU, VFX, SER.
clip.sceneLocation	string	Location of the scene (interior or exterior). Possible values are: Interior, Exterior.
clip.sceneTime	string	Time of day for the scene. Possible values are: Day, Night.
clip.goodTake	boolean	Flag indicating if this was a good take. Cannot be set for next clip.
lens	object	Lens-related metadata.
lens.lensType	string	Type or model of the lens.
lens.iris	string	Iris/aperture setting. May not be editable if using a lens that reports iris electronically.

Name	Type	Description
lens.focalLength	string	Focal length of the lens. May not be editable if using a lens that reports focal length electronically.
lens.distance	string	Focus distance. May not be editable if using a lens that reports focus distance electronically.
lens.filter	string	Filter used on the lens.
project	object	Project-related metadata.
project.projectName	string	Name of the project. May not be editable if connected via HDMI CEC.
project.director	string	Name of the director.
project.camera	string	Name/identifier for this camera. May not be editable if connected via HDMI CEC.
project.cameraOperator	string	Name of the camera operator.

Response

204 - Successfully updated the slate data.

400 - Invalid data in request.

409 - Partial update with errors.

The response is JSON.

Name	Type	Description
error	string	
details	array	
details[i]	object	
details[i].field	string	
details[i].message	string	

500 - Internal server error.

GET /slates/takeAutoIncrement

Get the auto-increment take setting.

Response

200 - Returns the auto-increment take setting.

The response is JSON.

Name	Type	Description
enabled	boolean	

409 - Slate is not available.

PUT /slates/takeAutoIncrement

Update the auto-increment take setting.

Parameters

Name	Type	Description
enabled (required)	boolean	Enable/disable auto-increment take setting

Response

204 - Successfully updated the setting.

400 - Invalid request data.

409 - Slate is not available.

500 - Internal server error.

POST /slates/nextClip/resetProjectData

Reset the project data for the next clip's slate.

Response

204 - Project data reset successfully.

409 - Slate is not available.

500 - Internal server error.

POST /slates/clips/{deviceName}/{path}/resetProjectData

Reset the project data for a specific clip's slate.

Parameters

Name	Type	Description
{deviceName} (required)	string	Name of the device where the clip is stored. This is the same as the web browser's device name.
{path} (required)	string	Path to the clip.

Response

204 - Project data reset successfully.

404 - Clip not found.

409 - Slate is not available.

500 - Internal server error.

POST /slates/nextClip/resetLensData

Reset the lens data for the next clip's slate.

Response

204 - Lens data reset successfully.

409 - Slate is not available.

500 - Internal server error.

POST /slates/clips/{deviceName}/{path}/resetLensData

Reset the lens data for a specific clip's slate.

Parameters

Name	Type	Description
{deviceName} (required)	string	Name of the device where the clip is stored. This is the same as the web browser's device name.
{path} (required)	string	Path to the clip.

Response

204 - Lens data reset successfully.

404 - Clip not found.

409 - Slate is not available.

500 - Internal server error.

GET /slates/clips/{deviceName}/{path}

Retrieve slate data for a specific clip.

Parameters

Name	Type	Description
{deviceName} (required)	string	Name of the device where the clip is stored. This is the same as the web browser's device name.
{path} (required)	string	Path to the clip.

Response

200 - Returns the slate data for the specified clip.

The response is JSON.

Name	Type	Description
clip	object	
clip.clipName	string	Name of the clip file.
clip.reel	integer	Reel number (1-999).
clip.scene	string	Scene identifier. Must include at least one non-zero, non-space, non-punctuation character. Numeric values cannot exceed 999.
clip.sceneLocation	string	Location of the scene (interior or exterior). Possible values are: Interior, Exterior.
clip.sceneTime	string	Time of day for the scene. Possible values are: Day, Night.
clip.shotType	string	Type of shot. Possible values are: None, WS, MS, MCU, CU, BCU, ECU.
clip.slateFor	string	Indicates whether this slate is for an existing clip or the next clip to be recorded. Possible values are: Clip, Next Clip.
clip.take	integer	Take number (1-99).
clip.takeType	string	Type of take. Possible values are: None, PU, VFX, SER.
clip.goodTake	boolean | null	Flag indicating if this was marked as a good take. Only available for existing clips, not for next clip; null when not applicable.
lens	object	Lens-related metadata.

Name	Type	Description
lens.lensType	string	Type or model of the lens.
lens.iris	string	Iris/aperture setting. May not be editable if using a lens that reports iris electronically.
lens.focalLength	string	Focal length of the lens. May not be editable if using a lens that reports focal length electronically.
lens.distance	string	Focus distance. May not be editable if using a lens that reports focus distance electronically.
lens.filter	string	Filter used on the lens.
project	object	Project-related metadata.
project.projectName	string	Name of the project. May not be editable if connected via HDMI CEC.
project.director	string	Name of the director.
project.camera	string	Name/identifier for this camera. May not be editable if connected via HDMI CEC.
project.cameraOperator	string	Name of the camera operator.

404 - Clip not found.

409 - Slate is not available.

PUT /slates/clips/{deviceName}/{path}

Update the slate data for a specific clip.

Parameters

Name	Type	Description
{deviceName} (required)	string	Name of the device where the clip is stored. This is the same as the web browser's device name.
{path} (required)	string	Path to the clip.

Name	Type	Description
clip	object	
clip.reel	integer	Reel number (1-999).
clip.scene	string	Scene identifier. Must include at least one non-zero, non-space, non-punctuation character. Numeric values cannot exceed 999.
clip.take	integer	Take number (1-99).
clip.shotType	string	Type of shot. Possible values are: None, WS, MS, MCU, CU, BCU, ECU.
clip.takeType	string	Type of take. Possible values are: None, PU, VFX, SER.
clip.sceneLocation	string	Location of the scene (interior or exterior). Possible values are: Interior, Exterior.
clip.sceneTime	string	Time of day for the scene. Possible values are: Day, Night.
clip.goodTake	boolean	Flag indicating if this was a good take. Cannot be set for next clip.
lens	object	Lens-related metadata.
lens.lensType	string	Type or model of the lens.

Name	Type	Description
lens.iris	string	Iris/aperture setting. May not be editable if using a lens that reports iris electronically.
lens.focalLength	string	Focal length of the lens. May not be editable if using a lens that reports focal length electronically.
lens.distance	string	Focus distance. May not be editable if using a lens that reports focus distance electronically.
lens.filter	string	Filter used on the lens.
project	object	Project-related metadata.
project.projectName	string	Name of the project. May not be editable if connected via HDMI CEC.
project.director	string	Name of the director.
project.camera	string	Name/identifier for this camera. May not be editable if connected via HDMI CEC.
project.cameraOperator	string	Name of the camera operator.

Response

204 - Successfully updated the slate data.

400 - Invalid data in request.

404 - Clip not found.

409 - Partial update with errors.

The response is JSON.

Name	Type	Description
error	string	
details	array	
details[i]	object	
details[i].field	string	
details[i].message	string	

GET /slates/lastClip

Retrieve slate data for the last recorded clip.

Response

200 - Returns the slate data for the last recorded clip.

The response is JSON.

Name	Type	Description
clip	object	
clip.clipName	string	Name of the clip file.
clip.reel	integer	Reel number (1-999).
clip.scene	string	Scene identifier. Must include at least one non-zero, non-space, non-punctuation character. Numeric values cannot exceed 999.
clip.sceneLocation	string	Location of the scene (interior or exterior). Possible values are: Interior, Exterior.
clip.sceneTime	string	Time of day for the scene. Possible values are: Day, Night.

Name	Type	Description
clip.shotType	string	Type of shot. Possible values are: None, WS, MS, MCU, CU, BCU, ECU.
clip.slateFor	string	Indicates whether this slate is for an existing clip or the next clip to be recorded. Possible values are: Clip, Next Clip.
clip.take	integer	Take number (1-99).
clip.takeType	string	Type of take. Possible values are: None, PU, VFX, SER.
clip.goodTake	boolean | null	Flag indicating if this was marked as a good take. Only available for existing clips, not for next clip; null when not applicable.
lens	object	Lens-related metadata.
lens.lensType	string	Type or model of the lens.
lens.iris	string	Iris/aperture setting. May not be editable if using a lens that reports iris electronically.
lens.focalLength	string	Focal length of the lens. May not be editable if using a lens that reports focal length electronically.
lens.distance	string	Focus distance. May not be editable if using a lens that reports focus distance electronically.
lens.filter	string	Filter used on the lens.
project	object	Project-related metadata.
project.projectName	string	Name of the project. May not be editable if connected via HDMI CEC.
project.director	string	Name of the director.
project.camera	string	Name/identifier for this camera. May not be editable if connected via HDMI CEC.
project.cameraOperator	string	Name of the camera operator.

409 - Slate is not available or no clip has been recorded.

PUT /slates/lastClip

Update the slate data for the last recorded clip.

Parameters

Name	Type	Description
clip	object	
clip.reel	integer	Reel number (1-999).
clip.scene	string	Scene identifier. Must include at least one non-zero, non-space, non-punctuation character. Numeric values cannot exceed 999.
clip.take	integer	Take number (1-99).
clip.shotType	string	Type of shot. Possible values are: None, WS, MS, MCU, CU, BCU, ECU.
clip.takeType	string	Type of take. Possible values are: None, PU, VFX, SER.
clip.sceneLocation	string	Location of the scene (interior or exterior). Possible values are: Interior, Exterior.
clip.sceneTime	string	Time of day for the scene. Possible values are: Day, Night.
clip.goodTake	boolean	Flag indicating if this was a good take. Cannot be set for next clip.

Name	Type	Description
lens	object	Lens-related metadata.
lens.lensType	string	Type or model of the lens.
lens.iris	string	Iris/aperture setting. May not be editable if using a lens that reports iris electronically.
lens.focalLength	string	Focal length of the lens. May not be editable if using a lens that reports focal length electronically.
lens.distance	string	Focus distance. May not be editable if using a lens that reports focus distance electronically.
lens.filter	string	Filter used on the lens.
project	object	Project-related metadata.
project.projectName	string	Name of the project. May not be editable if connected via HDMI CEC.
project.director	string	Name of the director.
project.camera	string	Name/identifier for this camera. May not be editable if connected via HDMI CEC.
project.cameraOperator	string	Name of the camera operator.

Response

204 - Successfully updated the slate data.

400 - Invalid data in request.

409 - Partial update with errors or no clip has been recorded.

The response is JSON.

Name	Type	Description
error	string	
details	array	
details[i]	object	
details[i].field	string	
details[i].message	string	

POST /slates/lastClip/resetProjectData

Reset the project data for the last recorded clip's slate.

Response

204 - Project data reset successfully.

409 - Slate is not available or no clip has been recorded.

POST /slates/lastClip/resetLensData

Reset the lens data for the last recorded clip's slate.

Response

204 - Lens data reset successfully.

409 - Slate is not available or no clip has been recorded.

500 - Internal server error.

GET /slates/{target}/{category}/{property}

Get individual slate property value.

Parameters

Name	Type	Description
{target} (required)	string	Target slate (nextClip for upcoming recording, lastClip for most recent recording).
{category} (required)	string	Category of the property.
{property} (required)	string	Property name within the category. Many combinations of (category, property) are invalid and return 404; valid combinations: - clip: clipName, slateFor, reel, scene, shotType, take, takeType, sceneLocation, sceneTime, goodTake - lens: lensType, iris, focalLength, distance, filter - project: projectName, director, camera, cameraOperator `clipName` and `slateFor` are read-only (PUT returns 403).

Response

200 - Property value retrieved successfully.

The response is JSON.

Single-property object keyed by the path's property name.

Name	Type	Description
	object	Single-property object keyed by the path's property name.
[{key}]		

400 - Invalid property path.

404 - Property not found.

409 - Slate is not available.

500 - Internal server error.

PUT /slates/{target}/{category}/{property}

Set individual slate property value.

Parameters

Name	Type	Description
{target} (required)	string	Target slate (nextClip for upcoming recording, lastClip for most recent recording).
{category} (required)	string	Category of the property.
{property} (required)	string	Property name within the category. Many combinations of (category, property) are invalid and return 404; valid combinations: - clip: clipName, slateFor, reel, scene, shotType, take, takeType, sceneLocation, sceneTime, goodTake - lens: lensType, iris, focalLength, distance, filter - project: projectName, director, camera, cameraOperator `clipName` and `slateFor` are read-only (PUT returns 403).

Single-property object keyed by the path's property name.

Name	Type	Description
	object	Single-property object keyed by the path's property name.
[{key}]		

Response

204 - Property value updated successfully.

400 - Invalid property value or path.

403 - Property is read-only (e.g. `clipName`, `slateFor`).

404 - Property not found.

409 - Slate is not available or property cannot be modified.

500 - Internal server error.

Preset Control API

API For controlling the presets on Blackmagic Design products

GET /presets

Get the list of the presets on the camera

Response

200 - OK

The response is JSON.

Name	Type	Description
presets	array	List of the presets on the camera (.cset files)
presets[i]	string	

POST /presets

Send a preset file to the camera

Response

200 - OK

The response is JSON.

Name	Type	Description
presetAdded	string	Name of the preset uploaded (without .cset extension)

400 - Bad request - missing Content-Disposition header or filename

GET /presets/active

Get the currently active preset on the camera

Response

200 - OK

The response is JSON.

Name	Type	Description
preset	string	Name of the active preset (with .cset extension, or 'default')

PUT /presets/active

Set the active preset on the camera

Parameters

Name	Type	Description
preset	string	Name of the active preset (with .cset extension, or 'default')

Response

204 - No Content

404 - Preset file not found

PARAMETERS /presets/{presetName}

GET /presets/{presetName}

Download the preset file

Response

200 - OK

The response is a binary file.

404 - File does not exist

PUT /presets/{presetName}

Save current camera state as a preset

Response

204 - No Content

DELETE /presets/{presetName}

Delete a preset from the camera

Response

204 - No Content

404 - Preset file not found

Audio Control API

API For controlling audio on Blackmagic Design Cameras

GET /audio/channels

Get the total number of audio channels available

Response

200 - Returns the total number of channels

The response is JSON.

Name	Type	Description
channels	integer	Total number of audio channels available

GET /audio/supportedInputs

Get the list of supported audio inputs

Response

200 - List of all supported audio inputs

The response is JSON.

Name	Type	Description
	array	
[i]	string	A supported audio input

GET /audio/channel/{channelIndex}/input

Get the audio input (source and type) for the selected channel

Parameters

Name	Type	Description
{channelIndex} (required)	integer	The index of the channel. Channels are numbered from 0 up to (channels - 1) where the total is reported by GET /audio/channels.

Response

200 - Currently selected input

The response is JSON.

Name	Type	Description
input (required)	string	Audio input source and type

404 - Channel does not exist

PUT /audio/channel/{channelIndex}/input

Set the audio input for the selected channel

Parameters

Name	Type	Description
{channelIndex} (required)	integer	The index of the channel. Channels are numbered from 0 up to (channels - 1) where the total is reported by GET /audio/channels.

Name	Type	Description
input (required)	string	Audio input source and type

Response

204 - No Content

400 - Invalid audio input

404 - Channel does not exist

500 - Internal server error

GET /audio/channel/{channelIndex}/input/description

Get the description of the current input of the selected channel

Parameters

Name	Type	Description
{channelIndex} (required)	integer	The index of the channel. Channels are numbered from 0 up to (channels - 1) where the total is reported by GET /audio/channels.

Response

200 - Description of the current input of the selected channel

The response is JSON.

Name	Type	Description
description	object	
description.gainRange	object	
description.gainRange.Min	number	The minimum gain value in dB
description.gainRange.Max	number	The maximum gain value in dB
description.capabilities	array	
description.capabilities[i]	object	
description.capabilities[i].PhantomPower	boolean	Input supports setting of phantom power
description.capabilities[i].LowCutFilter	boolean	Input supports setting of low cut filter
description.capabilities[i].Padding	object	
description.capabilities[i].Padding.available	boolean	Input supports setting of padding

Name	Type	Description
description.capabilities[i].Padding.forced	boolean	Padding is forced to be set for the input
description.capabilities[i].Padding.value	number	Value of the padding in dB

404 - Channel does not exist

GET /audio/channel/{channelIndex}/supportedInputs

Get the list of supported inputs and their availability to switch to for the selected channel

Parameters

Name	Type	Description
{channelIndex} (required)	integer	The index of the channel. Channels are numbered from 0 up to (channels - 1) where the total is reported by GET /audio/channels.

Response

200 - The list of supported inputs

The response is JSON.

Name	Type	Description
	array	
[i]	object	
[i].input	string	Input name
[i].available	boolean	Is the input available to be switched into from the current input for the selected channel

404 - Channel does not exist

GET /audio/channel/{channelIndex}/level

Get the audio input level for the selected channel

Parameters

Name	Type	Description
{channelIndex} (required)	integer	The index of the channel. Channels are numbered from 0 up to (channels - 1) where the total is reported by GET /audio/channels.

Response

200 - Currently set level for the selected channel

The response is JSON.

Name	Type	Description
gain	number	Gain value in dB
normalized	number	Normalized level value between 0.0 and 1.0
normalised	number	Deprecated: Use 'normalized' (American spelling) instead

404 - Channel does not exist

PUT /audio/channel/{channelIndex}/level

Set the audio input level for the selected channel

Parameters

Name	Type	Description
{channelIndex} (required)	integer	The index of the channel. Channels are numbered from 0 up to (channels - 1) where the total is reported by GET /audio/channels.

Name	Type	Description
gain	number	Gain value in dB
normalized	number	Normalized level value between 0.0 and 1.0
normalised	number	Deprecated: Use 'normalized' (American spelling) instead

Response

204 - No Content

400 - Invalid input or value out of range

404 - Channel does not exist

500 - Internal server error

GET /audio/channel/{channelIndex}/phantomPower

Get the audio input phantom power status for the selected channel

Parameters

Name	Type	Description
{channelIndex} (required)	integer	The index of the channel. Channels are numbered from 0 up to (channels - 1) where the total is reported by GET /audio/channels.

Response

200 - Currently set phantom power for the selected channel

The response is JSON.

Name	Type	Description
enabled (required)	boolean	Phantom power enabled state

404 - Channel does not exist

PUT /audio/channel/{channelIndex}/phantomPower

Set the audio phantom power for the selected channel

Parameters

Name	Type	Description
{channelIndex} (required)	integer	The index of the channel. Channels are numbered from 0 up to (channels - 1) where the total is reported by GET /audio/channels.

Name	Type	Description
enabled (required)	boolean	Phantom power enabled state

Response

204 - No Content

400 - Phantom power is not supported for this input

404 - Channel does not exist

500 - Internal server error

GET /audio/channel/{channelIndex}/padding

Get the audio input padding status for the selected channel

Parameters

Name	Type	Description
{channelIndex} (required)	integer	The index of the channel. Channels are numbered from 0 up to (channels - 1) where the total is reported by GET /audio/channels.

Response

200 - Currently set padding for the selected channel

The response is JSON.

Name	Type	Description
enabled (required)	boolean	Padding enabled state

404 - Channel does not exist

PUT /audio/channel/{channelIndex}/padding

Set the audio input padding for the selected channel

Parameters

Name	Type	Description
{channelIndex} (required)	integer	The index of the channel. Channels are numbered from 0 up to (channels - 1) where the total is reported by GET /audio/channels.

Name	Type	Description
enabled (required)	boolean	Padding enabled state

Response

204 - No Content

400 - Padding is not supported or is forced for this input

404 - Channel does not exist

500 - Internal server error

GET /audio/channel/{channelIndex}/lowCutFilter

Get the audio input low cut filter status for the selected channel

Parameters

Name	Type	Description
{channelIndex} (required)	integer	The index of the channel. Channels are numbered from 0 up to (channels - 1) where the total is reported by GET /audio/channels.

Response

200 - Currently set low cut filter for the selected channel

The response is JSON.

Name	Type	Description
enabled (required)	boolean	Low cut filter enabled state

404 - Channel does not exist

PUT /audio/channel/{channelIndex}/lowCutFilter

Set the audio input low cut filter for the selected channel

Parameters

Name	Type	Description
{channelIndex} (required)	integer	The index of the channel. Channels are numbered from 0 up to (channels - 1) where the total is reported by GET /audio/channels.

Name	Type	Description
enabled (required)	boolean	Low cut filter enabled state

Response

204 - No Content

400 - Low cut filter is not supported for this input

404 - Channel does not exist

500 - Internal server error

GET /audio/channel/{channelIndex}/available

Get the audio input's current availability for the selected channel

Parameters

Name	Type	Description
{channelIndex} (required)	integer	The index of the channel. Channels are numbered from 0 up to (channels - 1) where the total is reported by GET /audio/channels.

Response

200 - Currently set availability for the selected channel

The response is JSON.

Name	Type	Description
available	boolean	Whether the input is currently available

404 - Channel does not exist

Lens Control API

API For controlling the lens on Blackmagic Design products

GET /lens/iris

Get lens' aperture

Response

200 - OK

The response is JSON.

Name	Type	Description
continuousApertureAutoExposure	boolean	Is Aperture controlled by auto exposure
apertureStop	number	Aperture stop value
normalized	number	Normalized value
normalised	number	Deprecated: Use 'normalized' (American spelling) instead
apertureNumber	integer	Aperture number

403 - Request cannot be performed in the current state.

PUT /lens/iris

Set lens' aperture

Parameters

Name	Type	Description
apertureStop	number	Aperture stop value
normalized	number	Normalized value
normalised	number	Deprecated: Use 'normalized' (American spelling) instead
apertureNumber	integer	Aperture number
adjustmentStep	integer	Signed value for relative aperture adjustment

Response

204 - No Content

400 - Bad Request if out of range value is provided

403 - Forbidden if lens iris is not controllable or is controlled by auto exposure

GET /lens/zoom

Get lens' zoom

Response

200 - OK

The response is JSON.

Name	Type	Description
focalLength	number	Focal length in mm
normalized	number	Normalized value
normalised	number	Deprecated: Use 'normalized' (American spelling) instead

403 - Request cannot be performed in the current state.

PUT /lens/zoom

Set lens' zoom

Parameters

Name	Type	Description
focalLength	number	Focal length in mm
normalized	number	Normalized value
normalised	number	Deprecated: Use 'normalized' (American spelling) instead
adjustmentFocalLength	integer	Signed value for relative focal length adjustment
adjustmentNormalized	number	Signed normalized value for relative zoom adjustment
adjustmentNormalised	number	Signed normalized value for relative zoom adjustment

Response

204 - No Content

400 - Bad Request if out of range value is provided

403 - Forbidden if lens zoom is not controllable

GET /lens/focus

Get lens' focus

Response

200 - OK

The response is JSON.

Name	Type	Description
normalized	number	Normalized value
normalised	number	Deprecated: Use 'normalized' (American spelling) instead
focusDistance	object	Current focus distance in millimeters. Shape depends on the lens: - `{ "value": N }` for a single distance reading - `{ "near": N, "far": N }` when the lens reports a split near/far distance
focusDistance.value	integer	Focus distance in millimeters
focusDistance.near	integer	Near focus distance in millimeters (split distance lenses)
focusDistance.far	integer	Far focus distance in millimeters (split distance lenses)

403 - Request cannot be performed in the current state.

PUT /lens/focus

Set lens' focus

Parameters

Name	Type	Description
normalized	number	Normalized value
normalised	number	Deprecated: Use 'normalized' (American spelling) instead
focusDistance	integer	Focus distance in millimeters

Response

204 - No Content

400 - Bad Request if out of range value is provided

403 - Forbidden if lens focus is not controllable or focus distance is not controllable

PUT /lens/focus/doAutoFocus

Perform auto focus

Parameters

Name	Type	Description
position	object	
position.x	number	Normalized x coordinate for autofocus ROI
position.y	number	Normalized y coordinate for autofocus ROI

Response

204 - No Content

400 - Bad Request if out of range value is provided

403 - Forbidden if lens focus is not controllable

GET /lens/focus/autoFocus

Get autofocus status

Response

200 - OK

The response is JSON.

Name	Type	Description
supported	boolean	Whether autofocus is supported with the current lens
enabled	boolean	Whether autofocus is currently active
mode	string	Autofocus operating mode Possible values are: OneShot, Continuous, TrackObject, TrackFace.
state	string	Current autofocus state Possible values are: Idle, Focusing, Focused, Paused, Error.
errors	array	List of active autofocus errors
errors[i]	string	Possible values are: TooClose, LostTracking, ManualFocus.

PUT /lens/focus/autoFocus

Set autofocus mode

Parameters

Name	Type	Description
enabled	boolean	Enable or disable autofocus
mode	string	Autofocus operating mode Possible values are: OneShot, Continuous, TrackObject, TrackFace.

Response

204 - No Content

403 - Forbidden if lens focus is not controllable

GET /lens/focus/autoFocus/description

Get autofocus capabilities description

Response

200 - OK

The response is JSON.

Name	Type	Description
supported	boolean	Whether autofocus is supported with the current lens
supportedModes	array	List of autofocus modes available on this product
supportedModes[i]	string	Autofocus operating mode Possible values are: OneShot, Continuous, TrackObject, TrackFace.

GET /lens/focus/autoFocus/target

Get current autofocus target region

Response

200 - OK

The response is JSON.

Normalized rectangle describing the autofocus target region

Name	Type	Description
x	number	Normalized x coordinate (left edge)
y	number	Normalized y coordinate (top edge)
width	number	Normalized width of the region
height	number	Normalized height of the region

PUT /lens/focus/autoFocus/target

Set autofocus target position or region

Parameters

Name	Type	Description
x (required)	number	Normalized x coordinate of the target
y (required)	number	Normalized y coordinate of the target
width	number	Normalized width of the target region
height	number	Normalized height of the target region

Response

204 - No Content

400 - Bad Request if width is provided without height or vice versa

403 - Forbidden if lens focus is not controllable

PUT /lens/focus/autoFocus/retrigger

Retrigger autofocus

Response

204 - No Content

403 - Forbidden if lens focus is not controllable

PUT /lens/focus/autoFocus/trackFace

Track a detected face

Parameters

Name	Type	Description
faceIndex (required)	integer	Index of the detected face to track

Response

204 - No Content

403 - Forbidden if lens focus is not controllable

501 - Not Implemented if AI autofocus is not available on this product

GET /lens/focus/autoFocus/detectedFaces

Get list of detected faces

Response

200 - OK

The response is JSON.

Name	Type	Description
detectedFaces	array	
detectedFaces[i]	object	
detectedFaces[i].index	integer	Face index used for trackFace
detectedFaces[i].position	object	Normalized rectangle describing the autofocus target region
detectedFaces[i].position.x	number	Normalized x coordinate (left edge)
detectedFaces[i].position.y	number	Normalized y coordinate (top edge)
detectedFaces[i].position.width	number	Normalized width of the region
detectedFaces[i].position.height	number	Normalized height of the region

501 - Not Implemented if AI autofocus is not available on this product

GET /lens/opticalImageStabilization

Get optical image stabilization status

Response

200 - OK

The response is JSON.

Name	Type	Description
enabled	boolean	Whether optical image stabilization is enabled
controlAvailable	boolean	Whether optical image stabilization can be controlled

403 - Forbidden if optical image stabilization is not controllable in the current state

501 - Not Implemented if optical image stabilization is not supported on this product

PUT /lens/opticalImageStabilization

Enable or disable optical image stabilization

Parameters

Name	Type	Description
enabled (required)	boolean	Enable or disable optical image stabilization

Response

204 - No Content

400 - Bad Request if the body is missing the `enabled` field

403 - Forbidden if optical image stabilization is not controllable in the current state

501 - Not Implemented if optical image stabilization is not supported on this product

NEW!

GET /lens/jumpPoints/focus

Get focus jump points motor speed

Response

200 - OK

The response is JSON.

Name	Type	Description
speed (required)	number	Demand motor speed for jump point moves. Must be greater than 0 and at most 1.

403 - Forbidden if jump points speed cannot be read for the focus motor

NEW!

PUT /lens/jumpPoints/focus

Set focus jump points motor speed

Parameters

Name	Type	Description
speed (required)	number	Demand motor speed for jump point moves. Must be greater than 0 and at most 1.

Response

204 - No Content

400 - Bad Request if speed is missing, less than or equal to 0, or greater than 1

403 - Forbidden if jump points speed cannot be set for the focus motor

NEW!

GET /lens/jumpPoints/zoom

Get zoom jump points motor speed

Response

200 - OK

The response is JSON.

Name	Type	Description
speed (required)	number	Demand motor speed for jump point moves. Must be greater than 0 and at most 1.

403 - Forbidden if jump points speed cannot be read for the zoom motor

NEW!

PUT /lens/jumpPoints/zoom

Set zoom jump points motor speed

Parameters

Name	Type	Description
speed (required)	number	Demand motor speed for jump point moves. Must be greater than 0 and at most 1.

Response

204 - No Content

400 - Bad Request if speed is missing, less than or equal to 0, or greater than 1

403 - Forbidden if jump points speed cannot be set for the zoom motor

GET /lens/iris/description

Get detailed description of lens' iris capabilities

Response

200 - OK

The response is JSON.

Name	Type	Description
controllable	boolean	If the iris can be controlled
apertureStop	object	
apertureStop.min	number	Minimum aperture stop
apertureStop.max	number	Maximum aperture stop

403 - Request cannot be performed in the current state.

GET /lens/zoom/description

Get detailed description of lens' zoom capabilities

Response

200 - OK

The response is JSON.

Name	Type	Description
controllable	boolean	If the zoom can be controlled
focalLength	object	
focalLength.adjustable	boolean	If focal length is adjustable
focalLength.min	number	Minimum focal length
focalLength.max	number	Maximum focal length

403 - Request cannot be performed in the current state.

GET /lens/focus/description

Get detailed description of lens' focus capabilities

Response

200 - OK

The response is JSON.

Name	Type	Description
controllable	boolean	If the focus can be controlled
focusDistance	object	
focusDistance.adjustable	boolean	If focus distance is adjustable
focusDistance.min	integer	Minimum focus distance in millimeters
focusDistance.max	integer	Maximum focus distance in millimeters

403 - Request cannot be performed in the current state.

Video Control API

API For controlling the video on Blackmagic Design products

GET /video/iso

Get current ISO

Response

200 - OK

The response is JSON.

Name	Type	Description
iso	integer	Current ISO value

PUT /video/iso

Set current ISO

Parameters

Name	Type	Description
iso (required)	integer	ISO value to set

Response

204 - No Content

403 - ISO cannot be changed in the current state

500 - Internal server error

GET /video/supportedISOs

Get the list of supported ISO settings

Response

200 - List of supported ISO values

The response is JSON.

Name	Type	Description
supportedISOs	array	Array of supported ISO values
supportedISOs[i]	integer	

GET /video/gain

Get current gain value in decibels

Response

200 - OK

The response is JSON.

Name	Type	Description
gain	integer	Current gain value in decibels

PUT /video/gain

Set current gain value

Parameters

Name	Type	Description
gain (required)	integer	Gain value in decibels to set

Response

204 - No Content

403 - Gain cannot be changed in the current state

500 - Internal server error

GET /video/supportedGains

Get the list of supported gain settings in decibels

Response

200 - List of supported gain values in decibels

The response is JSON.

Name	Type	Description
supportedGains	array	Array of supported gain values in decibels
supportedGains[i]	integer	

GET /video/whiteBalance

Get current white balance

Response

200 - OK

The response is JSON.

Name	Type	Description
whiteBalance	integer	Current white balance

PUT /video/whiteBalance

Set current white balance

Parameters

Name	Type	Description
whiteBalance (required)	integer	White balance to set

Response

204 - No Content

400 - Invalid white balance temperature

500 - Internal server error

GET /video/whiteBalance/description

Get white balance range

Response

200 - OK

The response is JSON.

Name	Type	Description
whiteBalance	object	
whiteBalance.min	integer	Minimum color temperature
whiteBalance.max	integer	Maximum color temperature

PUT /video/whiteBalance/doAuto

Set current white balance automatically

Response

204 - No Content

500 - Internal server error

GET /video/whiteBalanceTint

Get white balance tint

Response

200 - OK

The response is JSON.

Name	Type	Description
whiteBalanceTint	integer	Current white balance tint

PUT /video/whiteBalanceTint

Set white balance tint

Parameters

Name	Type	Description
whiteBalanceTint (required)	integer	White balance tint to set

Response

204 - No Content

400 - Invalid white balance tint

500 - Internal server error

GET /video/whiteBalanceTint/description

Get white balance tint range

Response

200 - OK

The response is JSON.

Name	Type	Description
whiteBalanceTint	object	
whiteBalanceTint.min	integer	Minimum white balance tint
whiteBalanceTint.max	integer	Maximum white balance tint

GET /video/ndFilter

Get ND filter stop

Response

200 - OK

The response is JSON.

Name	Type	Description
stop	number	Current filter power (fStop)

501 - Not implemented for this device

PUT /video/ndFilter

Set ND filter stop

Parameters

Name	Type	Description
stop (required)	number	Filter power (fStop) to set

Response

204 - No Content

400 - Invalid ND filter stop

501 - Not implemented for this device

GET /video/supportedNDFilters

Get the list of available ND filter stops

Response

200 - List of available ND filter stops

The response is JSON.

Name	Type	Description
supportedStops	array	Array of available ND filter stops
supportedStops[i]	number	

501 - Not implemented for this device

GET /video/supportedNDFilterDisplayModes

Get the list of supported ND filter display modes

Response

200 - List of supported display modes

The response is JSON.

Name	Type	Description
supportedDisplayModes	array	Array of supported display modes
supportedDisplayModes[i]	string	Possible values are: Stop, Number, Fraction.

501 - Not implemented for this device

GET /video/ndFilter/displayMode

Get ND filter display mode on the camera

Response

200 - OK

The response is JSON.

Name	Type	Description
displayMode	string	Possible values are: Stop, Number, Fraction.

501 - Not implemented for this device

PUT /video/ndFilter/displayMode

Set ND filter display mode on the camera

Parameters

Name	Type	Description
displayMode (required)	string	Possible values are: Stop, Number, Fraction.

Response

204 - No Content

400 - Invalid display mode for ND filter

501 - Not implemented for this device

GET /video/ndFilterSelectable

Check if ND filter adjustments are selectable via a slider

Response

200 - Indicates if ND filter is selectable

The response is JSON.

Name	Type	Description
selectable	boolean	True if ND filter adjustments are selectable via a slider

501 - Not implemented for this device

GET /video/shutter

Get current shutter. Will return either shutter speed or shutter angle depending on shutter measurement in device settings

Response

200 - OK

The response is JSON.

Name	Type	Description
continuousShutterAutoExposure	boolean	Is shutter controlled by auto exposure
shutterSpeed	integer	Shutter speed value in fractions of a second (minimum is sensor frame rate)
shutterAngle	integer	Shutter angle value multiplied by 100 (e.g., 180° is represented as 18000)

PUT /video/shutter

Set current shutter

Parameters

Name	Type	Description
shutterSpeed	integer	Shutter speed value in fractions of a second (minimum is sensor frame rate)
shutterAngle	integer	Shutter angle value multiplied by 100 (e.g., 180° is represented as 18000)

Response

204 - No Content

500 - Internal server error

GET /video/shutter/measurement

Get the current shutter measurement mode

Response

200 - OK

The response is JSON.

Name	Type	Description
measurement	string	Possible values are: ShutterAngle, ShutterSpeed.

PUT /video/shutter/measurement

Set the shutter measurement mode

Parameters

Name	Type	Description
measurement (required)	string	Possible values are: ShutterAngle, ShutterSpeed.

Response

204 - No Content

400 - Invalid shutter measurement

500 - Internal server error

GET /video/supportedShutters

Get supported shutter settings based on current camera configuration

Response

200 - OK

The response is JSON.

Name	Type	Description
shutterAngles	array	Array of supported shutter angles
shutterAngles[i]	integer	Shutter angle value multiplied by 100 (e.g., 180° is represented as 18000)
shutterSpeeds	array	Array of supported shutter speeds
shutterSpeeds[i]	integer	Shutter speed value in fractions of a second (minimum is sensor frame rate)

GET /video/flickerFreeShutters

Get flicker-free shutter settings based on current camera configuration

Response

200 - OK

The response is JSON.

Name	Type	Description
shutterAngles	array	Array of flicker-free shutter angles
shutterAngles[i]	integer	Shutter angle value multiplied by 100 (e.g., 180° is represented as 18000)
shutterSpeeds	array	Array of flicker-free shutter speeds
shutterSpeeds[i]	integer	Shutter speed value in fractions of a second (minimum is sensor frame rate)

GET /video/autoExposure

Get current auto exposure mode

Response

200 - OK

The response is JSON.

Name	Type	Description
mode	string	Auto exposure mode Possible values are: Off, Continuous, OneShot.
type	string	Comma-separated list of device types in the auto exposure stack

PUT /video/autoExposure

Set auto exposure

Parameters

Name	Type	Description
mode	string	Auto exposure mode Possible values are: Off, Continuous, OneShot.
type	string	Comma-separated list of device types in the auto exposure stack

Response

204 - No Content

400 - Failed to set auto exposure mode

500 - Internal server error

GET /video/detailSharpening

Get the current state of detail sharpening

Response

200 - Current detail sharpening state

The response is JSON.

Name	Type	Description
enabled	boolean	Whether detail sharpening is enabled

501 - Not implemented for this device

PUT /video/detailSharpening

Enable or disable detail sharpening

Parameters

Name	Type	Description
enabled (required)	boolean	Enable or disable detail sharpening

Response

204 - Detail sharpening state updated

501 - Not implemented for this device

GET /video/detailSharpeningLevel

Get the current detail sharpening level

Response

200 - Current detail sharpening level

The response is JSON.

Name	Type	Description
level	string	Current detail sharpening level. Undefined when the normalized value does not match a discrete preset. Possible values are: Low, Medium, High, Undefined.
normalized	number	Continuous detail sharpening level between 0.0 and 1.0

501 - Not implemented for this device

PUT /video/detailSharpeningLevel

Set the detail sharpening level

Parameters

Name	Type	Description
level	string	Desired discrete level of detail sharpening Possible values are: Low, Medium, High.
normalized	number	Desired continuous detail sharpening level between 0.0 and 1.0

Response

204 - Detail sharpening level updated

400 - Invalid detail sharpening level

501 - Not implemented for this device

Camera Control API

API For controlling the Camera specific features on Blackmagic Design products

GET /camera/colorBars

Get the status of color bars display

Response

200 - Returns the current status of color bars

The response is JSON.

Name	Type	Description
enabled	boolean	Indicates if the color bars are currently enabled

PUT /camera/colorBars

Set the status of color bars display

Parameters

Name	Type	Description
enabled (required)	boolean	Enable or disable the color bars

Response

204 - Color bars status updated successfully

400 - Invalid request body

500 - Internal server error

GET /camera/programFeedDisplay

Get the status of program feed display

Response

200 - Returns the current status of program feed display

The response is JSON.

Name	Type	Description
enabled	boolean	Indicates if the program feed display is currently enabled

PUT /camera/programFeedDisplay

Set the status of program feed display

Parameters

Name	Type	Description
enabled (required)	boolean	Enable or disable the program feed display

Response

204 - Program feed display status updated successfully

400 - Invalid request body

500 - Internal server error

GET /camera/tallyStatus

Get the tally status of the camera

Response

200 - Returns the current tally status of the camera

The response is JSON.

Name	Type	Description
status	string	Current tally status of the camera Possible values are: None, Preview, Program.

PUT /camera/tallyStatus

Set the tally status of the camera

Parameters

Name	Type	Description
status (required)	string	Set the tally status of the camera Possible values are: None, Preview, Program.
timeout	integer	Optional timeout in milliseconds after which the tally will revert to its original state

Response

204 - Tally status updated successfully

400 - Invalid request body

500 - Internal server error

GET /camera/power

Get the power status of the camera

Response

200 - Returns the current power status

The response is JSON.

Name	Type	Description
source	string	Current power source of the camera Possible values are: Battery, AC, Fiber, USB, POE.
milliVolt	integer	Current voltage level in millivolts (rounded to nearest 100mV)
batteries	array	List of batteries currently connected to the camera
batteries[i]	object	
batteries[i].milliVolt	integer	Battery voltage in millivolts (rounded to nearest 100mV)
batteries[i].chargeRemainingPercent	integer	Remaining battery charge percentage
batteries[i].statusFlags	array	List of battery status flags
batteries[i].statusFlags[i]	string	Possible values are: Unknown Battery Status, Battery Is Present, Battery Is Charging, Battery Percentage Is Low, Battery Voltage Is Low, Battery Is Critically Low, Charge Remaining Percentage Is Estimated, Battery Communications Is Active, Battery Is Connected.

GET /camera/power/displayMode

Get the power display mode of the camera

Response

200 - Returns the current power display mode

The response is JSON.

Name	Type	Description
mode	string	Current power display mode Possible values are: Percentage, Voltage.

PUT /camera/power/displayMode

Set the power display mode of the camera

Parameters

Name	Type	Description
mode (required)	string	Power display mode to set Possible values are: Percentage, Voltage.

Response

204 - Power display mode updated successfully

400 - Invalid power display mode

500 - Internal server error

GET /camera/timingReferenceLock

Get the timing reference lock status

Response

200 - Returns the timing reference lock status

The response is JSON.

Name	Type	Description
locked	boolean	Indicates if timing reference is locked

GET /camera/motionSensor/euler

Get motion sensor Euler angles

Response

200 - Returns the current Euler angles from the motion sensor

The response is JSON.

Name	Type	Description
roll	number	Roll angle in radians (rotation about x-axis)
pitch	number	Pitch angle in radians (rotation about y-axis)
yaw	number	Yaw angle in radians (rotation about z-axis). Always 0 on cameras without magnetometer.

501 - Motion sensor not available on this device

GET /camera/motionSensor/horizon

Get relative horizon position

Response

200 - Returns the relative horizon position

The response is JSON.

Name	Type	Description
roll	number	Relative roll position (0.0 to 1.0, where 0.5 is centered)
pitch	number	Relative pitch position (0.0 to 1.0, where 0.5 is centered)

501 - Motion sensor not available on this device

Immersive Control API

API for controlling immersive camera settings on Blackmagic Design cameras

GET /immersive/display/{displayName}/eye

Get the current eye view for a specific display

Parameters

Name	Type	Description
{displayName} (required)	string	The display name. Obtainable from /monitoring/display which returns a list of displayNames.

Response

200 - OK

The response is JSON.

Name	Type	Description
eye (required)	string	The eye view to display Possible values are: Left, Right, SideBySide, FollowLCD.

400 - Invalid display name format

404 - Display not found

422 - Failed to get eye view

501 - Not Implemented on this product

PUT /immersive/display/{displayName}/eye

Set the eye view for a specific display

Parameters

Name	Type	Description
{displayName} (required)	string	The display name. Obtainable from /monitoring/display which returns a list of displayNames.

Name	Type	Description
eye (required)	string	The eye view to display Possible values are: Left, Right, SideBySide, FollowLCD.

Response

204 - No Content

400 - Invalid input or display name format

404 - Display not found

422 - Failed to set eye view

501 - Not Implemented on this product

Color Correction Control API

API For controlling the color correction on Blackmagic Design products based on DaVinci Resolve Color Corrector

GET /colorCorrection/lift

Get color correction lift

Response

200 - OK

The response is JSON.

Name	Type	Description
red	number	Red lift component. If omitted, value remains unchanged.
green	number	Green lift component. If omitted, value remains unchanged.
blue	number	Blue lift component. If omitted, value remains unchanged.
luma	number	Luma lift component. If omitted, value remains unchanged.

PUT /colorCorrection/lift

Set color correction lift

Parameters

Name	Type	Description
red	number	Red lift component. If omitted, value remains unchanged.
green	number	Green lift component. If omitted, value remains unchanged.
blue	number	Blue lift component. If omitted, value remains unchanged.
luma	number	Luma lift component. If omitted, value remains unchanged.

Response

204 - No Content

501 - Not Implemented on this product

GET /colorCorrection/gamma

Get color correction gamma

Response

200 - OK

The response is JSON.

Name	Type	Description
red	number	Red gamma component. If omitted, value remains unchanged.
green	number	Green gamma component. If omitted, value remains unchanged.
blue	number	Blue gamma component. If omitted, value remains unchanged.
luma	number	Luma gamma component. If omitted, value remains unchanged.

PUT /colorCorrection/gamma

Set color correction gamma

Parameters

Name	Type	Description
red	number	Red gamma component. If omitted, value remains unchanged.
green	number	Green gamma component. If omitted, value remains unchanged.
blue	number	Blue gamma component. If omitted, value remains unchanged.
luma	number	Luma gamma component. If omitted, value remains unchanged.

Response

204 - No Content

501 - Not Implemented on this product

GET /colorCorrection/gain

Get color correction gain

Response

200 - OK

The response is JSON.

Name	Type	Description
red	number	Red gain component. If omitted, value remains unchanged.
green	number	Green gain component. If omitted, value remains unchanged.
blue	number	Blue gain component. If omitted, value remains unchanged.
luma	number	Luma gain component. If omitted, value remains unchanged.

PUT /colorCorrection/gain

Set color correction gain

Parameters

Name	Type	Description
red	number	Red gain component. If omitted, value remains unchanged.
green	number	Green gain component. If omitted, value remains unchanged.
blue	number	Blue gain component. If omitted, value remains unchanged.
luma	number	Luma gain component. If omitted, value remains unchanged.

Response

204 - No Content

501 - Not Implemented on this product

GET /colorCorrection/offset

Get color correction offset

Response

200 - OK

The response is JSON.

Name	Type	Description
red	number	Red offset component. If omitted, value remains unchanged.
green	number	Green offset component. If omitted, value remains unchanged.
blue	number	Blue offset component. If omitted, value remains unchanged.
luma	number	Luma offset component. If omitted, value remains unchanged.

PUT /colorCorrection/offset

Set color correction offset

Parameters

Name	Type	Description
red	number	Red offset component. If omitted, value remains unchanged.
green	number	Green offset component. If omitted, value remains unchanged.
blue	number	Blue offset component. If omitted, value remains unchanged.
luma	number	Luma offset component. If omitted, value remains unchanged.

Response

204 - No Content

501 - Not Implemented on this product

GET /colorCorrection/contrast

Get color correction contrast

Response

200 - OK

The response is JSON.

Name	Type	Description
pivot	number	Contrast pivot point. If omitted, value remains unchanged.
adjust	number	Contrast adjustment. If omitted, value remains unchanged.

PUT /colorCorrection/contrast

Set color correction contrast

Parameters

Name	Type	Description
pivot	number	Contrast pivot point. If omitted, value remains unchanged.
adjust	number	Contrast adjustment. If omitted, value remains unchanged.

Response

204 - No Content

501 - Not Implemented on this product

GET /colorCorrection/color

Get color correction color properties

Response

200 - OK

The response is JSON.

Name	Type	Description
hue	number	Color hue adjustment. If omitted, value remains unchanged.
saturation	number	Color saturation adjustment. If omitted, value remains unchanged.

PUT /colorCorrection/color

Set color correction color properties

Parameters

Name	Type	Description
hue	number	Color hue adjustment. If omitted, value remains unchanged.
saturation	number	Color saturation adjustment. If omitted, value remains unchanged.

Response

204 - No Content

501 - Not Implemented on this product

GET /colorCorrection/lumaContribution

Get color correction luma contribution

Response

200 - OK

The response is JSON.

Name	Type	Description
lumaContribution	number	Luma contribution value. If omitted, value remains unchanged.

PUT /colorCorrection/lumaContribution

Set color correction luma contribution

Parameters

Name	Type	Description
lumaContribution	number	Luma contribution value. If omitted, value remains unchanged.

Response

204 - No Content

501 - Not Implemented on this product

Notification websocket - 1.2.0

Service that notifies subscribers of device state changes.

messages

Subscribe (The messages from the server/device)

Websocket Opened Message (JSON)

Name	Type	Description
.data	object	
.data.action	string	Possible values are: websocketOpened.
.type	string	Possible values are: event.

Response Message (JSON)

Name	Type	Description
.data	object	
.data.action	string	Possible values are: subscribe, unsubscribe, listSubscriptions, listProperties.
.data.properties	array	
.data.properties[i]	string	Device property the user can subscribe to. The user can either choose a value from the predefined enum or provide a wildcard string. Possible values are: /media/workingset, /media/active, /media/slots, /system, /system/product, /system/codecFormat, /system/videoFormat, /system/format, /system/supportedFormats, /timelines/0, /timelines/0/selection, /transports/0, /transports/0/stop, /transports/0/play, /transports/0/playback, /transports/0/record, /transports/0/timecode, /transports/0/timecode/source, /transports/0/clipIndex, /slates/nextClip, /slates/lastClip, /slates/takeAutoIncrement, /monitoring/{displayName}/cleanFeed, /monitoring/{displayName}/displayLUT, /monitoring/{displayName}/displayLUTSlot, /monitoring/{displayName}/zebra, /monitoring/{displayName}/focusAssist, /monitoring/{displayName}/frameGuide, /monitoring/{displayName}/frameGrids, /monitoring/{displayName}/safeArea, /monitoring/{displayName}/falseColor, /monitoring/focusAssist, /monitoring/frameGuideRatio, /monitoring/frameGrids, /monitoring/safeAreaPercent, /luts, /luts/slots/{slotIndex}, /luts/recordWithLUT, /cloud/clips/activeUploading, /cloud/projects/active, /cloud/projects, /livestreams/0, /livestreams/0/activePlatform, /livestreams/0/available, /livestreams/platforms, /transports/0/prerecord, /transports/0/prerecord/auto, /transports/0/prerecord/maxDuration, /transports/0/proxyRecording, /system/dynamicRange, /system/supportedDynamicRanges, /system/colorScience, /system/supportedColorSciences. Must match the pattern: .*
.data.values	object	An object with property names as the key and a property value as json. Check the next section for the device properties and their return values.
.data.success	boolean	
.type	string	Possible values are: response.
.id	number	Optional parameter that repeats the id in the output for tracking messages.

Event Message (JSON)

Name	Type	Description
.data	object	
.data.action	string	Possible values are: propertyValueChanged.
.data.property	string	Device property the user can subscribe to. The user can either choose a value from the predefined enum or provide a wildcard string. Possible values are: /media/workingset, /media/active, /media/slots, /system, /system/product, /system/codecFormat, /system/videoFormat, /system/format, /system/supportedFormats, /timelines/0, /timelines/0/selection, /transports/0, /transports/0/stop, /transports/0/play, /transports/0/playback, /transports/0/record, /transports/0/timecode, /transports/0/timecode/source, /transports/0/clipIndex, /slates/nextClip, /slates/lastClip, /slates/takeAutoIncrement, /monitoring/{displayName}/cleanFeed, /monitoring/{displayName}/displayLUT, /monitoring/{displayName}/displayLUTSlot, /monitoring/{displayName}/zebra, /monitoring/{displayName}/focusAssist, /monitoring/{displayName}/frameGuide, /monitoring/{displayName}/frameGrids, /monitoring/{displayName}/safeArea, /monitoring/{displayName}/falseColor, /monitoring/focusAssist, /monitoring/frameGuideRatio, /monitoring/frameGrids, /monitoring/safeAreaPercent, /luts, /luts/slots/{slotIndex}, /luts/recordWithLUT, /cloud/clips/activeUploading, /cloud/projects/active, /cloud/projects, /livestreams/0, /livestreams/0/activePlatform, /livestreams/0/available, /livestreams/platforms, /transports/0/prerecord, /transports/0/prerecord/auto, /transports/0/prerecord/maxDuration, /transports/0/proxyRecording, /system/dynamicRange, /system/supportedDynamicRanges, /system/colorScience, /system/supportedColorSciences. Must match the pattern: .*
.data.value	object	An object with property names as the key and a property value as json. Check the next section for the device properties and their return values.
.type	string	Possible values are: event.

Publish (The messages that user can send to the server/device)

Response Message (JSON)

Name	Type	Description
.data	object	
.data.action	string	Possible values are: subscribe, unsubscribe, listSubscriptions, listProperties.
.data.properties	array	

Name	Type	Description
.data.properties[i]	string	Device property the user can subscribe to. The user can either choose a value from the predefined enum or provide a wildcard string. Possible values are: /media/workingset, /media/active, /media/slots, /system, /system/product, /system/codecFormat, /system/videoFormat, /system/format, /system/supportedFormats, /timelines/0, /timelines/0/selection, /transports/0, /transports/0/stop, /transports/0/play, /transports/0/playback, /transports/0/record, /transports/0/timecode, /transports/0/timecode/source, /transports/0/clipIndex, /slates/nextClip, /slates/lastClip, /slates/takeAutoIncrement, /monitoring/{displayName}/cleanFeed, /monitoring/{displayName}/displayLUT, /monitoring/{displayName}/displayLUTSlot, /monitoring/{displayName}/zebra, /monitoring/{displayName}/focusAssist, /monitoring/{displayName}/frameGuide, /monitoring/{displayName}/frameGrids, /monitoring/{displayName}/safeArea, /monitoring/{displayName}/falseColor, /monitoring/focusAssist, /monitoring/frameGuideRatio, /monitoring/frameGrids, /monitoring/safeAreaPercent, /luts, /luts/slots/{slotIndex}, /luts/recordWithLUT, /cloud/clips/activeUploading, /cloud/projects/active, /cloud/projects, /livestreams/0, /livestreams/0/activePlatform, /livestreams/0/available, /livestreams/platforms, /transports/0/prerecord, /transports/0/prerecord/auto, /transports/0/prerecord/maxDuration, /transports/0/proxyRecording, /system/dynamicRange, /system/supportedDynamicRanges, /system/colorScience, /system/supportedColorSciences. Must match the pattern: .*
.data.values	object	An object with property names as the key and a property value as json. Check the next section for the device properties and their return values.
.data.success	boolean	
.type	string	Possible values are: response.
.id	number	Optional parameter that repeats the id in the output for tracking messages.

Device Properties

/media/workingset

The value JSON returned via the eventResponse when the `/media/workingset` property changes on the device:

Name	Type	Description
.size	integer	The fixed size of this device's working set.
.workingset	array	Array of devices within the working set. null if no device is present within the given working set slot.
.workingset[i]		

/media/active

The value JSON returned via the eventResponse when the `/media/active` property changes on the device:

Name	Type	Description
.workingsetIndex	integer	Working set index of the active media device.
.deviceName	string	Internal device name of this media device.

/media/slots

The value JSON returned via the eventResponse when the `/media/slots` property changes on the device:

Name	Type	Description
	array	
[i]	object	
[i].index	integer	The index of this slot in the device.
[i].type	string	The type of media slot. Possible values are: USB, SDCard, CFX, SSD, CFast, EmptyModule, MediaModule, NetworkShare, InternalDrive, Invalid.

/system

The value JSON returned via the eventResponse when the `/system` property changes on the device:

Name	Type	Description
.codecFormat	object	Codec format configuration.
.codecFormat.codec	string	Codec format serialised as a string.
.codecFormat.container	string	Multimedia container format.
.videoFormat	object	Currently selected video format.
.videoFormat.frameRate	string	Frame rate. Possible values are: 23.98, 24.00, 24, 25.00, 25, 29.97, 30.00, 30, 47.95, 48.00, 48, 50.00, 50, 59.94, 60.00, 60, 119.88, 120.00, 120.
.videoFormat.height	number	Height dimension of video format.
.videoFormat.width	number	Width dimension of video format.
.videoFormat.interlaced	boolean	Is the display format interlaced?.
.videoFormat.name	string	Video format serialised as a string.

/system/product

Product information.

The value JSON returned via the eventResponse when the `/system/product` property changes on the device:

Name	Type	Description
.deviceName	string	Name of device as displayed in Setup.
.productName	string	Device's product name.
.softwareVersion	string	Software version running on device.

/system/codecFormat

Codec format configuration.

The value JSON returned via the eventResponse when the `/system/codecFormat` property changes on the device:

Name	Type	Description
.codec	string	Codec format serialised as a string.
.container	string	Multimedia container format.

/system/videoFormat

Currently selected video format.

The value JSON returned via the eventResponse when the `/system/videoFormat` property changes on the device:

Name	Type	Description
.frameRate	string	Frame rate. Possible values are: 23.98, 24.00, 24, 25.00, 25, 29.97, 30.00, 30, 47.95, 48.00, 48, 50.00, 50, 59.94, 60.00, 60, 119.88, 120.00, 120.
.height	number	Height dimension of video format.
.width	number	Width dimension of video format.
.interlaced	boolean	Is the display format interlaced?.
.name	string	Video format serialised as a string.

/system/format

The value JSON returned via the eventResponse when the `/system/format` property changes on the device:

Name	Type	Description
.codec	string	Codec format serialised as a string.
.frameRate	string	Frame rate. Possible values are: 23.98, 24.00, 24, 25.00, 25, 29.97, 30.00, 30, 47.95, 48.00, 48, 50.00, 50, 59.94, 60.00, 60, 119.88, 120.00, 120.
.maxOffSpeedFrameRate	number	
.minOffSpeedFrameRate	number	
.offSpeedEnabled	boolean	
.offSpeedFrameRate	number	
.recordResolution	object	
.recordResolution.height	number	Height of the resolution.
.recordResolution.width	number	Width of the resolution.
.sensorResolution	object	
.sensorResolution.height	number	Height of the resolution.
.sensorResolution.width	number	Width of the resolution.

/system/supportedFormats

The value JSON returned via the eventResponse when the `/system/supportedFormats` property changes on the device:

Name	Type	Description
.supportedFormats	array	
.supportedFormats[i]	object	
.supportedFormats[i].codecs	array	
.supportedFormats[i].codecs[i]	string	
.supportedFormats[i].frameRates	array	
.supportedFormats[i].frameRates[i]	string	Possible values are: 23.98, 24.00, 24, 25.00, 25, 29.97, 30.00, 30, 47.95, 48.00, 48, 50.00, 50, 59.94, 60.00, 60, 119.88, 120.00, 120.
.supportedFormats[i]. maxOffSpeedFrameRate	number	
.supportedFormats[i]. minOffSpeedFrameRate	number	
.supportedFormats[i]. recordResolution	object	
.supportedFormats[i]. recordResolution.height	number	Height of the resolution.
.supportedFormats[i]. recordResolution.width	number	Width of the resolution.
.supportedFormats[i]. sensorResolution	object	
.supportedFormats[i]. sensorResolution.height	number	Height of the resolution.
.supportedFormats[i]. sensorResolution.width	number	Width of the resolution.

/timelines/0

The value JSON returned via the eventResponse when the `/timelines/0` property changes on the device:

Name	Type	Description
.clips	array	
.clips[i]	object	Timeline clip.
.clips[i].clipUniqueId	integer	Unique identifier used to identify this media clip. If the same media clip is added to the timeline multiple times, each timeline clip has the same clipUniqueId
.clips[i].frameCount	integer	Duration of timeline clip in frames, the number of frames in this clip on the timeline.
.clips[i].durationTimecode	string	Duration of the timeline clip in timecode format serialised as string. This will differ to durationTimecode reported in /clips for this clipUniqueId if clipIn or frameCount was specified when adding this clip to the timeline.
.clips[i].clipIn	string	In frame offset for the clip on the timeline, where 0 is the first frame of the on-disk clip.
.clips[i].inTimecode	string	Clip timecode of the first frame of this timeline clip serialised as string (clip startTimecode + clipIn frames).

Name	Type	Description
.clips[i].timelineIn	string	Timeline position of the first frame of this clip, where 0 is the first frame of the timeline.
.clips[i].timelineInTimecode	string	Timeline timecode of the first frame of this timeline clip serialised as string.

/timelines/0/selection

Timeline selection.

The value JSON returned via the eventResponse when the `/timelines/0/selection` property changes on the device:

Name	Type	Description
.clipIds	array	Array of clip IDs (clipUniqueId) currently selected for the remote selection timeline. A clip ID can be included multiple times. Empty array indicates there is no selection.
.clipIds[i]	integer	Clip unique ID included in selection.

/transports/0

The value JSON returned via the eventResponse when the `/transports/0` property changes on the device:

Name	Type	Description
.mode	string	Transport mode. Possible values are: InputPreview, InputRecord, Output.

/transports/0/stop

true when transport mode is InputPreview or when in Output mode and speed is 0.

The value JSON returned via the eventResponse when the `/transports/0/stop` property changes on the device:

Name	Type	Description
	boolean	true when transport mode is InputPreview or when in Output mode and speed is 0.

/transports/0/play

True when transport is in Output mode and speed is non-zero.

The value JSON returned via the eventResponse when the `/transports/0/play` property changes on the device:

Name	Type	Description
	boolean	True when transport is in Output mode and speed is non-zero.

/transports/0/playback

The value JSON returned via the eventResponse when the `/transports/0/playback` property changes on the device:

Name	Type	Description
.type	string	Possible values are: Play, Jog, Shuttle, Var.
.loop	boolean	When true playback loops from the end of the timeline to the beginning of the timeline.
.singleClip	boolean	When true playback loops from the end of the current clip to the beginning of the current clip.
.speed	number	Playback speed, 1.0 for normal forward playback
.position	integer	Playback position on the timeline in units of video frames.

/transports/0/record

The value JSON returned via the eventResponse when the `/transports/0/record` property changes on the device:

Name	Type	Description
.recording	boolean	Is transport in Input Record mode.

/transports/0/timecode

The value JSON returned via the eventResponse when the `/transports/0/timecode` property changes on the device:

Name	Type	Description
.display	string	The display timecode serialised as a string.
.timeline	string	The timeline timecode serialised as a string.

/transports/0/timecode/source

The value JSON returned via the eventResponse when the `/transports/0/timecode/source` property changes on the device:

Name	Type	Description
.source	string	Possible values are: Timeline, Clip.
.timecodeInputSource	string	Possible values are: Internal, Embedded, External, TimeOfDay, Preset, LastClip, Unknown.

/transports/0/clipIndex

The value JSON returned via the eventResponse when the `/transports/0/clipIndex` property changes on the device:

Name	Type	Description
.clipIndex	number | null	The 0-based index of the clip being played on the timeline. null when there is no timeline or an empty timeline.

/slates/nextClip

The value JSON returned via the eventResponse when the `/slates/nextClip` property changes on the device:

Name	Type	Description
.clip	object	
.clip.clipName	string	
.clip.reel	integer	
.clip.scene	string	
.clip.sceneLocation	string	Possible values are: Interior, Exterior.
.clip.sceneTime	string	Possible values are: Day, Night.
.clip.shotType	string	Possible values are: None, WS, MS, MCU, CU, BCU, ECU.
.clip.slateFor	string	Possible values are: Clip, Next Clip.
.clip.take	integer	
.clip.takeType	string	Possible values are: None, PU, VFX, SER.
.lens	object	
.lens.lensType	string	
.lens.iris	string	
.lens.focalLength	string	
.lens.distance	string	
.lens.filter	string	
.project	object	
.project.projectName	string	
.project.director	string	
.project.camera	string	
.project.cameraOperator	string	

/slates/lastClip

The value JSON returned via the eventResponse when the `/slates/lastClip` property changes on the device:

Name	Type	Description
.clip	object	
.clip.clipName	string	
.clip.reel	integer	
.clip.scene	string	
.clip.sceneLocation	string	Possible values are: Interior, Exterior.
.clip.sceneTime	string	Possible values are: Day, Night.
.clip.shotType	string	Possible values are: None, WS, MS, MCU, CU, BCU, ECU.
.clip.slateFor	string	Possible values are: Clip, Next Clip.
.clip.take	integer	
.clip.takeType	string	Possible values are: None, PU, VFX, SER.
.clip.goodTake	boolean	

Name	Type	Description
.lens	object	
.lens.lensType	string	
.lens.iris	string	
.lens.focalLength	string	
.lens.distance	string	
.lens.filter	string	
.project	object	
.project.projectName	string	
.project.director	string	
.project.camera	string	
.project.cameraOperator	string	

/slates/takeAutoIncrement

The value JSON returned via the eventResponse when the `/slates/takeAutoIncrement` property changes on the device:

Name	Type	Description
.enabled	boolean	True if take auto-increment is enabled.

/monitoring/{displayName}/cleanFeed

The value JSON returned via the eventResponse when the `/monitoring/{displayName}/cleanFeed` property changes on the device:

Name	Type	Description
.enabled	boolean	Indicates if the feature is enabled.

/monitoring/{displayName}/displayLUT

The value JSON returned via the eventResponse when the `/monitoring/{displayName}/displayLUT` property changes on the device:

Name	Type	Description
.enabled	boolean	Indicates if the feature is enabled.

NEW!

/monitoring/{displayName}/displayLUTSlot

The value JSON returned via the eventResponse when the `/monitoring/{displayName}/displayLUTSlot` property changes on the device:

Name	Type	Description
.slot	integer	Index of the LUT slot applied to this display.

/monitoring/{displayName}/zebra

The value JSON returned via the eventResponse when the `/monitoring/{displayName}/zebra` property changes on the device:

Name	Type	Description
.enabled	boolean	Indicates if the feature is enabled.

/monitoring/{displayName}/focusAssist

The value JSON returned via the eventResponse when the `/monitoring/{displayName}/focusAssist` property changes on the device:

Name	Type	Description
.enabled	boolean	Indicates if the feature is enabled.

/monitoring/{displayName}/frameGuide

The value JSON returned via the eventResponse when the `/monitoring/{displayName}/frameGuide` property changes on the device:

Name	Type	Description
.enabled	boolean	Indicates if the feature is enabled.

/monitoring/{displayName}/frameGrids

The value JSON returned via the eventResponse when the `/monitoring/{displayName}/frameGrids` property changes on the device:

Name	Type	Description
.enabled	boolean	Indicates if the feature is enabled.

/monitoring/{displayName}/safeArea

The value JSON returned via the eventResponse when the `/monitoring/{displayName}/safeArea` property changes on the device:

Name	Type	Description
.enabled	boolean	Indicates if the feature is enabled.

/monitoring/{displayName}/falseColor

The value JSON returned via the eventResponse when the `/monitoring/{displayName}/falseColor` property changes on the device:

Name	Type	Description
.enabled	boolean	Indicates if the feature is enabled.

/monitoring/focusAssist

The value JSON returned via the eventResponse when the `/monitoring/focusAssist` property changes on the device:

Name	Type	Description
.mode	string	Possible values are: Peak, ColoredLines.
.color	string	Possible values are: Red, Green, Blue, White, Black.
.intensity	integer	

/monitoring/frameGuideRatio

The value JSON returned via the eventResponse when the `/monitoring/frameGuideRatio` property changes on the device:

Name	Type	Description
.ratio	string	

/monitoring/frameGrids

The value JSON returned via the eventResponse when the `/monitoring/frameGrids` property changes on the device:

Name	Type	Description
.frameGrids	array	
.frameGrids[i]	string	Possible values are: Thirds, Crosshair, Dot, Horizon.

/monitoring/safeAreaPercent

The value JSON returned via the eventResponse when the `/monitoring/safeAreaPercent` property changes on the device:

Name	Type	Description
.percent	integer	Safe area coverage percentage.

NEW!

/luts

The value JSON returned via the eventResponse when the `/luts` property changes on the device:

Name	Type	Description
.slotCount	integer	Number of LUT slots this product has.
.luts	array	Every LUT stored on the device, including the ones the current color science cannot use.
.luts[i]	object	
.luts[i].fileName	string	Name of the .cube file, as used when loading the LUT into a slot.
.luts[i].title	string	Title from the .cube file header.
.luts[i].titleOutputOnly	string	Shortened title describing only the output of the LUT.
.luts[i].inputColorScience	string	Possible values are: Unknown, Gen5, Gen6.
.luts[i].outputGamut	string	Possible values are: Unknown, Rec709, Rec2020, P3-D65.

Name	Type	Description
.luts[i].outputGamma	string	Possible values are: SDR, HLG, PQ.
.luts[i].visible	boolean	True when this LUT is usable with the color science the product is currently recording in.

NEW!

/luts/slots/{slotIndex}

The value JSON returned via the eventResponse when the `/luts/slots/{slotIndex}` property changes on the device:

Name	Type	Description
.slot	integer	Index of the LUT slot.
.loaded	boolean	True when a LUT is loaded into this slot. The remaining fields are absent when it is false.
.fileName	string	Name of the .cube file loaded into this slot.
.embedded	boolean	True when the loaded LUT came from the clip being played back rather than from the LUT catalog.
.gamma	string	Possible values are: SDR, HLG, PQ.

NEW!

/luts/recordWithLUT

The value JSON returned via the eventResponse when the `/luts/recordWithLUT` property changes on the device:

Name	Type	Description
.enabled	boolean	Indicates if the feature is enabled.

/cloud/clips/activeUploading

The value JSON returned via the eventResponse when the `/cloud/clips/activeUploading` property changes on the device:

Name	Type	Description
	array	
[i]	object	
[i].path	string	REST path to the clip (deviceName/path).
[i].projectID	integer	ID of the project this clip is associated with.
[i].status	object	
[i].status.projectID	integer	ID of the project this status is for.
[i].status.outOfSpace	boolean	True if the project has run out of space in the cloud.
[i].status.growingFile	boolean	True if the clip is still being recorded/modified.
[i].status.originalUploadState	string	Upload state of the original clip. Possible values are: Unqueued, Paused, Queued, Uploading, Uploaded, Failed, Unknown.
[i].status.proxyUploadState	string	Upload state of the proxy clip. Possible values are: Unqueued, Paused, Queued, Uploading, Uploaded, Failed, Unknown.
[i].status.originalClipTotalSize	integer	Total size of the original clip in bytes.
[i].status.proxyClipTotalSize	integer	Total size of the proxy clip in bytes.

Name	Type	Description
[i].status.originalClipCompletedSize	integer	Completed upload size of the original clip in bytes.
[i].status.proxyClipCompletedSize	integer	Completed upload size of the proxy clip in bytes.
[i].status.secsRemaining	integer	Estimated seconds remaining until upload is completed. Value of -1 means calculation in progress.

/cloud/projects/active

The value JSON returned via the eventResponse when the `/cloud/projects/active` property changes on the device:

Name	Type	Description
.libraryID	string	Cloud ID of the library containing this project.
.name	string	Name of the project.
.private	boolean	True if the project is private.
.shared	boolean	True if the project is shared.
.clips	array	List of clips associated with the project.
.clips[i]	string	
.status	object	
.status.numClipsRequested	integer	Number of clips requested for upload.
.status.numClipsComplete	integer	Number of clips that have completed uploading.
.status.uploadPercent	integer	Percentage of upload completion.
.status.numClipsPaused	integer	Number of clips paused in upload queue.
.status.outOfSpace	boolean	True if the project has run out of space in the cloud.
.status.secsRemaining	integer	Estimated seconds remaining until upload is completed. Value of -1 means calculation in progress.
.status.currentByteRate	integer	Current byte rate of the upload process.

/cloud/projects

The value JSON returned via the eventResponse when the `/cloud/projects` property changes on the device:

Name	Type	Description
	array	
[i]	object	
[i].libraryID	string	Cloud ID of the library containing this project.
[i].name	string	Name of the project.
[i].private	boolean	True if the project is private.
[i].shared	boolean	True if the project is shared.
[i].clips	array	List of clips associated with the project.
[i].clips[i]	string	
[i].status	object	
[i].status.numClipsRequested	integer	Number of clips requested for upload.
[i].status.numClipsComplete	integer	Number of clips that have completed uploading.
[i].status.uploadPercent	integer	Percentage of upload completion.

Name	Type	Description
[i].status.numClipsPaused	integer	Number of clips paused in upload queue.
[i].status.outOfSpace	boolean	True if the project has run out of space in the cloud.
[i].status.secsRemaining	integer	Estimated seconds remaining until upload is completed. Value of -1 means calculation in progress.
[i].status.currentByteRate	integer	Current byte rate of the upload process.

/livestreams/0

The value JSON returned via the eventResponse when the `/livestreams/0` property changes on the device:

Name	Type	Description
.status	string	Possible values are: Idle, Connecting, Streaming, Flushing, Interrupted, Disconnecting.
.bitrate	integer	Current bitrate (bps).
.effectiveVideoFormat	string	Effective video format for the livestream, serialised as a string.
.duration	integer	Current stream duration in seconds. Absent if livestream is idle.
.cache	integer	Current stream cache usage percentage.

/livestreams/0/activePlatform

The value JSON returned via the eventResponse when the `/livestreams/0/activePlatform` property changes on the device:

Name	Type	Description
.platform	string	Platform name.
.server	string	The platform's server name, or "Custom" when the URL is customizable.
.key	string	Stream key. Assumed to be empty if missing.
.passphrase	string	Passphrase. Only included for SRT streams.
.quality	string	Quality level name.
.url	string	Livestream destination. Only included when URL is customizable.

/livestreams/0/available

The value JSON returned via the eventResponse when the `/livestreams/0/available` property changes on the device:

Name	Type	Description
.available	boolean	True if livestreaming is currently available.
.reasons	array	Reasons why livestreaming is unavailable (empty if available is true).
.reasons[i]	string	Possible values are: not-supported, unsupported-format, in-playback, pending-format-transition, unexpected-reason.

/livestreams/platforms

The value JSON returned via the eventResponse when the `/livestreams/platforms` property changes on the device:

Name	Type	Description
	array	
[i]	string	Platform name.

/transports/0/prerecord

The value JSON returned via the eventResponse when the `/transports/0/prerecord` property changes on the device:

Name	Type	Description
.prerecording	boolean	True when prerecording is currently active (either from auto mode or one-shot trigger).
.duration	integer	The elapsed duration of the active prerecord buffer in seconds. Returns 0 when not prerecording.

/transports/0/prerecord/auto

The value JSON returned via the eventResponse when the `/transports/0/prerecord/auto` property changes on the device:

Name	Type	Description
.autoEnabled	boolean	Enable or disable automatic prerecord mode. When enabled, prerecord automatically activates when the device is ready.

/transports/0/prerecord/maxDuration

The value JSON returned via the eventResponse when the `/transports/0/prerecord/maxDuration` property changes on the device:

Name	Type	Description
.maxDuration	integer	Maximum prerecord duration in seconds. Must be one of the values returned by /transports/0/prerecord/supportedMaxDurations.

/transports/0/proxyRecording

The value JSON returned via the eventResponse when the `/transports/0/proxyRecording` property changes on the device:

Name	Type	Description
.enabled	boolean	True when proxy recording is enabled.

NEW! /system/dynamicRange

The value JSON returned via the eventResponse when the `/system/dynamicRange` property changes on the device:

Name	Type	Description
.dynamicRange	string	Currently selected dynamic range setting. Possible values are: Video, Film, Extended Video, PQ, HLG.

NEW! /system/supportedDynamicRanges

The value JSON returned via the eventResponse when the `/system/supportedDynamicRanges` property changes on the device:

Name	Type	Description
.supportedDynamicRanges	array	List of dynamic ranges supported by the device in its current configuration.
.supportedDynamicRanges[i]	string	Possible values are: Video, Film, Extended Video, PQ, HLG.

NEW! /system/colorScience

The value JSON returned via the eventResponse when the `/system/colorScience` property changes on the device:

Name	Type	Description
.colorScience	string	Currently selected colour science generation. Possible values are: Gen5, Gen6.

NEW! /system/supportedColorSciences

The value JSON returned via the eventResponse when the `/system/supportedColorSciences` property changes on the device:

Name	Type	Description
.supportedColorSciences	array	List of colour science generations supported by the device in its current configuration.
.supportedColorSciences[i]	string	Possible values are: Gen5, Gen6.

Blackmagic Bluetooth Camera Control

Blackmagic cameras with Bluetooth LE implement a variety of features and commands that allow users to control their cameras wirelessly. Developers have full access to these features for their custom applications.

The following services and characteristics describe the full range of communication options that are available to the developer.

Service: Device Information Service

UUID: 180A

Characteristics

Camera Manufacturer

UUID: 2A29

Read the name of the manufacturer (always “Blackmagic Design”).

Camera Model

UUID: 2A24

Read the name of the camera model (“URSA Mini”).

Service: Blackmagic Camera Service

UUID: 291D567A-6D75-11E6-8B77-86F30CA893D3

Characteristics

Outgoing Camera Control (encrypted)

UUID: 5DD3465F-1AEE-4299-8493-D2ECA2F8E1BB

Send Camera Control messages

These messages are identical to those described in the Blackmagic SDI Camera Control Protocol section below. Please read that section for a list of supported messages and required formatting information.

For an example of how packets are structured, please see the ‘example protocol packets’ section in this document.

Incoming Camera Control (encrypted)

UUID: B864E140-76A0-416A-BF30-5876504537D9

Request notifications for this characteristic to receive Camera Control messages from the camera.

These messages are identical to those described in the Blackmagic SDI Camera Control Protocol section below. Please read that section for a list of supported messages and required formatting information.

Timecode (encrypted)

UUID: 6D8F2110-86F1-41BF-9AFB-451D87E976C8

Request notifications for this characteristic to receive timecode updates.

Timecode (HH:MM:SS:mm) is represented by a 32-bit BCD number:
(eg. 09:12:53:10 = 0x09125310)

Camera Status (encrypted)

UUID: 7FE8691D-95DC-4FC5-8ABD-CA74339B51B9

Request notifications for this characteristic to receive camera status updates.

The camera status is represented by flags contained in an 8-bit integer:

None	= 0x00
Camera Power On	= 0x01
Connected	= 0x02
Paired	= 0x04
Versions Verified	= 0x08
Initial Payload Received	= 0x10
Camera Ready	= 0x20

Send a value of 0x00 to power a connected camera off.

Send a value of 0x01 to power a connected camera on.

Device Name

UUID: FFAC0C52-C9FB-41A0-B063-CC76282EB89C

Send a device name to the camera (max. 32 characters).

The camera will display this name in the Bluetooth Setup Menu.

Protocol Version

UUID: 8F1FD018-B508-456F-8F82-3D392BEE2706

Read this value to determine the camera's supported CCU protocol version.

NOTE Encrypted characteristics can only be used once a device has successfully bonded or paired with the Blackmagic Camera. Once a connection has been established, any attempt to write to an encrypted characteristic will initiate bonding. For example, writing a 'Camera Power On' (0x01) message to the Camera Status characteristic.

Once bonding is initiated, the camera will display a 6-digit pin in the Bluetooth Setup Menu. Enter this pin on your device to establish an encrypted connection. The device will now be able to read, write and receive notifications from encrypted characteristics.

Blackmagic SDI Camera Control Protocol

Version 1.6.2

If you are a software developer you can use the Blackmagic SDI to construct devices that integrate with our products. Here at Blackmagic Design, our approach is to open up our protocols and we eagerly look forward to seeing what you come up with!

Overview

This document describes an extensible protocol for sending a unidirectional stream of small control messages embedded in the non-active picture region of a digital video stream. The video stream containing the protocol stream may be broadcast to a number of devices. Device addressing is used to allow the sender to specify which device each message is directed to.

Assumptions

Alignment and padding constraints are explicitly described in the protocol document. Bit fields are packed from LSB first. Message groups, individual messages and command headers are defined as, and can be assumed to be, 32 bit aligned.

Blanking Encoding

A message group is encoded into a SMPTE 291M packet with DID/SDID x51/x53 in the active region of VANC line 16.

Message Grouping

Up to 32 messages may be concatenated and transmitted in one blanking packet up to a maximum of 255 bytes payload. Under most circumstances, this should allow all messages to be sent with a maximum of one frame latency.

If the transmitting device queues more bytes of message packets than can be sent in a single frame, it should use heuristics to determine which packets to prioritize and send immediately. Lower priority messages can be delayed to later frames, or dropped entirely as appropriate.

Abstract Message Packet Format

Every message packet consists of a three byte header followed by an optional variable length data block. The maximum packet size is 64 bytes.

Destination device (uint8)	Device addresses are represented as an 8 bit unsigned integer. Individual devices are numbered 0 through 254 with the value 255 reserved to indicate a broadcast message to all devices.
Command length (uint8)	The command length is an 8 bit unsigned integer which specifies the length of the included command data. The length does NOT include the length of the header or any trailing padding bytes.
Command id (uint8)	The command id is an 8 bit unsigned integer which indicates the message type being sent. Receiving devices should ignore any commands that they do not understand. Commands 0 through 127 are reserved for commands that apply to multiple types of devices. Commands 128 through 255 are device specific.
Reserved (uint8)	This byte is reserved for alignment and expansion purposes. It should be set to zero.

Command data (uint8[])	The command data may contain between 0 and 60 bytes of data. The format of the data section is defined by the command itself.
Padding (uint8[])	Messages must be padded up to a 32 bit boundary with 0x0 bytes. Any padding bytes are NOT included in the command length.

Receiving devices should use the destination device address and or the command identifier to determine which messages to process. The receiver should use the command length to skip irrelevant or unknown commands and should be careful to skip the implicit padding as well.

Defined Commands

Command 0 : change configuration

Category (uint8)	The category number specifies one of up to 256 configuration categories available on the device.
Parameter (uint8)	The parameter number specifies one of 256 potential configuration parameters available on the device. Parameters 0 through 127 are device specific parameters. Parameters 128 though 255 are reserved for parameters that apply to multiple types of devices.
Data type (uint8)	The data type specifies the type of the remaining data. The packet length is used to determine the number of elements in the message. Each message must contain an integral number of data elements.

Currently defined values are:

0: void/boolean	A void value is represented as a boolean array of length zero. The data field is a 8 bit value with 0 meaning false and all other values meaning true.
1: signed byte	Data elements are signed bytes
2: signed 16 bit integer	Data elements are signed 16 bit values
3: signed 32 bit integer	Data elements are signed 32 bit values
4: signed 64 bit integer	Data elements are signed 64 bit values
5: UTF-8 string	Data elements represent a UTF-8 string with no terminating character.

Data types 6 through 127 are reserved.

128: signed 5.11 fixed point	Data elements are signed 16 bit integers representing a real number with 5 bits for the integer component and 11 bits for the fractional component. The fixed point representation is equal to the real value multiplied by 2^11. The representable range is from -16.0 to 15.9995 (15 + 2047/2048).

Data types 129 through 255 are available for device specific purposes.

Operation type (uint8)	The operation type specifies what action to perform on the specified parameter. Currently defined values are:
0: assign value	The supplied values are assigned to the specified parameter. Each element will be clamped according to its valid range. A void parameter may only be 'assigned' an empty list of boolean type. This operation will trigger the action associated with that parameter. A boolean value may be assigned the value zero for false, and any other value for true.
1: offset/toggle value	Each value specifies signed offsets of the same type to be added to the current parameter values. The resulting parameter value will be clamped according to their valid range. It is not valid to apply an offset to a void value. Applying any offset other than zero to a boolean value will invert that value.
Operation types 2 through 127 are reserved.	
Operation types 128 through 255 are available for device specific purposes.	
Data (void)	The data field is 0 or more bytes as determined by the data type and number of elements.

The category, parameter, data type and operation type partition a 24 bit operation space.

Group	ID	Parameter	Type	Index	Minimum	Maximum	Interpretation
Lens	0.0	Focus	fixed16	–	0.0	1.0	0.0 = near, 1.0 = far
	0.1	Instantaneous autofocus	void	–	–	–	trigger instantaneous autofocus
	0.2	Aperture (f-stop)	fixed16	–	-1.0	16.0	Aperture Value (where fnumber = sqrt(2^AV))
	0.3	Aperture (normalised)	fixed16	–	0.0	1.0	0.0 = smallest, 1.0 = largest
	0.4	Aperture (ordinal)	int16	–	0	n	Steps through available aperture values from minimum (0) to maximum (n)
	0.5	Instantaneous auto aperture	void	–	–	–	trigger instantaneous auto aperture
	0.6	Optical image stabilisation	boolean	–	–	–	true = enabled, false = disabled
	0.7	Set absolute zoom (mm)	int16	–	0	max	Move to specified focal length in mm, from minimum (0) to maximum (max)
	0.8	Set absolute zoom (normalised)	fixed16	–	0.0	1.0	Move to specified focal length: 0.0 = wide, 1.0 = tele
	0.9	Set continuous zoom (speed)	fixed16	–	-1.0	+1.0	Start/stop zooming at specified rate: -1.0 = zoom wider fast, 0.0 = stop, +1 = zoom tele fast

Group	ID	Parameter	Type	Index	Minimum	Maximum	Interpretation
Video	1.0	Video mode	int8	[0] = frame rate	–	–	fps as integer (eg 24, 25, 30, 50, 60)
				[1] = M-rate	–	–	0 = regular, 1 = M-rate
				[2] = dimensions	–	–	0 = NTSC, 1 = PAL, 2 = 720, 3 = 1080, 4 = 2kDCI, 5 = 2k16:9, 6 = UHD, 7 = 3k Anamorphic, 8 = 4k DCI, 9 = 4k 16:9, 10 = 4.6k 2.4:1, 11 = 4.6k
				[3] = interlaced	–	–	0 = progressive, 1 = interlaced
				[4] = Color space	–	–	0 = YUV
	1.1	Gain (up to Camera 4.9)	int8		1	128	1x, 2x, 4x, 8x, 16x, 32x, 64x, 128x gain
	1.2	Manual White Balance	int16	[0] = color temp	2500	10000	Color temperature in K
			int16	[1] = tint	-50	50	tint
	1.3	Set auto WB	void	–	–	–	Calculate and set auto white balance
	1.4	Restore auto WB	void	–	–	–	Use latest auto white balance setting
	1.5	Exposure (us)	int32		1	42000	time in us
	1.6	Exposure (ordinal)	int16	–	0	n	Steps through available exposure values from minimum (0) to maximum (n)
	1.7	Dynamic Range Mode	int8 enum	–	0	2	0 = film, 1 = video, 2 = extended video
	1.8	Video sharpening level	int8 enum	–	0	3	0 = off, 1 = low, 2 = medium, 3 = high
	1.9	Recording format	int16	[0] = file frame rate	–	–	fps as integer (eg 24, 25, 30, 50, 60, 120)
				[1] = sensor frame rate	–	–	fps as integer, valid when sensor-off-speed set (eg 24, 25, 30, 33, 48, 50, 60, 120), no change will be performed if this value is set to 0
				[2] = frame width	–	–	in pixels
				[3] = frame height	–	–	in pixels
				[4] = flags	–	–	[0] = file-M-rate
					–	–	[1] = sensor-M-rate, valid when sensor-off-speed-set
					–	–	[2] = sensor-off-speed
					–	–	[3] = interlaced
					–	–	[4] = windowed mode
	1.10	Set auto exposure mode	int8	–	0	4	0 = Manual Trigger, 1 = Iris, 2 = Shutter, 3 = Iris + Shutter, 4 = Shutter + Iris
	1.11	Shutter angle	int32	–	100	36000	Shutter angle in degrees, multiplied by 100
	1.12	Shutter speed	int32	–	Current sensor frame rate	5000	Shutter speed value as a fraction of 1, so 50 for 1/50th of a second
	1.13	Gain	int8	–	-128	127	Gain in decibel (dB)
	1.14	ISO	int32	–	0	2147483647	ISO value
	1.15	Display LUT	int8	[0] = selected LUT	–	–	0 = None, 1 = Custom, 2 = film to video, 3 = film to extended video
				[1] = enabled or not	–	–	0 = Not enabled, 1 = Enabled
	1.16	ND Filter Stop	fixed16	[0] = stop	0.0	15.0	filter power, as f-stop
				[1] = display mode	–	–	0 = stop 1 = density 2 = transmittance

Group	ID	Parameter	Type	Index	Minimum	Maximum	Interpretation
Audio	2.0	Mic level	fixed16	–	0.0	1.0	0.0 = minimum, 1.0 = maximum
	2.1	Headphone level	fixed16	–	0.1	1.0	0.0 = minimum, 1.0 = maximum
	2.2	Headphone program mix	fixed16	–	0.1	1.0	0.0 = minimum, 1.0 = maximum
	2.3	Speaker level	fixed16	–	0.1	1.0	0.0 = minimum, 1.0 = maximum
	2.4	Input type	int8	–	0	3	0 = internal mic, 1 = line level input, 2 = low mic level input, 3 = high mic level input
	2.5	Input levels	fixed16	[0] ch0	0.0	1.0	0.0 = minimum, 1.0 = maximum
				[1] ch1	0.0	1.0	0.0 = minimum, 1.0 = maximum
	2.6	Phantom power	boolean	–	–	–	true = powered, false = not powered
Output	3.0	Overlay enables	uint16 bit field	[0] = bit field	–	–	bit flags: [0] = display status, [1] = display frame guides [2] = clean feed Some cameras don't allow separate control of frame guides and status overlays.
			uint16 bit field	[1] = target displays bit field	–	–	bit flags: [0] = LCD [1] = HDMI [2] = EVF [3] = Main SDI [4] = Front SDI
	3.1	Frame guides style (Camera 3.x)	int8	–	0	8	0 = HDTV, 1 = 4:3, 2 = 2.4:1, 3 = 2.39:1, 4 = 2.35:1, 5 = 1.85:1, 6 = thirds
	3.2	Frame guides opacity (Camera 3.x)	fixed16	–	0.1	1.0	0.0 = transparent, 1.0 = opaque
	3.3	Overlays (replaces .1 and .2 above from Cameras 4.0)	int8	[0] = frame guides style	–	–	0 = off, 1 = 2.4:1, 2 = 2.39:1, 3 = 2.35:1, 4 = 1.85:1, 5 = 16:9, 6 = 14:9, 7 = 4:3, 8 = 2:1, 9 = 4:5, 10 = 1:1
				[1] = frame guide opacity	0	100	0 = transparent, 100 = opaque
				[2] = safe area percentage	0	100	percentage of full frame used by safe area guide (0 means off)
				[3] = grid style	–	–	bit flags: [0] = display thirds, [1] = display cross hairs, [2] = display center dot, [3] = display horizon

Group	ID	Parameter	Type	Index	Minimum	Maximum	Interpretation
Display	4.0	Brightness	fixed16	–	0.0	1.0	0.0 = minimum, 1.0 = maximum
	4.1	Exposure and focus tools	uint16 bit field	[0] = bit field	–	–	bit flags: [0] = Zebra [1] = Focus Assist [2] = False Color
			uint16 bit field	[1] = target displays bit field	–	–	bit flags: [0] = LCD [1] = HDMI [2] = EVF [3] = Main SDI [4] = Front SDI
	4.2	Zebra level	fixed16	–	0.0	1.0	0.0 = minimum, 1.0 = maximum
	4.3	Peaking level	fixed16	–	0.0	1.0	0.0 = minimum, 1.0 = maximum
	4.4	Color bar enable	int8	–	0	30	0 = disable bars, 1-30 = enable bars with timeout (seconds)
	4.5	Focus Assist	int8	[0] = focus assist method	–	–	0 = Peak, 1 = Colored lines
				[1] = focus line color	–	–	0 = Red, 1 = Green, 2 = Blue, 3 = White, 4 = Black
	4.6	Program return feed enable	int8	–	0	30	0 = disable, 1-30 = enable with timeout (seconds)
	4.7	Timecode Source	signed byte	[0] = source	–	–	0 = Clip, 1 = Timecode
Tally	5.0	Tally brightness	fixed16	–	0.0	1.0	Sets the tally front and tally rear brightness to the same level. 0.0 = minimum, 1.0 = maximum
	5.1	Front tally brightness	fixed16	–	0.0	1.0	Sets the tally front brightness. 0.0 = minimum, 1.0 = maximum
	5.2	Rear tally brightness	fixed16	–	0.0	1.0	Sets the tally rear brightness. 0.0 = minimum, 1.0 = maximum Tally rear brightness cannot be turned off
Reference	6.0	Source	int8 enum	–	0	2	0 = internal, 1 = program, 2 = external
	6.1	Offset	int32	–	–	–	+/- offset in pixels

Group	ID	Parameter	Type	Index	Minimum	Maximum	Interpretation
Configuration	7.0	Real Time Clock	int32	[0] time	_	_	BCD - HHMMSSFF (UCT)
				[1] date	_	_	BCD - YYYYMMDD
	7.1	System language	string	[0-1]	_	_	ISO-639-1 two character language code
	7.2	Timezone	int32	_	_	_	Minutes offset from UTC
	7.3	Location	int64	[0] latitude	_	_	BCD - s0DDddddddddddd where s is the sign: 0 = north (+), 1 = south (-); DD degrees, ddddddddddd decimal degrees
				[1] longitude	_	_	BCD - sDDDddddddddddd where s is the sign: 0 = west (-), 1 = east (+); DDD degrees, ddddddddddd decimal degrees
Color Correction	8.0	Lift Adjust	fixed16	[0] red	-2.0	2.0	default 0.0
				[1] green	-2.0	2.0	default 0.0
				[2] blue	-2.0	2.0	default 0.0
				[3] luma	-2.0	2.0	default 0.0
	8.1	Gamma Adjust	fixed16	[0] red	-4.0	4.0	default 0.0
				[1] green	-4.0	4.0	default 0.0
				[2] blue	-4.0	4.0	default 0.0
				[3] luma	-4.0	4.0	default 0.0
	8.2	Gain Adjust	fixed16	[0] red	0.0	16.0	default 1.0
				[1] green	0.0	16.0	default 1.0
				[2] blue	0.0	16.0	default 1.0
				[3] luma	0.0	16.0	default 1.0
	8.3	Offset Adjust	fixed16	[0] red	-8.0	8.0	default 0.0
				[1] green	-8.0	8.0	default 0.0
				[2] blue	-8.0	8.0	default 0.0
				[3] luma	-8.0	8.0	default 0.0
	8.4	Contrast Adjust	fixed16	[0] pivot	0.0	1.0	default 0.5
				[1] adj	0.0	2.0	default 1.0
	8.5	Luma mix	fixed16	–	0.0	1.0	default 1.0
	8.6	Color Adjust	fixed16	[0] hue	-1.0	1.0	default 0.0
				[1] sat	0.0	2.0	default 1.0
	8.7	Correction Reset Default	void	–	–	–	reset to defaults

Group	ID	Parameter	Type	Index	Minimum	Maximum	Interpretation
Media	10.0	Codec	int8 enum	[0] = basic codec	–	–	0 = CinemaDNG, 1 = DNxHD, 2 = ProRes, 3 = Blackmagic RAW
				[1] = code variant	–	–	CinemaDNG: 0 = uncompressed, 1 = lossy 3:1, 2 = lossy 4:1
					–	–	ProRes: 0 = HQ, 1 = 422, 2 = LT, 3 = Proxy, 4 = 444, 5 = 444XQ
					–	–	Blackmagic RAW: 0 = Q0, 7 = Q1, 8 = Q3, 1 = Q5, 2 = 3:1, 3 = 5:1, 4 = 8:1, 5 = 12:1
	10.1	Transport mode	int8	[0] = mode	–	–	0 = Preview, 1 = Play, 2 = Record
				[1] = speed	–	–	-ve = multiple speeds backwards, 0 = pause, +ve = multiple speeds forwards
				[2] = flags	–	–	1<<0 = loop, 1<<1 = play all, 1<<5 = disk1 active, 1<<6 = disk2 active, 1<<7 = time-lapse recording
				[3] = slot 1 storage medium	–	–	0 = CFast card, 1 = SD, 2 = SSD Recorder
				[4] = slot 2 storage medium	–	–	0 = CFast card, 1 = SD, 2 = SSD Recorder
	10.2	Playback Control	int8 enum	[0] = clip	–	–	0 = Previous, 1 = Next
	10.5	Stream	bool	[0] = enabled	–	–	true = enabled, false = disabled
	10.6	Stream Information	void bool	[0] = enabled	–	–	true = enabled, false = disabled
	10.7	Stream Display 3D LUT	void bool	[0] = enabled	–	–	true = enabled, false = disabled

Group	ID	Parameter	Type	Index	Minimum	Maximum	Interpretation
PTZ Control	11.0	Pan/Tilt Velocity	fixed 16	[0] = pan velocity	-1.0	1.0	-1.0 = full speed left, 1.0 = full speed right
				[1] = tilt velocity	-1.0	1.0	-1.0 = full speed down, 1.0 = full speed up
	11.1	Memory Preset	int8 enum	[0] = preset command	–	–	0 = reset, 1 = store location, 2 = recall location
			int8	[1] = preset slot	0	5	–

Example Protocol Packets

Operation	Packet Length	Byte															
		0	1	2	3	4	5	6	7	8	9	10	11	12	13	14	15
		header command data															
		destination	length	command	reserved	category	parameter	type	operation								
trigger instantaneous auto focus on camera 4	8	4	4	0	0	0	1	0	0								
turn on OIS on all cameras	12	255	5	0	0	0	6	0	0	1	0	0	0				
set exposure to 10 ms on camera 4 (10 ms = 10000 us = 0x00002710)	12	4	8	0	0	1	5	3	0	0x10	0x27	0x00	0x00				
add 15% to zebra level (15 % = 0.15 f = 0x0133 fp)	12	4	6	0	0	4	2	128	1	0x33	0x01	0	0				
select 1080p 23.98 mode on all cameras	16	255	9	0	0	1	0	1	0	24	1	3	0	0	0	0	0
subtract 0.3 from gamma adjust for green & blue (-0.3 ~= 0xfd9a fp)	16	4	12	0	0	8	1	128	1	0	0	0x9a	0xfd	0x9a	0xfd	0	0
all operations combined	76	4	4	0	0	0	1	0	0	255	5	0	0	0	6	0	0
		1	0	0	0	4	8	0	0	1	5	3	0	0x10	0x27	0x00	0x00
		4	6	0	0	4	2	128	1	0x33	0x01	0	0	255	9	0	0
		1	0	1	0	24	1	3	0	0	0	0	0	4	12	0	0
		8	1	128	1	0	0	0x9a	0xfd	0x9a	0xfd	0	0				

Blackmagic Tally Control Protocol

Version 1.0 (30/04/14)

This section is for third party developers or anybody who may wish to add support for the Blackmagic Tally Control Protocol to their products or system. It describes the protocol for sending tally information embedded in the non-active picture region of a digital video stream.

Data Flow

A master device such as a broadcast switcher embeds tally information into its program feed which is broadcast to a number of slave devices such as cameras or camera controllers. The output from the slave devices is typically fed back to the master device, but may also be sent to a video monitor.

The primary flow of tally information is from the master device to the slaves. Each slave device may use its device id to extract and display the relevant tally information.

Slave devices pass through the tally packet on their output and update the monitor tally status, so that monitor devices connected to that individual output may display tally status without knowledge of the device id they are monitoring.

Assumptions

Any data alignment / padding is explicit in the protocol. Bit fields are packed from LSB first.

Blanking Encoding

One tally control packet may be sent per video frame. Packets are encoded as a SMPTE 291M packet with DID/SDID x51/x52 in the active region of VANC line 15. A tally control packet may contain up to 256 bytes of tally information.

Packet Format

Each tally status consists of 4 bits of information:

uint4

bit 0:	program tally status (0=off, 1=on)
bit 1:	preview tally status (0=off, 1=on)
bit 2-3:	reserved (0x0)

The first byte of the tally packet contains the monitor device tally status and a version number.

Subsequent bytes of the tally packet contain tally status for pairs of slave devices. The master device sends tally status for the number of devices configured/supported, up to a maximum of 510.

struct tally

uint8

bit 0:	monitor device program tally status (0=off, 1=on)
bit 1:	monitor device preview tally status (0=off, 1=on)
bit 2-3:	reserved (0b00)
bit 4-7:	protocol version (0b0000)

uint8[0]

bit 0:	slave device 1 program tally status (0=off, 1=on)
bit 1:	slave device 1 device preview tally status (0=off, 1=on)
bit 2-3:	reserved (0b00)
bit 4:	slave device 2 program tally status (0=off, 1=on)
bit 5:	slave device 2 preview tally status (0=off, 1=on)
bit 6-7:	reserved (0b00)

uint8[1]

bit 0: slave device 3 program tally status (0=off, 1=on)

bit 1: slave device 3 device preview tally status (0=off, 1=on)

bit 2-3: reserved (0b00)

bit 4: slave device 4 program tally status (0=off, 1=on)

bit 5: slave device 4 preview tally status (0=off, 1=on)

bit 6-7: reserved (0b00)

. . .

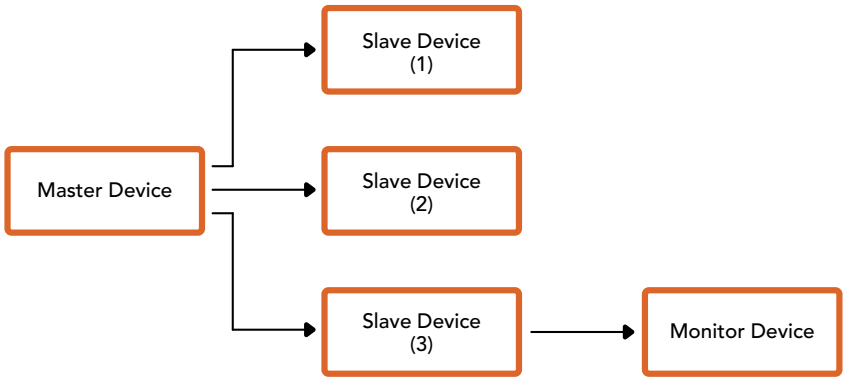

Byte	7 MSB	6	5	4	3	2	1	0 LSB
0	Version (0b0)	Version (0b0)	Version (0b0)	Version (0b0)	Reserved (0b0)	Reserved (0b0)	Monitor Preview	Monitor Program
1	Reserved (0b0)	Reserved (0b0)	Slave 1 Preview	Slave 1 Program	Reserved (0b0)	Reserved (0b0)	Slave 0 Preview	Slave 0 Program
2	Reserved (0b0)	Reserved (0b0)	Slave 3 Preview	Slave 3 Program	Reserved (0b0)	Reserved (0b0)	Slave 2 Preview	Slave 2 Program
3	...							

Help

The fastest way to obtain help is to go to the Blackmagic Design online support pages and check the latest support material available for your camera.

Blackmagic Design Online Support Pages

The latest manual, software and support notes can be found at the Blackmagic Design support center at www.blackmagicdesign.com/support.

Contacting Blackmagic Design Support

If you can't find the help you need in our support material, please use the 'Send us an email' button on the support page to email a support request. Alternatively, click on the 'Find your local support team' button on the support page and call your nearest Blackmagic Design support office.

Checking the Software Version Currently Installed

To check which version of Blackmagic Camera Setup utility software is installed on your computer, open the About Blackmagic Camera Setup utility window.

- On Mac, open Blackmagic Camera Setup utility from the Applications folder. Select About Blackmagic Camera Setup utility from the application menu to reveal the version number.
- On Windows, open Blackmagic Camera Setup utility from your Start menu or Start Screen. Click on the Help menu and select About Blackmagic Camera Setup utility to reveal the version number.

How to Get the Latest Software Updates

After checking the version of Blackmagic Camera Utility software installed on your computer, please visit the Blackmagic Design support center at www.blackmagicdesign.com/support to check for the latest updates. While it is usually a good idea to run the latest updates, it is wise to avoid updating any software if you are in the middle of an important project.

Regulatory Notices



Disposal of Waste of Electrical and Electronic Equipment Within the European Union.

The symbol on the product indicates that this equipment must not be disposed of with other waste materials. In order to dispose of your waste equipment, it must be handed over to a designated collection point for recycling. The separate collection and recycling of your waste equipment at the time of disposal will help conserve natural resources and ensure that it is recycled in a manner that protects human health and the environment. For more information about where you can drop off your waste equipment for recycling, please contact your local city recycling office or the dealer from whom you purchased the product.



This equipment has been tested and found to comply with the limits for a Class A digital device, pursuant to Part 15 of the FCC rules. These limits are designed to provide reasonable protection against harmful interference when the equipment is operated in a commercial environment. This equipment generates, uses, and can radiate radio frequency energy and, if not installed and used in accordance with the instructions, may cause harmful interference to radio communications. Operation of this product in a residential area is likely to cause harmful interference, in which case the user will be required to correct the interference at personal expense.

The operation of this equipment is subject to the following two conditions:

1. This equipment or device may not cause harmful interference.
2. This equipment or device must accept any interference received, including interference that may cause undesired operation.



R-R-BMD-20230906001
R-R-BMD-20240326001
R-R-BMD-20230906003
R-R-BMD-20230906004
R-R-BMD-20230906005
R-R-BMD-20230906006
R-R-BMD-20230906002
R-R-BMD-20200916001
R-R-BMD-20200916002
R-R-BMD-20260320001



ISED Canada Statement

This device complies with Canadian standards for Class A digital apparatus.

Any modifications or use of this product outside its intended use could void compliance to these standards.

Connection to HDMI interfaces must be made with high quality shielded HDMI cables.

This equipment has been tested for compliance with the intended use in a commercial environment. If the equipment is used in a domestic environment, it may cause radio interference.

WiFi and Bluetooth®

The product is a WiFi and Bluetooth wireless technology enabled product.

U.S.

Contains transmitter module FCC ID: 2A93QW2EA

Canada

Contains transmitter module IC: 32169-W2EA (pending approval)

Japan

Type certificate number: 003-220255 (Radio Law)

5GHz band (W52, W53): Indoor use only

Type certificate number: D220164003 (Telecommunication Business Law)

This equipment contains specified radio equipment that has been certified to the technical regulation conformity certification under the Radio and Telecommunication Business Law.

RF Exposure Information

This device has been tested and confirmed to meet the applicable RF exposure requirements.

This device contains a radio transmitter and receiver that are designed and manufactured to ensure that radio frequency (RF) emissions do not exceed the established safety limits for human exposure. These limits are part of international guidelines that set safe levels of RF energy exposure for the general population, with built-in safety margins to protect individuals of all ages and health conditions.

The exposure standard for wireless RF devices employs a unit of measurement known as the Specific Absorption Rate (SAR). For use on body, the SAR limit is 1.6 watts per kilogram in countries that set the limit averaged over 1 gram of tissue and 2.0 watts per kilogram in countries set the limit averaged over 10 grams of tissue. For the use on extremity/limbs, the SAR limit is 4.0 watts per kilogram in countries that set the limit averaged over 10g of tissue. Devices with SAR values at or below these limits are considered safe for the general public.

The maximum SAR values when operated as a handheld device in accordance with this manual are:

Blackmagic URSA Cine 12K LF
1.6W/kg (over 1g) SAR Limit
Body: 1.15W/kg

2.0W/kg (over 10g) SAR Limit
Body: 0.25W/kg

4.0W/kg (over 10g) SAR Limit
Extremity/Limbs: 3.59W/kg

Hereby, Blackmagic Design declares that the product is using 2.4GHz and 5 GHz bands, are in compliance with directive 2014/53/EU and Radio Equipment Regulations 2017.

Certification marks can be found by accessing the menu of the camera.

Select Menu > Setup > Regulatory Information > See Information

The full text of the EU declaration of conformity is available from compliance@blackmagicdesign.com

Safety Information

The supplied AC to 24V DC power supply for Blackmagic URSA Cine must be connected to a mains socket outlet with a protective earth connection.

No operator serviceable parts inside Blackmagic URSA Cine. Refer servicing to your local Blackmagic Design service center.

When connecting the input power connector to an external DC battery source, the supply wiring must include current limiting or fusing.

The wiring used should be marked VW-1 or comply with the relevant parts of IEC 60332 or IEC 60695".

We recommend that the DC source for this camera is 24V. If a 12V DC source is used, the wiring used should be sufficient for a current of 14A.

A B-Mount battery plate is provided with this product. We recommend the use of a 24V (28.8V) battery or dual voltage battery.

For a 12V (14.4V) battery, refer to your battery manual or markings to determine the Maximum Continuous Discharge Current. We recommend that this has a minimum rating of 12A.

State of California statement

This product can expose you to chemicals such as trace amounts of polybrominated biphenyls within plastic parts, which is known to the state of California to cause cancer and birth defects or other reproductive harm.

For more information go to www.P65Warnings.ca.gov.

European Office

Blackmagic Design Europe B.V.
Rijnlanderweg 766, Unit D
2132 NM Hoofddorp
NL

Blackmagic URSA Cine

During sunny conditions, consider shading of the camera to prevent exposure of the camera or Lithium battery to extended periods of sunlight. Keep Lithium batteries away from all sources of heat.

The 24V 'EXT' and 'RS' output connectors have shared capacity and are suitable to provide power to the third party accessories like follow focus motors. Please ensure the power consumption is less than 48W total.

Under certain conditions, continuous electrostatic discharge (ESD) applied to the handle of the CFexpress Module during active recording may cause the recording process to stop.

Warranty

Limited Warranty

Blackmagic Design warrants that this product will be free from defects in materials and workmanship for a period of 12 months from the date of purchase. If a product proves to be defective during this warranty period, Blackmagic Design, at its option, either will repair the defective product without charge for parts and labor, or will provide a replacement in exchange for the defective product.

In order to obtain service under this warranty, you the Customer, must notify Blackmagic Design of the defect before the expiration of the warranty period and make suitable arrangements for the performance of service. The Customer shall be responsible for packaging and shipping the defective product to a designated service center nominated by Blackmagic Design, with shipping charges pre paid. Customer shall be responsible for paying all shipping charges, insurance, duties, taxes, and any other charges for products returned to us for any reason.

This warranty shall not apply to any defect, failure or damage caused by improper use or improper or inadequate maintenance and care. Blackmagic Design shall not be obliged under this warranty: a) to repair damage resulting from attempts by personnel other than Blackmagic Design representatives to install, repair or service the product, b) to repair damage resulting from improper use or connection to incompatible equipment, c) to repair any damage or malfunction caused by the use of non Blackmagic Design parts or supplies, or d) to service a product that has been modified or integrated with other products when the effect of such a modification or integration increases the time or difficulty of servicing the product.

Exposing URSA Viewfinder to direct sunlight could damage the viewfinder display as the viewfinder optics act as a magnifying glass. Image retention or burn-in could happen on OLED panels when static or high contrast images, such as frame guides, are displayed on the panels for extended periods. To avoid this, ensure the IR sensor for face detection is not covered deliberately and disconnect the viewfinder when not in use for prolonged periods. Image retention is not covered by this product warranty.

THIS WARRANTY IS GIVEN BY BLACKMAGIC DESIGN IN LIEU OF ANY OTHER WARRANTIES, EXPRESS OR IMPLIED. BLACKMAGIC DESIGN AND ITS VENDORS DISCLAIM ANY IMPLIED WARRANTIES OF MERCHANTABILITY OR FITNESS FOR A PARTICULAR PURPOSE. BLACKMAGIC DESIGN'S RESPONSIBILITY TO REPAIR OR REPLACE DEFECTIVE PRODUCTS DURING THE WARRANTY PERIOD IS THE WHOLE AND EXCLUSIVE REMEDY PROVIDED TO THE CUSTOMER. BLACKMAGIC DESIGN WILL NOT BE LIABLE FOR ANY INDIRECT, SPECIAL, INCIDENTAL OR CONSEQUENTIAL DAMAGES IRRESPECTIVE OF WHETHER BLACKMAGIC DESIGN OR THE VENDOR HAS ADVANCE NOTICE OF THE POSSIBILITY OF SUCH DAMAGES. BLACKMAGIC DESIGN IS NOT LIABLE FOR ANY ILLEGAL USE OF EQUIPMENT BY CUSTOMER. BLACKMAGIC IS NOT LIABLE FOR ANY DAMAGES RESULTING FROM USE OF THIS PRODUCT. USER OPERATES THIS PRODUCT AT OWN RISK.

© Copyright 2026 Blackmagic Design. All rights reserved. 'Blackmagic Design', 'URSA', 'DeckLink', 'HDLink', 'Workgroup Videohub', 'Multibridge Pro', 'Multibridge Extreme', 'Intensity' and 'Leading the creative video revolution' are registered trademarks in the US and other countries. All other company and product names may be trademarks of the respective companies with which they are associated.

The Bluetooth® word mark and logos are registered trademarks owned by Bluetooth SIG, Inc. and any use of such marks by Blackmagic Design is under license. Other trademarks and trade names are those of the respective owners.